Draft

Renewable Placer: Waste Action Plan Environmental Impact Report Appendices

Western Placer Management Authority
Project No. P2683386
October 29, 2021

CELEBRATING 40 YEARS OF SERVICE
WPWMA
Est. 1978

Jacobs

Appendix C
Air Quality

Appendix C.1
Methodology for Air Quality and Greenhouse Gas Impact Analysis

Jacobs

Renewable Placer

Methodology for Air Quality and Greenhouse Gas Impact Analysis

Draft

June 17, 2020

Western Placer Waste Management Authority

Renewable Placer

Document Title:	Methodology for Air Quality and Greenhouse Gas Impact Analysis
Revision:	Rev 0
Document Status:	Draft
Date:	June 17, 2020
Client Name:	Western Placer Waste Management Authority
Project Manager:	Janet Goodrich
Authors:	Elizabeth Schwing and Pamela Vanderbilt
File Name:	WPWMA Air Quality Methodology_Draft_06_17_2020

Jacobs Engineering Group Inc.

2485 Natomas Park Drive, Suite 600
Sacramento, California 95833-2937
United States
T +1.916.920.0300
F +1.916.920.8463
www.jacobs.com

© Copyright 2019 Jacobs Engineering Group Inc. The concepts and information contained in this document are the property of Jacobs. Use or copying of this document in whole or in part without the written permission of Jacobs constitutes an infringement of copyright.

Limitation: This document has been prepared on behalf of, and for the exclusive use of Jacobs' client, and is subject to, and issued in accordance with, the provisions of the contract between Jacobs and the client. Jacobs accepts no liability or responsibility whatsoever for, or in respect of, any use of, or reliance upon, this document by any third party.

Contents

1. Introduction 1
2. Emission Calculation Methodology 3
2.1 Construction Emissions 3
2.1.1 Construction Vehicle Exhaust Emissions 3
2.1.2 Construction Fugitive Dust Emissions 3
2.2 Operation Emissions 4
2.2.1 Operation Vehicle Exhaust Emissions 4
2.2.2 Operation Fugitive Dust Emissions 5
2.2.3 Fugitive Landfill Gas Emissions 5
2.2.4 Landfill Gas to Energy Plant Exhaust Emissions 5
2.2.5 Flare Exhaust Emissions 6
2.2.6 Compost Facility Process Emissions 6
2.2.7 Generator Exhaust Emissions 6
2.2.8 MRF Process Emissions 6
2.2.9 Fuel Storage and Dispensing and Equipment Maintenance Emissions 7
2.3 GHG Emissions Estimation and Analysis 7
2.3.1 Emissions Estimation Procedure 7
2.3.2 Landfill Gas Emissions 8
2.3.3 Vehicle and Equipment Emissions 8
2.3.4 Electricity Generation and Consumption 8
2.4 Waste Relocation Emissions 9
3. Health Risk Assessment 10
4. CO Hotspot Analysis 12
5. Odor Impact Assessment 13
6. Health Impacts from Criteria Pollutants and Precursors (In Response to the Friant Ranch Decision) 14
7. References 15

1. Introduction

This document describes proposed methods to estimate emissions of criteria pollutants, toxic air contaminants (TACs), and greenhouse gases (GHGs) and assess potential impacts to air quality and human health associated with the Renewable Placer: Waste Action Plan (proposed project). This methodology reflects the Placer County Air Pollution Control District (PCAPCD) 2017 CEQA Air Quality Handbook (PCAPCD 2017) and accepted industry standards.

PCAPCD defines criteria air pollutants as air pollutants for which acceptable levels of exposure can be determined and for which an ambient air quality standard has been set. Examples include: ozone, carbon monoxide (CO), nitrogen dioxide (NO_2), sulfur dioxide (SO_2), particulate matter 10 micrometers or less in diameter (PM_{10}), and particulate matter 2.5 micrometers or less in diameter ($PM_{2.5}$) (PCAPCD 2017). GHGs include carbon dioxide (CO_2), methane (CH_4), nitrous oxide (N_2O), hydrofluorocarbons (HFCs), perfluorocarbons (PFCs), and sulfur hexafluoride (SF_6), as defined by California Assembly Bill 32 (PCAPCD 2017). TACs are defined as airborne pollutants that may be expected to result in "an air pollutant which may cause or contribute to an increase in mortality or in serious illness, or which may pose a present or potential hazard to human health" per the California Health and Safety Code §39655 (PCAPCD 2017).

The proposed project consists of two separate plan concepts, Plan Concept 1 and Plan Concept 2, which will be analyzed at an equal level. Plan Concept 1 and Plan Concept 2 include similar project elements, but the locations, timing, and characteristics of the elements differ. Proposed project elements are divided into solid waste project elements, complementary/programmatic elements, and supporting elements.

Solid waste project elements are the project elements that are needed for Western Placer Waste Management Authority (WPWMA) to continue providing solid waste management services in the near and long term. These project elements include:

- Continued Operation of the Materials Recovery Facility (MRF) Building
- Expanded and Redesigned Compost Operations
- Expanded and Redesigned Construction and Demolition Waste Operations
- Expanded and Redesigned Public Waste Drop-Off Area Operations
- Expanded Landfill Disposal Capacity (includes expanded landfill footprint, increased daily tons received, and increased daily vehicle trips)
- Excavation, Relocation and Reburial of Solid Waste from Older, Unlined Sections of the Landfill

Complementary/programmatic elements are project elements that are not specifically required to provide continued solid waste management services to Participating Agencies but important to achieve other project goals. These project elements include:

- Compatible Technologies
- Pilot Study Area
- University Research Area
- Landfill Gas (LFG) to Compressed Natural Gas (CNG) Area

Supporting elements are the project elements that are required to support both the solid waste project and complementary/programmatic elements. These project elements include:

- Recovered Materials Storage Areas
- Stormwater Ponds
- Road Crossing

- Maintenance Areas
- Administrative Buildings
- Facility Parking
- Household Hazardous Waste (HHW) Facility Operations
- Entrance Facilities
- Wastewater and Water Supply Infrastructure
- Continued Operation of the Existing Landfill Gas-to-Energy Plant
- Site Perimeter Infrastructure

With the noted exception, solid waste project elements and supporting elements include those activities directly under WPWMA's control[1]. These elements will be evaluated at a project-specific level of detail. Complementary and programmatic elements include those activities that may require third-party involvement and are not fully defined at this time. Complementary/programmatic elements will be evaluated at a program level.

Emissions will be estimated for the incremental increases in activity over time associated with Plan Concept 1 and Plan Concept 2 solid waste project elements and supporting elements. Baseline activity levels and future activity levels for the proposed project will be quantified in order to assess the change in activity associated with each plan concept. Emissions will then be estimated for the incremental increase in activity. The baseline year will be 2018, with the project timeframe spanning from the baseline year through 2050. Note that some activities, such as landfilling, are expected to extend beyond the project timeframe, but the analysis will focus on impacts through 2050 due to increasing uncertainty associated with operations occurring more than 30 years in the future.

To answer the California Environmental Quality Act (CEQA) questions and evaluate the significance of impacts for air quality and GHGs associated with the proposed project, estimates of construction and operational emissions will be compared to the PCAPCD CEQA significance thresholds for the project construction phase, project operational phase, and cumulative-level emissions, respectively, as described in the 2017 CEQA Air Quality Handbook (PCAPCD 2017).

For air quality or GHG impacts identified as significant or potentially significant, all feasible mitigation measures will be identified. The PCAPCD 2017 CEQA Air Quality Handbook includes appendices that list recommended construction and operational mitigation measures for criteria pollutants and GHGs (PCAPCD 2017). Additionally, the California Emissions Estimator Model (CalEEMod) includes mitigation measures, which are largely based on the California Air Pollution Control Officers Association (CAPCOA) *Quantifying Greenhouse Gas Mitigation Measures* document (CAPCOA 2010, 2017). When feasible, the effectiveness of mitigation measures will be assessed in comparison with applicable air quality thresholds of significance.

[1] The existing landfill gas-to-energy plant is owned and operated by Energy 2001, Inc. under a long-term lease agreement with the WPWMA. The WPWMA does not have direct control over this operation.

2. Emission Calculation Methodology

Emissions of criteria pollutants, TACs, GHGs will be estimated for construction and operation of the proposed project. Emissions from construction of the proposed solid waste project elements and supporting elements would result from on-road vehicle exhaust, off-road equipment exhaust, and fugitive dust. Operation-related emissions would result from on-road vehicle exhaust, off-road equipment exhaust, fugitive dust, flare operation, landfill gas-to-energy (LFGTE) plant operation, fugitive landfill gas (LFG), waste transfer and processing activities, composting, generator operation, fuel storage and dispensing, and maintenance operations. Excavation of existing solid waste would be performed using different methods, over different durations, and at different times for each Plan Concept; therefore, waste excavation is discussed separately in Section 2.4.

2.1 Construction Emissions

Emissions of CO, nitrogen oxides (NOx), reactive organic gases (ROG), PM_{10}, $PM_{2.5}$, TACs, and GHGs would be generated during construction of new site facilities and landfill modules. Activities during construction of the proposed facilities would include demolition, site preparation, grading, excavation, road construction, foundation construction, and building construction. Construction activities during landfill module construction would include excavation, placement of liner materials, and partial module closure. Onsite and offsite construction emissions would fall into two categories: vehicle and construction equipment exhaust, and fugitive dust generated by vehicle travel and soil disturbing activities. During onsite construction, activities would be assumed to occur during daylight hours, 5 days per week, year-round. Although activities may actually occur 7-days a week at times, concentrating activities to 5 days a week represents a more conservative, worse-case daily emission rate.

Projected project schedules for Plan Concept 1 and Plan Concept 2 identify the expected timing and duration of construction of proposed project elements. The projected schedules for each Plan Concept will be analyzed to identify "peak" years when anticipated construction activities could result in the highest levels of daily emissions. The hypothetical "maximum" daily emissions for each peak year will be conservatively estimated by adding the highest daily emissions for each project element that would be constructed in that year.[2] Maximum daily construction emissions for each Plan Concept will be determined on a pollutant-specific basis and compared to the PCAPCD CEQA significance thresholds.

2.1.1 Construction Vehicle Exhaust Emissions

Construction equipment exhaust emissions of CO, NOx, ROG, PM_{10}, $PM_{2.5}$, TACs, and GHGs will be estimated using emission factors taken from the Appendix D of the CalEEMod User's Guide (CAPCOA 2017). The construction equipment and service trucks used for routine onsite travel will be considered onsite emission sources, while worker commute vehicles and construction material haul trucks will be considered offsite emission sources. On-road vehicle exhaust emissions will be estimated using average emission factors for the PCAPCD from ARB's emission inventory tool ("EMission FACtor," EMFAC2017). Trip distances representing PCAPCD default values for employee commutes and material haul distances will be taken from Appendix D of the CalEEMod User's Guide (CAPCOA 2017).

2.1.2 Construction Fugitive Dust Emissions

Fugitive dust emissions would result from vehicle travel on unpaved and paved roads, and soil disturbing activities such as site grading, soil and waste excavation, and stockpile movement. Emission factors from EMFAC2017 will be used to estimate fugitive emissions from tire and brake wear. Fugitive dust emissions from vehicle travel on unpaved and paved roads will be estimated using emission factors from Appendix D of the CalEEMod User's Guide and United States Environmental Protection Agency (EPA)-approved emission factors

[2] Note that hypothetical maximum daily emissions are not expected to occur but will be estimated for comparison to the CEQA significance thresholds to allow conservative evaluation of worst-case potential impacts.

and methodology published in AP-42 (CAPCOA 2017; EPA 2006, 2011). Onsite travel distances will be estimated based on figures showing locations of proposed project elements.

Fugitive dust emissions from soil disturbance (e.g., grading and excavating activities) will be estimated using emission factors from Appendix D of the CalEEMod User's Guide (CAPCOA 2017).

2.2 Operation Emissions

Emissions of CO, NOx, ROG, PM_{10}, $PM_{2.5}$, TACs, and GHGs would result from operation of the proposed solid waste project elements and supporting elements. Proposed project operation emissions would be generated from routine maintenance activities, worker commute trips, haul truck trips (commercial and self-haul), off-road equipment, fugitive LFG, LFG flares, LFGTE plant operation, generators, composting, soil disturbance, waste recovery operations, and fuel storage and dispensing. Operation activities at the landfill and waste recovery facilities are assumed to occur 10 hours per day, 7 days per week, and 52 weeks per year. The gas collection system and the LFGTE plant are operated at all times, and fugitive LFG and compost process emissions are emitted continuously, 24 hours per day, 7 days per week, and 52 weeks per year.

Operation emissions for the incremental increases in activity for both Plan Concepts will be calculated for the project buildout year of 2050, when maximum operational capacity is expected. The hypothetical "maximum" daily operation emissions will be conservatively estimated by identifying the representative operating scenario that would result in the highest daily emissions for each Plan Concept based on maximum expected daily activity levels in the project buildout year.[3] Note that the maximum expected daily activity levels for operation of each project element would not necessarily occur on the same day, which will be reflected in the representative operating scenario. The hypothetical "maximum" daily operation emissions would represent the operating scenario resulting in the highest daily emissions based on combined activity levels for all project elements. Project-related increases in maximum daily operation emissions will be compared to the PCAPCD CEQA significance thresholds. Long-term exposures and health risks from TACs will be analyzed using the 30-year-average annual emissions associated with the increases in project-related activities. This approach will account for a 30-yr exposure duration for nearby residents consistent with Office of Environmental Health Hazard Assessment (OEHHA) guidance (OEHHA 2015). The health risk assessment approach is described in further detail in Section 3.

2.2.1 Operation Vehicle Exhaust Emissions

Operation equipment exhaust emissions of CO, NOx, ROG, PM_{10}, $PM_{2.5}$, TACs, and GHGs will be estimated using emission factors taken from the Appendix D of the CalEEMod User's Guide (CAPCOA 2017). On-road vehicle exhaust emissions will be estimated using EMFAC2017 average emission factors for the PCAPCD.

On-road vehicle counts for the project buildout year will be based on actual vehicles recorded in the 2018 baseline year and an assumed annual increase to account for waste growth and facility usage over time. The average waste haul truck trip distance will be based on trip origin data collected at the WPWMA scale houses for the 2018 baseline year and adjusted to account for waste growth over time based on population forecast data provided in general plans for the surrounding areas. Default worker commute trip distance values for PCAPCD will be taken from Appendix D of the CalEEMod User's Guide (CAPCOA 2017).

Vehicle traffic related to transport of the solid waste associated with the proposed project includes both commercial haulers and self-haul vehicles. Commercial haulers bring collected waste to the site in medium to heavy duty haul trucks. Self-haul traffic includes small businesses (i.e., landscaper and contractors) and the public. Once onsite, dedicated operational on-road vehicles and off-road equipment move materials between the various waste recovery and disposal facilities. The net change in vehicle traffic for the

[3] Note that hypothetical maximum daily emissions are not expected to occur but will be estimated for comparison to the CEQA significance thresholds to capture worst case potential impacts.

"maximum" day of operations will be used to calculate worst-case emissions for averaging periods of 24 hours or less. Emissions for long term averaging periods (annual or monthly) will be calculated based on the net change in average daily vehicle traffic.

2.2.2 Operation Fugitive Dust Emissions

Fugitive dust emissions would result from vehicle travel on unpaved and paved roads, soil disturbing activities such as stockpile movement and application of daily cover on the landfill working face, waste relocation, and operation of waste recovery facilities such as the construction and demolition waste processing facility, MRF, and compost facility.

Emission factors from EMFAC2017 will be used to estimate fugitive emissions from vehicle tire and brake wear. Fugitive dust emissions from vehicle travel on unpaved and paved roads will be estimated using emission factors from Appendix D of the CalEEMod User's Guide and EPA-approved emission factors and methodology published in AP-42 (CAPCOA 2017; EPA 2006, 2011). Onsite travel distances will be estimated based on figures showing locations of proposed project elements.

Fugitive dust emissions from soil and waste disturbance and management will be estimated using emission factors from Appendix D of the CalEEMod User's Guide (CAPCOA 2017), EPA's AP-42: Compilation of Air Pollutant Emissions Factors, and guidance published by other air districts.

2.2.3 Fugitive Landfill Gas Emissions

The gases generated from the aerobic decomposition of organic waste and the anaerobic bacterial digestion of buried waste are called landfill gas (LFG). At landfills equipped with LFG collection systems (such as the WPWMA's landfill), fugitive LFG results from emissions of LFG not captured by the collection system.

Total LFG generation associated with the proposed expanded waste disposal operations will be estimated using the EPA's LFG generation model (LandGEM), with appropriate input values for in-place refuse mass, the refuse decay constant, and ultimate methane generation rate. Input values will be calibrated with site-specific LFG recovery data and collection efficiency estimates.

Future LFG generation associated with the proposed project will be estimated assuming that the composition of the waste stream will change during the project timeframe, consistent with Senate Bill (SB) 1383 organics diversion requirements. The change in composition will be captured as a single step change, with the current waste stream considered representative through 2025 and a reduced organics waste stream considered representative from 2026 through 2050. Two parameters used by the LandGEM model to estimate LFG generation, L_0 (potential methane generation capacity) and k (methane generation rate), will be adjusted to account for the change in composition of the waste stream. Note that the LandGEM model does not allow multiple L_0 and k entries to account for changes over time; therefore, results for two separate modeled scenarios (current waste stream through 2025 and reduced organics waste stream from 2026 through 2050) will be compiled to estimate total LFG generation for the proposed project.

The LFG collection efficiency for the 2018 baseline year will be calculated based on an average of the actual volume of LFG collected at the site compared to modeled LFG generation rates for 2014 through 2018. The LFG collection efficiency for the proposed project will be based on the LFG collection system and cover proposed as part of each Plan Concept. Site-specific LFG sampling data will be used to estimate concentrations of GHGs and TACs in the LFG.

2.2.4 Landfill Gas to Energy Plant Exhaust Emissions

Emissions from the LFGTE plant would result from combustion of collected LFG to generate electricity. In the 2018 baseline year, the LFGTE plant received all collected LFG with the exception of a nominal volume sent to the flare, and still had unused capacity. It is assumed that additional LFG generated and collected as part of the proposed project will be sent to the LFGTE plant until the plant reaches capacity. Therefore, until the LFGTE plant reaches capacity, the LFG flowrate to the LFGTE plant associated with the proposed project will be determined

based on the delta between the baseline LFG flowrate (to the LFGTE plant and flare) and the total collected LFG. Note that the proposed project does not include an increase in LFGTE plant capacity, and it is assumed that LFG generated in exceedance of LFGTE plant capacity would be sent to a complementary use element, such as an LFG-to-compressed natural gas (CNG) plant, or flares.

Criteria pollutant, TAC, and GHG emissions from the LFGTE plant will be estimated based on site-specific LFG sampling data and the control efficiency of the plant.

2.2.5 Flare Exhaust Emissions

Emissions from the LFG flares would result from combustion of collected LFG and small amounts of propane (as necessary to support flare start-up operations). Criteria pollutant, TAC, and GHG emissions from the flares will be estimated based on site-specific LFG sampling data and the control efficiency of each flare.

With the exception of a small, consistent flow of approximately 150 standard cubic feet per minute (SCFM) to the WPWMA flare (which is operated like a pilot light), all collected LFG will be assumed to go to the LFGTE plant, until the LFGTE plant reaches capacity. At that time, additional LFG will be assumed to go to the flares for the purposes of analysis given the uncertainty associated with proposed complementary use elements such as an LFG-to-CNG plant.

The flow rate of LFG to the flares will be determined based on modeled rates of LFG generation and LFG collection efficiency, excluding the baseline LFG flowrate to the flares and the LFG flowrate to the LFGTE plant at full capacity. WPWMA anticipates that future excess LFG will be used for other renewable energy or fuel projects, but those potential projects are not yet fully developed; therefore, they will not be included in this detailed analysis.

2.2.6 Compost Facility Process Emissions

Process emissions associated with operation of the proposed compost facility will be estimated using recommended emission factors from the *Air Resources Board (ARB) Emissions Inventory Methodology for Composting Facilities* (ARB 2015). The ARB methodology includes emissions factors for estimating ROG and ammonia (NH_3) emissions from stockpiles and the composting process. Emissions will be estimated based on type of composting process, facility throughput, feedstock types, and control systems in place.

Baseline conditions will be evaluated based on existing compost facility practices. A reduction in the per ton emissions is expected in the future, as compost operations will change over from open windrowing to aerated static pile methods. While the details of the future compost facility are unknown, it is assumed that the expanded composting operations will include a positive aerated static pile (ASP) system for the near term that could transition to a negative ASP system with an extended bed configuration for active composting and large static piles for curing. Emission control efficiencies for ASP systems will be obtained from the *ARB Emissions Inventory Methodology for Composting Facilities* (ARB 2015).

2.2.7 Generator Exhaust Emissions

Generator exhaust emissions would result from operation of gasoline- and diesel-fueled generators used as portable or emergency sources of power. Emissions of CO, NOx, ROG, PM_{10}, $PM_{2.5}$, TACs, and GHGs from diesel-fueled generators will be estimated using emission factors taken from the Appendix D of the CalEEMod User's Guide (CAPCOA 2017). CalEEMod assumes all generators would be diesel fueled, so emissions from gasoline-fueled generators will be estimated using emissions factors taken from EPA's AP-42: Compilation of Air Pollutant Emissions Factors (EPA 1996).

2.2.8 MRF Process Emissions

Waste conveyance and sorting processes in the MRF may result in fugitive dust emissions and odors inside and outside the building enclosure. The MRF building is open on one side and equipped with 24 unfiltered roof vents,

which could result in the release to atmosphere of a portion of the fugitive dust and odors generated inside the building.

Emission factors used in other environmental documents for MRF facilities, such as the Final Environmental Impact Report (FEIR) for the Community Recycling and Resource Recovery Facility in Sun Valley, CA and the air quality assessment for a Materials Recovery Facility and Transfer Station in Azusa, CA (Community Recycling and Resource Recovery, Inc., 2012; Waste Management, 2010), will be used to estimate emissions associated with the increase in MRF activities under the proposed project.

2.2.9 Fuel Storage and Dispensing and Equipment Maintenance Emissions

Emissions associated with fuel storage and dispensing will be calculated using approved emission factors and the estimated project-related increases in fuel to be stored and dispensed in the buildout year. Similarly, emissions for equipment maintenance will be calculated for project-related increases in solvent use and maintenance activities in the buildout year.

2.3 GHG Emissions Estimation and Analysis

This section summarizes the methodology and assumptions that will be used to calculate the GHG emissions associated with the proposed project. Earlier sections of this methodology discussed calculation of GHG emissions associated with fuel combustion in equipment and vehicles during construction and operation. This section expands that discussion to include the other types of GHG emissions that will be estimated and analyzed for the proposed project.

To evaluate the significance of potential impacts associated with GHG emissions, the total unmitigated project-related GHG emissions will be compared to the PCAPCD GHG significance thresholds (PCAPCD 2017). If the GHG emissions exceed the thresholds, feasible mitigation measures for the GHG emissions will be evaluated to reduce the proposed project's GHG impacts.

Additionally, CEQA requires that the proposed project evaluate the potential for conflicts with any applicable plans, policies or regulations adopted for the purpose of reducing emissions of GHGs. To evaluate the significance of potential project-related impacts associated with this CEQA criterion, the proposed project will be assessed for consistency with the following:

- applicable California laws, plans, policies, and regulations (e.g., AB 876, SB 1383, AB 1826, AB 939), and
- the Placer County Sustainability Plan (Placer County 2020), including the solid waste-related GHG emission reduction measures and goals in that plan.

2.3.1 Emissions Estimation Procedure

Impacts of the proposed project will be evaluated using the principles of the GHG Protocol Project Accounting Standard (GHG Protocol Initiative, undated). Emissions will be estimated for the incremental increases in activity over time associated with Plan Concept 1 and Plan Concept 2 when compared to the baseline activity levels.

This analysis will predict the primary and secondary effects of the incremental increases in activities associated with the proposed project and the GHG sources and sinks associated with those activities. A primary effect is the intended change caused by a project activity and a secondary effect is an unintended change resulting from a project activity. Secondary effects include one-time effects (i.e., construction emissions) and upstream and downstream effects (i.e., recurring changes associated with inputs to the project activity or products from the project activity) (GHG Protocol Initiative, undated).

For the proposed project, GHG emissions associated with project-related increases in LFG production and combustion, fuel use in vehicles and equipment, electricity use, and other factors will be estimated. The production of LFG and the GHG emissions associated with collection and combustion of that gas will continue well into the future. Under the proposed project, increased diversion and composting of organic and food wastes

will result in GHG reductions compared to landfilling of these wastes, and those emissions benefits will be quantified. The additional GHG impacts that would result from approval and implementation of the proposed project will be represented by the total primary and secondary emissions associated with the incremental increases in activity over time from the proposed project at buildout compared to the baseline conditions.

Project-related GHG emissions are evaluated in terms of carbon dioxide equivalent (CO_2e) emissions. The 2017 PCAPCD CEQA Handbook defines CO_2e as a "metric used to compare emissions of various greenhouse gases. It is the mass of carbon dioxide that would produce the same estimated radiative forcing as a given mass of another greenhouse gas. Carbon dioxide equivalents are computed by multiplying the mass of the gas emitted by its global warming potential" (PCAPCD 2017). GHG impacts for the proposed project will be estimated using United Nations Intergovernmental Panel on Climate Change (IPCC) Fifth Assessment Report (SAR5) global warming potential (GWP) values. Therefore, a GWP of 28 will be used for methane when estimating project-related GHG emissions.

2.3.2 Landfill Gas Emissions

Several factors will be considered in estimation of GHG emissions associated with LFG combustion and releases of fugitive LFG. These include the rate at which LFG is generated by the waste, the chemical composition of the LFG, the capture efficiency of the gas collection system, the methane destruction efficiency for the flares and LFGTE plant, and the fraction of methane which is oxidized to CO_2 as the uncaptured gas passes through the landfill cover. References such as WPWMA's *e-GGRT Reporting Year 2018 GHG Summary Report*, submitted to the EPA to comply with the Mandatory GHG Reporting Rule (40 Code of Federal Regulations [CFR] 98 Subpart HH[4]), will be used to define these parameters for estimation of project-related emissions (WPWMA 2019). Priority will be given to available site-specific information on LFG, but if additional information is needed to fill gaps, other sources include default waste composition fractions and GHG emission factors from Appendix D of the CalEEMod User's Guide (CAPCOA 2017), EPA's AP-42: Compilation of Air Pollutant Emissions Factors, and guidance published by ARB, CalRecycle, and other air districts.

2.3.3 Vehicle and Equipment Emissions

As described in earlier sections, the estimation of emissions from operation and construction of the proposed project will include the GHG emissions from off-road equipment such as dozers, scrapers, and compactors. In addition, GHG emissions will be estimated for project-related fuel combustion in waste collection vehicles, on-site vehicles, and employee commute vehicles.

Other non-vehicular GHG emission sources associated with the proposed project will include fuel combustion by lawnmowers, leaf blowers and other small utility equipment, and other small sources. CalEEMod will be used to provide emission estimation for these types of area sources based on land use types.

2.3.4 Electricity Generation and Consumption

Some of the LFG collected by the facility is used to generate electricity. Project-related buildings and equipment, such as the gas collection system, will use electricity purchased from the grid. The purchased electricity is generated from a variety of sources, including fossil fuels. The GHG emissions associated with the increased generation and use of electricity by the proposed project will be included in the GHG analysis.

The electricity generated at the LFGTE plant is considered to be a renewable fuel source, and the CO_2 emissions are biogenic because they are LFG-derived. The GHG benefits of this power generation are conveyed with the renewable energy credits (RECs) which are sold from the project. Therefore, in accordance with the relevant

[4] Under the EPA Mandatory Reporting of GHGs rule, owners or operators of municipal solid waste (MSW) landfills must report emissions from MSW landfills and all other source categories located at the landfill for which methods are defined in the rule. Owners or operators are required to collect emission data; calculate GHG emissions; and follow the specified procedures for quality assurance, missing data, recordkeeping, and reporting per the requirements of 40 CFR Part 98 Subpart HH – Municipal Solid Waste Landfills (EPA, 2018).

accounting standards, this analysis will quantify the GHG impacts of all power consumed onsite as if it will be purchased from the grid, which is a conservative approach.

The GHG emissions from electricity use will be calculated using emission factors for electricity generation from EPA's eGRID database for Placer County. Information on electricity use in 2018 baseline year, and an assumed annual increase to account for operational increases due to waste growth, will be used to estimate electricity use at buildout.

2.4 Waste Relocation Emissions

Both Plan Concepts include excavation of existing solid waste in unlined landfill cells and relocation of that waste to a new lined landfill cell. Excavation of existing solid waste would be performed using different methods, over different durations, and at different times for each Plan Concept. Sources of emissions associated with waste relocation would include fugitive LFG, off-road equipment exhaust, on-road vehicle exhaust, fugitive dust, and possible use of electricity to power a conveyor system. Emissions from these sources would be estimated as described in Sections 2.1 to 2.3.

For Plan Concept 1, relocation of existing solid waste would be performed as part of regular site operations. Other project elements would not be dependent upon completion of waste relocation, allowing the work to be performed over an extended period of time by operations staff using off-road equipment already onsite, as available. Waste relocation would be done later in the analysis timeframe, and would not coincide with proposed project construction activities or major operational changes. Due to the nature of this project element under Plan Concept 1, waste relocation would be considered an operational source for Plan Concept 1. Emissions from waste relocation would be estimated and included with emissions from other operational sources for comparison to the PCAPCD CEQA thresholds when determining significance for Plan Concept 1.

For Plan Concept 2, relocation of existing solid waste would be performed at the beginning of the project timeframe as a separate construction project. Construction of other project elements would be dependent upon completion of waste relocation, requiring that the work be performed over a much shorter timeframe by a separate work crew. This activity would be much more equipment intensive under Plan Concept 2 due to the need for rapid completion, and alternative waste transfer methods, such as use of an electric conveyor system, would be considered. Due to the nature of this project element under Plan Concept 2, waste relocation would be considered a construction source for Plan Concept 2. Emissions from waste relocation would be estimated and included with emissions from other construction sources for comparison to the PCAPCD CEQA thresholds when determining significance for Plan Concept 2.

3. Health Risk Assessment

A health risk assessment (HRA) will be prepared to predict potential human health risks from exposure of offsite receptors to estimated TAC emissions from the proposed project. The human health risk categories to be evaluated include individual excess lifetime cancer risk, noncancer health effects from chronic (long-term) exposure, and noncancer health effects from acute (short-term) exposure. The HRA will be performed in accordance with Appendix G of the 2017 PCAPCD CEQA Air Quality Handbook, titled "*Preparing a Health Risk Assessment for Land Use Projects*" (PCAPCD 2017), and the latest guidance from OEHHA, outlined in the "*Guidance Manual for Preparation of Health Risk Assessments*" (OEHHA 2015).

In accordance with the PCAPCD CEQA Air Quality Handbook (PCAPCD 2017), impacts associated with construction and operation of the proposed project will be characterized. TAC emission sources associated with the proposed project include: stationary LFG flares and LFGTE plant, fugitive LFG, on-road vehicle exhaust, off-road equipment exhaust, generator exhaust, fuel storage and dispensing, routine maintenance operations, fugitive dust, and fugitive emissions from composting and other waste recovery operations. For dispersion and risk modeling, the emissions estimates will be divided into short-term emissions (for acute risks) and long-term emissions (for cancer and chronic risks). The 2050 proposed project buildout year will be used for the short-term emissions analysis, because it represents the highest level of emissions from fugitive LFG and LFG combustion for the proposed project during the project timeframe. Note that short-term emissions due to construction and operation vehicle exhaust (emitted as diesel particulate matter [DPM]) will not be included because acute health values are not available for DPM. Long-term emissions impacts will be analyzed using the 30-year-average annual emissions.

The AERMOD air dispersion model will be used to predict pollutant concentrations at specific receptor locations representing residents, workers, and sensitive populations near the proposed project site. Receptor locations will be identified according to OEHHA guidance to permit the estimation and evaluation of predicted pollutant concentrations and impacts associated with the proposed project. AERMOD modeling results will then be imported into ARB's most recent HARP2 Risk Module. The HARP2 Risk Module uses AERMOD- predicted pollutant concentrations, exposure assumptions, and approved health values from OEHHA to predict potential health impacts in terms of excess lifetime cancer risk, acute hazard index (HIA), and chronic hazard index (HIC).

The HRA will evaluate potential health impacts associated with the following exposure routes: inhalation, dermal absorption, and ingestion of homegrown produce, soil, and mother's milk. The exposure duration for cancer risks at residential and sensitive receptors is assumed to be 24 hours per day continuously for 30 years. For cancer risks at workplace receptors, the exposure duration is assumed to be 8 hours per day, 5 days per week, for 25 years. The OEHHA recommended age-sensitivity factors (OEHHA 2015) will be incorporated into the residential health risk assessment.

Chronic risks will be assessed by comparing the predicted annual TAC ground level concentrations (the potential exposure levels) to the chronic reference exposure levels (RELs) developed by OEHHA to obtain the HIC. The acute risks will be assessed by comparing the predicted 1-hour maximum TAC ground level concentrations with the acute RELs developed by OEHHA to obtain the HIA by target organ.

Potential cancer and non-cancer (chronic and acute) health risks will be characterized for hypothetical receptors at locations where the highest levels of exposures to TAC emissions from the proposed project are predicted to occur. The location for the hypothetical maximally exposed individual (MEI) will be selected from the modeled receptor grids for residential and workplace receptors. The location for the residential MEI (MEIR) will be selected from receptors modeled in residential areas in the facility vicinity, and the workplace MEI (MEIW) will be selected from receptors modeled in commercial areas near the facility.

The receptors used in the risk assessment for the cumulative analysis will differ from those used in the proposed project analysis. In addition to receptors identified for the proposed project analysis, the

cumulative analysis will include receptors for proposed and approved area plan developments, such as the Sunset Area Plan and Placer Ranch Specific Plan.

Results of the risk assessment will be summarized, and the predicted cancer and noncancer health risks associated with human exposure to TAC emissions from the proposed project will be compared to the applicable PCAPCD significance thresholds. Any significant impacts will be identified, along with feasible mitigation measures and an evaluation of their benefits.

4. CO Hotspot Analysis

The CO hotspot analysis for the proposed project will tier off of the CO hotspot analysis for the Sunset Area Plan FEIR (Placer County 2019). Because the Sunset Area Plan FEIR evaluated the CO hotspot effects of cumulative buildout within the Sunset Area, which included buildout of the WPWMA properties, no additional CO hotspot analysis is assumed to be necessary.

5. Odor Impact Assessment

Potential odor impacts will be evaluated in accordance with the 2017 PCAPCD CEQA Air Quality Handbook, which indicates that potential odor impacts should be acknowledged and discussed so that mitigation measures may be identified. The 2017 PCAPCD CEQA Air Quality Handbook indicates that one of the most important factors influencing odor impacts is the distance between the odor source and potential receptors (i.e., the buffer zone or setback). A greater buffer zone between the source and receptors results in a lower odor impact. The PCAPCD guidance lists a recommended odor screening distance of 1 mile for sanitary landfills and 2 miles for composting facilities. While not the only factor affecting potential odor impacts, the size of the proposed project buffer zone will be compared to the recommended odor screening distances as part of the odor impact analysis. The odor impact significance determination will be made in consideration of all recommended parameters, such as buffer distance, wind conditions and prevailing wind direction, and the facility's odor complaint history.

A Site Wide Odor Plan (SWOP) is currently under development and will include odor control measures proposed for implementation as part of the proposed project. Odor control measures identified in the SWOP will be described as part of the odor impact evaluation and taken into consideration when determining significance. If odor impacts are determined to be potentially significant after consideration of the SWOP, any additional mitigation measures determined to be feasible will be applied per CEQA requirements.

6. Health Impacts from Criteria Pollutants and Precursors (In Response to the Friant Ranch Decision)

The CEQA analysis will include discussion of the following:

- Health effects associated with exposure to criteria pollutants (potential references: ARB, EPA, Centers for Disease Control and Prevention, and American Lung Association), and EPA's and ARB's use of health studies to establish ambient air quality standards for criteria pollutants.
- Input from PCAPCD and Sacramento Metropolitan Air Quality Management District, as well as other agencies evaluating the impacts of the Friant Ranch legal findings on CEQA analyses and findings.
- Regarding the Friant Ranch Decision, the discussion of Standards of Significance for the proposed project will be modeled after the discussion of Standards of Significance in the FEIR for the Sunset Area Plan/Placer Ranch Specific Plan, to be consistent with that document and to make it clear that PCAPCD's thresholds are ultimately tied to public health (Placer County 2019).

7. References

California Air Pollution Control Officers Association (CAPCOA). 2010. *Quantifying Greenhouse Gas Mitigation Measures*. August.

California Air Pollution Control Officers Association (CAPCOA). 2017. *California Emissions Estimator Model (CalEEMod) User's Guide*. November.

California Air Resources Board (ARB). 2015. *ARB Emissions Inventory Methodology for Composting Facilities*. March.

Community Recycling and Resource Recovery, Inc., 2012. Final Environmental Impact Report for the Sun Valley - La Tuna Canyon Community Plan Area Community Recycling and Resource Recovery Facility. October.

GHG Protocol Initiative. Undated. *The GHG Protocol for Project Accounting*.

Niemeier et al. 1997. University of California, Davis. *Transportation Project-Level Carbon Monoxide Protocol*. December.

Office of Environmental Health Hazard Assessment (OEHHA). 2015. *Risk Assessment Guidelines: Guidance Manual for Preparation of Health Risk Assessments*. February.

Placer County Air Pollution Control District (PCAPCD). 2016a. *Review of Land Use Projects Under CEQA Policy*.

Placer County Air Pollution Control District (PCAPCD). 2016b. *California Environmental Quality Act Thresholds of Significance Justification Report*.

Placer County Air Pollution Control District (PCAPCD). 2017. *CEQA Air Quality Handbook*.

Placer County, Community Development Resource Agency, Planning Services Division (Placer County). 2019. *Final Environmental Impact Report for the Sunset Area Plan/Placer Ranch Specific Plan*. October.

Placer County, Community Development Resource Agency (Placer County). 2020. *Placer County Sustainability Plan*. January.

United States Environmental Protection Agency (EPA). 1995. AP 42, Fifth Edition, Compilation of Air Pollutant Emission Factors. Chapter 13.2.3, Heavy Construction Operations. January.

United States Environmental Protection Agency (EPA). 1996. AP-42, Fifth Edition, Compilation of Air Pollutant Emission Factors. Chapter 3.3, Gasoline and Diesel Industrial Engines. October.

United States Environmental Protection Agency (EPA). 2006. AP 42, Fifth Edition, Compilation of Air Pollutant Emission Factors. Chapter 13.2.4, Aggregate Handling and Storage Piles. November.

United States Environmental Protection Agency (EPA). 2006. AP-42, Fifth Edition, Compilation of Air Pollutant Emission Factors. Chapter 13.2.2, Unpaved Roads. November.

United States Environmental Protection Agency (EPA). 2011. AP 42, Fifth Edition, Compilation of Air Pollutant Emission Factors. Chapter 13.2.1, Paved Roads. January.

United States Environmental Protection Agency (EPA). 2018. *Municipal Solid Waste Landfills: Subpart HH, Greenhouse Gas Reporting Program*. February.

Waste Management, 2010. Air Quality Assessment for the Azusa Materials Recovery Facility and Transfer Station. City of Azusa. December 22.

Western Placer Waste Management Authority (WPWMA). 2019. *e-GGRT Reporting Year 2018 GHG Summary Report*. March.

Appendix C.2
Air Quality Emission Calculations: Criteria Pollutants, Greenhouse Gases, and Toxic Air Contaminants

NET Annual Emissions for Operational Year 2050
Plan Concept 1: Tons per Year (TPY)

Operational Year 2050-Baseline	Onsite Roads	Offsite Roads	Offroad Equipment	MSW Landfill Operation	Wind Erosion	Composting Ops	MRF Ops	C&D Wood Chip / Grind / Crush	Gasoline Generators	LFGTE Engines	Flares	Landfill Gas Fugitive	Electricity	Total (lbs/yr)	Total (tons/yr)
PM_{10}	55,78	0,77	0,09	2,92	0,31	1,08	1,33	2,09	0,00	0,01	0,95			130 636,65	65,32
$PM_{2.5}$	12,77	0,17	0,09	1,40	0,05	0,36	0,37	0,51	0,00	0,01	0,95			33 332,60	16,67
CO	0,39	1,36	23,51						0,01	55,43	5,61	0,29		173 183,22	86,59
NOx	1,14	3,63	3,91						0,01	13,30	1,68			47 365,91	23,68
SOx	0,00	0,01	0,05						0,00	0,04	1,87			3 966,58	1,98
VOC	0,01	0,08	0,00			-19,67			0,01	29,93	1,28	3,76		30 798,74	15,40
GHG															
Non-biogenic CO_2	4,86E+02	1,56E+03	5,69E+03						5,76E+00		1,63E+03		1,091E+03	2,093E+07	10 466
Biogenic CO_2						-4,39E+02				8,42E+03	3,02E+03	1,221E+03		2,444E+07	12 220
CH_4	1,43E-03	5,87E-03	1,77E-01			-8,87E+00			2,46E-04	5,18E-01	6,01E+00	4,448E+02	1,764E-01	8,857E+05	443
N_2O	5,54E-02	1,82E-01	7,94E-02			-6,65E-01			4,91E-05	1,02E-01	2,00E-02		2,139E-02	-4,111E+02	-0,21
Non-biogenic CO_2e	5,01E+02	1,61E+03	5,72E+03			-4,25E+02			5,78E+00	4,15E+01	1,81E+03	1,25E+04	1,10E+03	4,562E+07	22 811
Biogenic CO_2e						-4,39E+02				8,42E+03	3,02E+03	1,22E+03		2,444E+07	12 220
TACs															
Ammonia						1,60E+01								3,209E+04	16,05
Isopropyl Alcohol						-1,98E+01								-3,959E+04	-19,80
Methanol						-5,98E+00								-1,197E+04	-5,98
Naphthalene						-2,34E-01								-4,679E+02	-0,23
Acetaldehyde						-6,55E-02			2,85E-05					-1,310E+02	-0,07
Acrolein									3,44E-06					6,882E-03	0,00
Formaldehyde									4,39E-05					8,779E-02	0,00
PAH									6,25E-06					1,250E-02	0,00
1,1,1-Trichloroethane (methyl chloroform)										2,43E-04	6,63E-05	1,67E-03		3,952E+00	0,00
1,1,2,2-Tetrachloroethane										1,27E-04	3,47E-05	8,74E-04		2,072E+00	0,00
1,1-Dichloroethane										7,94E-04	2,17E-04	5,45E-03		1,293E+01	0,01
1,1-Dichloroethene										9,66E-05	2,64E-05	6,63E-04		1,572E+00	0,00
1,2-Dichloroethane (Ethylene Dichloride)										1,29E-04	3,51E-05	8,83E-04		2,094E+00	0,00
1,2-Dichloropropane										2,81E-05	7,68E-06	1,93E-04		4,582E-01	0,00
Acrylonitrile										2,07E-05	8,47E-07	1,42E-04		3,272E-01	0,00
Benzene									3,47E-05	8,22E-04	3,37E-05	5,65E-03		1,307E+01	0,01
Carbon Disulfide										2,64E-04	1,08E-05	1,81E-03		4,173E+00	0,00
Carbon Tetrachloride										1,17E-05	3,18E-06	8,01E-05		1,899E-01	0,00
Carbonyl Sulfide										1,51E-04	6,18E-06	1,04E-03		2,386E+00	0,00
Chlorobenzene										2,77E-04	7,56E-05	1,90E-03		4,505E+00	0,00
Chloroethane (Ethyl Chloride)										1,67E-04	4,56E-05	1,15E-03		2,719E+00	0,00
Chloroform										2,71E-05	7,41E-06	1,86E-04		4,421E-01	0,00
Dichloromethane (Methylene Chloride)										3,12E-03	8,53E-04	2,14E-02		5,084E+01	0,03
Ethylbenzene										7,80E-03	3,20E-04	5,36E-02		1,234E+02	0,06
Hexane										2,17E-03	8,88E-05	1,49E-02		3,430E+01	0,02
Mercury (Total)*										2,27E-05	8,66E-06	4,36E-06		7,134E-02	0,00
Methyl Ethyl Ketone										8,24E-03	3,38E-04	5,66E-02		1,304E+02	0,07
Methyl Isobutyl Ketone										8,13E-04	3,33E-05	5,59E-03		1,287E+01	0,01
Perchloroethylene (Tetrachloroethylene)										2,14E-03	5,85E-04	1,47E-02		3,488E+01	0,02
Toluene									1,52E-05	2,53E-02	1,04E-03	1,74E-01		4,009E+02	0,20
Trichloroethylene (Trichloroethene)										9,69E-04	2,65E-04	6,65E-03		1,577E+01	0,01
Vinyl Chloride										7,29E-04	1,99E-04	5,01E-03		1,187E+01	0,01
Xylenes									1,06E-05	1,91E-02	7,81E-04	1,31E-01		3,015E+02	0,15
Diesel Exhaust PM	2,209E-03	9,421E-03	8,507E-02											1,934E+02	0,10
Hydrochloric Acid (HCl)**										1,043E+00	3,990E-01			2,885E+03	1,44
Total TAC	2,21E-03	9,42E-03	8,51E-02	0,00E+00	0,00E+00	-1,00E+01	0,00E+00	0,00E+00	1,43E-04	1,12E+00	4,04E-01	5,05E-01		-1,58E+04	-7,91

Jacobs

NET Annual Emissions for Operational Year 2050
Plan Concept 1: Metric tons per Year (MT/yr)

Operational Year 2050-Baseline	Onsite Roads	Offsite Roads	Offroad Equipment	Composting Ops	Gasoline Generators	LFGTE Engines	Flares	Landfill Gas Fugitive	Electricity	Total (MT/yr)
GHG										
Non-biogenic CO_2	441,1	1 413	5 166		5,2		1 480		989	9 495
Biogenic CO_2				-398		7 641	2 736	1 107		11 086
CH_4	0,00	0,01	0,16	-8,05	0,00	0,47	5,45	403,55	0,16	401,75
N_2O	0,05	0,16	0,07	-0,60	0,00	0,09	0,02		0,02	-0,19
Non-biogenic CO_2e	454,4	1 457	5 190	-385,26	5,2	37,6	1 637,54	11 299,30	998,99	20 694,14
Biogenic CO_2e				-398,33		7 640,97	2 735,99	1 107,24		11 085,86

NET Annual Emissions for Operational Year 2050
Plan Concept 2: Tons per Year (TPY)

Operational Year 2050-Baseline	Onsite Roads	Offsite Roads	Offroad Equipment	MSW Spread/ Compact/ Exc/ Daily Cover	Wind Erosion	Composting Ops	MRF Ops	C&D Wood Chip / Grind / Crush	Gasoline Generators	LFGTE Engines	Flares	Landfill Gas Fugitive	Electricity	Total (lbs/yr)	Total (tons/yr)
PM_{10}	36,02	0,77	0,09	2,92	0,31	1,08	1,33	2,09	0,00	0,01	0,84			90 899,24	45,45
$PM_{2.5}$	8,68	0,17	0,09	1,40	0,05	0,36	0,37	0,51	0,00	0,01	0,84			24 940,39	12,47
CO	0,28	1,36	23,51						0,01	55,43	4,97	0,27		171 645,80	85,82
NOx	0,54	3,63	3,91						0,01	13,30	1,49			45 775,09	22,89
SOx	0,00	0,01	0,05						0,00	0,04	1,65			3 536,63	1,77
VOC	0,01	0,08	0,00			-19,67			0,01	29,93	1,13	3,54		30 072,90	15,04
GHG															
Non-biogenic CO_2	2,81E+02	1,56E+03	5,69E+03						5,76E+00		1,87E+03		1,091E+03	2,101E+07	10 504
Biogenic CO_2						-4,39E+02				8,42E+03	3,46E+03	1,282E+03		2,546E+07	12 730
CH_4	1,08E-03	5,87E-03	1,77E-01			-8,87E+00			2,46E-04	5,18E-01	6,90E+00	4,671E+02	1,764E-01	9,321E+05	466
N_2O	2,80E-02	1,82E-01	7,94E-02			-6,65E-01			4,91E-05	1,02E-01	2,30E-02		2,139E-02	-4,599E+02	-0,23
Non-biogenic CO_2e	2,89E+02	1,61E+03	5,72E+03			-4,25E+02			5,78E+00	4,15E+01	2,07E+03	1,31E+04	1,10E+03	4,698E+07	23 492
Biogenic CO_2e						-4,39E+02				8,42E+03	3,46E+03	1,28E+03		2,546E+07	12 730
TACs															
Ammonia						1,60E+01								3,209E+04	16,05
Isopropyl Alcohol						-1,98E+01								-3,959E+04	-19,80
Methanol						-5,98E+00								-1,197E+04	-5,98
Naphthalene						-2,34E-01								-4,679E+02	-0,23
Acetaldehyde						-6,55E-02			2,85E-05					-1,310E+02	-0,07
Acrolein									3,44E-06					6,882E-03	0,00
Formaldehyde									4,39E-05					8,779E-02	0,00
PAH									6,25E-06					1,250E-02	0,00
1,1,1-Trichloroethane (methyl chloroform)										2,43E-04	5,87E-05	1,57E-03		3,748E+00	0,00
1,1,2,2-Tetrachloroethane										1,27E-04	3,08E-05	8,24E-04		1,964E+00	0,00
1,1-Dichloroethane										7,94E-04	1,92E-04	5,14E-03		1,226E+01	0,01
1,1-Dichloroethene										9,66E-05	2,34E-05	6,26E-04		1,491E+00	0,00
1,2-Dichloroethane (Ethylene Dichloride)										1,29E-04	3,11E-05	8,33E-04		1,985E+00	0,00
1,2-Dichloropropane										2,81E-05	6,81E-06	1,82E-04		4,345E-01	0,00
Acrylonitrile										2,07E-05	7,51E-07	1,34E-04		3,109E-01	0,00
Benzene									3,47E-05	8,22E-04	2,98E-05	5,33E-03		1,243E+01	0,01
Carbon Disulfide										2,64E-04	9,57E-06	1,71E-03		3,965E+00	0,00
Carbon Tetrachloride										1,17E-05	2,82E-06	7,55E-05		1,800E-01	0,00
Carbonyl Sulfide										1,51E-04	5,47E-06	9,77E-04		2,267E+00	0,00
Chlorobenzene										2,77E-04	6,69E-05	1,79E-03		4,272E+00	0,00
Chloroethane (Ethyl Chloride)										1,67E-04	4,04E-05	1,08E-03		2,578E+00	0,00
Chloroform										2,71E-05	6,57E-06	1,76E-04		4,192E-01	0,00
Dichloromethane (Methylene Chloride)										3,12E-03	7,55E-04	2,02E-02		4,821E+01	0,02
Ethylbenzene										7,80E-03	2,83E-04	5,06E-02		1,173E+02	0,06
Hexane										2,17E-03	7,87E-05	1,40E-02		3,259E+01	0,02
Mercury (Total)*										2,27E-05	7,67E-06	4,11E-06		6,887E-02	0,00
Methyl Ethyl Ketone										8,24E-03	2,99E-04	5,34E-02		1,239E+02	0,06
Methyl Isobutyl Ketone										8,13E-04	2,95E-05	5,27E-03		1,223E+01	0,01
Perchloroethylene (Tetrachloroethylene)										2,14E-03	5,18E-04	1,39E-02		3,308E+01	0,02
Toluene									1,52E-05	2,53E-02	9,20E-04	1,64E-01		3,809E+02	0,19
Trichloroethylene (Trichloroethene)										9,69E-04	2,34E-04	6,28E-03		1,496E+01	0,01
Vinyl Chloride										7,29E-04	1,76E-04	4,72E-03		1,125E+01	0,01
Xylenes									1,06E-05	1,91E-02	6,92E-04	1,23E-01		2,865E+02	0,14
Diesel Exhaust PM	1,471E-03	9,421E-03	8,507E-02											1,919E+02	0,10
Hydrochloric Acid (HCl)**										1,043E+00	3,534E-01			2,793E+03	1,40
Total TAC	1,47E-03	9,42E-03	8,51E-02	0,00E+00	0,00E+00	-1,00E+01	0,00E+00	0,00E+00	1,43E-04	1,12E+00	3,58E-01	4,77E-01		-1,60E+04	-7,99

Jacobs

NET Annual Emissions for Operational Year 2050
Plan Concept 2: Metric tons per Year (MT/yr)

Operational Year 2050-Baseline	Onsite Roads	Offsite Roads	Offroad Equipment	Composting Ops	Gasoline Generators	LFGTE Engines	Flares	Landfill Gas Fugitive	Electricity	Total (MT/yr)
GHG										
Non-biogenic CO_2	255,14	1 412,96	5 165,92		5,22		1 700,39		989,36	9 529,00
Biogenic CO_2				-398,33		7 640,97	3 143,14	1 162,75		11 548,52
CH_4	0,00	0,01	0,16	-8,05	0,00	0,47	6,26	423,78	0,16	422,79
N_2O	0,03	0,16	0,07	-0,60	0,00	0,09	0,02		0,02	-0,21
Non-biogenic CO_2e	261,90	1 456,77	5 189,51	-385,26	5,24	37,65	1 881,23	11 865,76	998,99	21 311,78
Biogenic CO_2e				-398,33		7 640,97	3 143,14	1 162,75		11 548,52

NET Daily Emissions for Operational Year 2050
Plan Concept 1: Pounds per Day (lb/day)

Operational Day 2050-Baseline	Onsite Roads	Offsite Roads	Offroad Equipment	MSW Spread/ Compact/ Exc/ Daily Cover	Wind Erosion	Composting Ops	MRF Ops	C&D Wood Chip / Grind / Crush	Gasoline Generators	LFGTE Engines	Flares	Landfill Gas Fugitive	Total (lb/day)
PM_{10}	391,8	5,4	0,7	28,7	1,7	10,6	13,1	20,3	0,1	0,0	5,2		477,7
$PM_{2.5}$	89,7	1,2	0,7	13,8	0,3	3,5	2,0	5,4	0,1	0,0	5,2		121,9
CO	2,7	9,5	193,3						0,3	303,7	30,7	1,6	541,9
NOx	8,0	25,5	32,1						0,5	72,9	9,2		148,3
SOx	0,0	0,1	0,4						0,1	0,2	10,2		11,1
VOC	0,1	0,6	5,3			-193,4			0,7	164,0	7,0	20,6	4,8
TACs													
Ammonia						1,58E+02							157,7233
Isopropyl Alcohol						-1,95E+02							-194,5823
Methanol						-5,88E+01							-58,8208
Naphthalene						-2,30E+00							-2,2995
Acetaldehyde						-6,44E-01			1,43E-03				-0,6424
Acrolein									1,72E-04				0,0002
Formaldehyde									2,19E-03				0,0022
PAH									3,12E-04				0,0003
1,1,1-Trichloroethane (methyl chloroform)										1,33E-03	1,51E-05	3,81E-04	0,0017
1,1,2,2-Tetrachloroethane										6,97E-04	7,93E-06	2,00E-04	0,0009
1,1-Dichloroethane										4,35E-03	4,95E-05	1,25E-03	0,0056
1,1-Dichloroethene										5,29E-04	6,02E-06	1,51E-04	0,0007
1,2-Dichloroethane (Ethylene Dichloride)										7,05E-04	8,02E-06	2,02E-04	0,0009
1,2-Dichloropropane										1,54E-04	1,75E-06	4,41E-05	0,0002
Acrylonitrile										1,13E-04	1,93E-07	3,24E-05	0,0001
Benzene									1,74E-03	4,50E-03	7,69E-06	1,29E-03	0,0075
Carbon Disulfide										1,45E-03	2,47E-06	4,14E-04	0,0019
Carbon Tetrachloride										6,39E-05	7,27E-07	1,83E-05	0,0001
Carbonyl Sulfide										8,27E-04	1,41E-06	2,37E-04	0,0011
Chlorobenzene										1,52E-03	1,73E-05	4,34E-04	0,0020
Chloroethane (Ethyl Chloride)										9,15E-04	1,04E-05	2,62E-04	0,0012
Chloroform										1,49E-04	1,69E-06	4,26E-05	0,0002
Dichloromethane (Methylene Chloride)										1,71E-02	1,95E-04	4,90E-03	0,0222
Ethylbenzene										4,28E-02	7,30E-05	1,22E-02	0,0551
Hexane										1,19E-02	2,03E-05	3,40E-03	0,0153
Mercury (Total)*										1,24E-04	1,98E-06	9,95E-07	0,0001
Methyl Ethyl Ketone										4,52E-02	7,71E-05	1,29E-02	0,0582
Methyl Isobutyl Ketone										4,46E-03	7,61E-06	1,28E-03	0,0057
Perchloroethylene (Tetrachloroethylene)										1,17E-02	1,34E-04	3,36E-03	0,0152
Toluene									7,61E-04	1,39E-01	2,37E-04	3,97E-02	0,1796
Trichloroethylene (Trichloroethene)										5,31E-03	6,04E-05	1,52E-03	0,0069
Vinyl Chloride										3,99E-03	4,54E-05	1,14E-03	0,0052
Xylenes									5,30E-04	1,04E-01	1,78E-04	2,99E-02	0,1350
Diesel Exhaust PM	1,552E-02	6,621E-02	6,995E-01										0,7812
Hydrochloric Acid (HCl)**										5,717E+00	9,108E-02		5,8079
Total TAC	1,55E-02	6,62E-02	6,99E-01	0,00E+00	0,00E+00	-9,86E+01	0,00E+00	0,00E+00	7,13E-03	6,12E+00	9,22E-02	1,15E-01	-91,51

NET Daily Emissions for Operational Year 2050
Plan Concept 2: Pounds per Day (lb/day)

Operational Day 2050-Baseline	Onsite Roads	Offsite Roads	Offroad Equipment	MSW Spread/ Compact/ Exc/ Daily Cover	Wind Erosion	Composting Ops	MRF Ops	C&D Wood Chip / Grind / Crush	Gasoline Generators	LFGTE Engines	Flares	Landfill Gas Fugitive	Total (lb/day)
PM_{10}	253,2	5,4	0,7	28,7	1,7	10,6	13,1	20,3	0,1	0,0	4,6		338,5
$PM_{2.5}$	61,0	1,2	0,7	13,8	0,3	3,5	2,0	5,4	0,1	0,0	4,6		92,6
CO	2,0	9,5	193,3						0,3	303,7	27,2	1,5	537,6
NOx	3,8	25,5	32,1						0,5	72,9	8,2		143,0
SOx	0,0	0,1	0,4						0,1	0,2	9,1		9,9
VOC	0,1	0,6	5,3			-193,4			0,7	164,0	6,2	19,4	2,9
TACs													
Ammonia						1,58E+02							157,7233
Isopropyl Alcohol						-1,95E+02							-194,5823
Methanol						-5,88E+01							-58,8208
Naphthalene						-2,30E+00							-2,2995
Acetaldehyde						-6,44E-01			1,43E-03				-0,6424
Acrolein									1,72E-04				0,0002
Formaldehyde									2,19E-03				0,0022
PAH									3,12E-04				0,0003
1,1,1-Trichloroethane (methyl chloroform)										1,33E-03	1,34E-05	3,59E-04	0,0017
1,1,2,2-Tetrachloroethane										6,97E-04	7,03E-06	1,88E-04	0,0009
1,1-Dichloroethane										4,35E-03	4,39E-05	1,17E-03	0,0056
1,1-Dichloroethene										5,29E-04	5,33E-06	1,43E-04	0,0007
1,2-Dichloroethane (Ethylene Dichloride)										7,05E-04	7,10E-06	1,90E-04	0,0009
1,2-Dichloropropane										1,54E-04	1,55E-06	4,16E-05	0,0002
Acrylonitrile										1,13E-04	1,71E-07	3,06E-05	0,0001
Benzene									1,74E-03	4,50E-03	6,81E-06	1,22E-03	0,0075
Carbon Disulfide										1,45E-03	2,19E-06	3,90E-04	0,0018
Carbon Tetrachloride										6,39E-05	6,44E-07	1,72E-05	0,0001
Carbonyl Sulfide										8,27E-04	1,25E-06	2,23E-04	0,0011
Chlorobenzene										1,52E-03	1,53E-05	4,09E-04	0,0019
Chloroethane (Ethyl Chloride)										9,15E-04	9,22E-06	2,47E-04	0,0012
Chloroform										1,49E-04	1,50E-06	4,02E-05	0,0002
Dichloromethane (Methylene Chloride)										1,71E-02	1,72E-04	4,62E-03	0,0219
Ethylbenzene										4,28E-02	6,47E-05	1,15E-02	0,0544
Hexane										1,19E-02	1,80E-05	3,21E-03	0,0151
Mercury (Total)*										1,24E-04	1,75E-06	9,38E-07	0,0001
Methyl Ethyl Ketone										4,52E-02	6,83E-05	1,22E-02	0,0574
Methyl Isobutyl Ketone										4,46E-03	6,74E-06	1,20E-03	0,0057
Perchloroethylene (Tetrachloroethylene)										1,17E-02	1,18E-04	3,17E-03	0,0150
Toluene									7,61E-04	1,39E-01	2,10E-04	3,75E-02	0,1773
Trichloroethylene (Trichloroethene)										5,31E-03	5,35E-05	1,43E-03	0,0068
Vinyl Chloride										3,99E-03	4,03E-05	1,08E-03	0,0051
Xylenes									5,30E-04	1,04E-01	1,58E-04	2,82E-02	0,1333
Diesel Exhaust PM	1,034E-02	6,621E-02	6,995E-01										0,7760
Hydrochloric Acid (HCl)**										5,717E+00	8,068E-02		5,7975
Total TAC	1,03E-02	6,62E-02	6,99E-01	0,00E+00	0,00E+00	-9,86E+01	0,00E+00	0,00E+00	7,13E-03	6,12E+00	8,17E-02	1,09E-01	

NET Hourly Emissions for Operational Year 2050
Plan Concept 1: Pounds per Day (lb/hr)

Operational Hour 2050-Baseline	Onsite Roads	Offsite Roads	Offroad Equipment	MSW Spread/ Compact/ Exc/ Daily Cover	Wind Erosion	Composting Ops	MRF Ops	C&D Wood Chip / Grind / Crush	Gasoline Generators	LFGTE Engines	Flares	Landfill Gas Fugitive	Total (lb/hr)
PM_{10}	28,00	0,39	0,09	2,05	0,07	0,65	0,94	18,01	0,10	0,00	0,22		50,53
$PM_{2.5}$	6,41	0,08	0,09	0,98	0,01	0,22	0,15	2,81	0,10	0,00	0,22		11,07
CO	0,20	0,68	25,03						0,31	12,65	1,28	0,07	40,22
NOx	0,57	1,82	5,05						0,50	3,04	0,38		11,36
SOx	0,00	0,01	0,06						0,09	0,01	0,43		0,59
VOC	0,01	0,04	0,68			-8,06			0,68	6,83	0,29	0,86	1,32
TACs													
Ammonia						6,57E+00							6,5718
Isopropyl Alcohol						-8,11E+00							-8,1076
Methanol						-9,33E+00							-9,3347
Naphthalene						-9,58E-02							-0,0958
Acetaldehyde						-2,68E-02			1,43E-03				-0,0254
Acrolein									1,72E-04				0,0002
Formaldehyde									2,19E-03				0,0022
PAH									3,12E-04				0,0003
1,1,1-Trichloroethane (methyl chloroform)										5,54E-05	1,51E-05	3,81E-04	0,0005
1,1,2,2-Tetrachloroethane										2,90E-05	7,93E-06	2,00E-04	0,0002
1,1-Dichloroethane										1,81E-04	4,95E-05	1,25E-03	0,0015
1,1-Dichloroethene										2,20E-05	6,02E-06	1,51E-04	0,0002
1,2-Dichloroethane (Ethylene Dichloride)										2,94E-05	8,02E-06	2,02E-04	0,0002
1,2-Dichloropropane										6,42E-06	1,75E-06	4,41E-05	0,0001
Acrylonitrile										4,72E-06	1,93E-07	3,24E-05	0,0000
Benzene									1,74E-03	1,88E-04	7,69E-06	1,29E-03	0,0032
Carbon Disulfide										6,02E-05	2,47E-06	4,14E-04	0,0005
Carbon Tetrachloride										2,66E-06	7,27E-07	1,83E-05	0,0000
Carbonyl Sulfide										3,44E-05	1,41E-06	2,37E-04	0,0003
Chlorobenzene										6,32E-05	1,73E-05	4,34E-04	0,0005
Chloroethane (Ethyl Chloride)										3,81E-05	1,04E-05	2,62E-04	0,0003
Chloroform										6,20E-06	1,69E-06	4,26E-05	0,0001
Dichloromethane (Methylene Chloride)										7,13E-04	1,95E-04	4,90E-03	0,0058
Ethylbenzene										1,78E-03	7,30E-05	1,22E-02	0,0141
Hexane										4,95E-04	2,03E-05	3,40E-03	0,0039
Mercury (Total)*										5,17E-06	1,98E-06	9,95E-07	0,0000
Methyl Ethyl Ketone										1,88E-03	7,71E-05	1,29E-02	0,0149
Methyl Isobutyl Ketone										1,86E-04	7,61E-06	1,28E-03	0,0015
Perchloroethylene (Tetrachloroethylene)										4,89E-04	1,34E-04	3,36E-03	0,0040
Toluene									7,61E-04	5,79E-03	2,37E-04	3,97E-02	0,0465
Trichloroethylene (Trichloroethene)										2,21E-04	6,04E-05	1,52E-03	0,0018
Vinyl Chloride										1,66E-04	4,54E-05	1,14E-03	0,0014
Xylenes									5,30E-04	4,35E-03	1,78E-04	2,99E-02	0,0350
Diesel Exhaust PM	1,109E-03	4,729E-03	9,441E-02										0,1002
Hydrochloric Acid (HCl)**										2,382E-01	9,108E-02		0,3293
Total TAC	1,11E-03	4,73E-03	9,44E-02	0,00E+00	0,00E+00	-1,10E+01	0,00E+00	0,00E+00	7,13E-03	2,55E-01	9,22E-02	1,15E-01	

NET Hourly Emissions for Operational Year 2050
Plan Concept 2: Pounds per Day (lb/hr)

Operational Hour 2050-Baseline	Onsite Roads	Offsite Roads	Offroad Equipment	MSW Spread/ Compact/ Exc/ Daily Cover	Wind Erosion	Composting Ops	MRF Ops	C&D Wood Chip / Grind / Crush	Gasoline Generators	LFGTE Engines	Flares	Landfill Gas Fugitive	Total (lb/hr)
PM_{10}	18,08	0,39	0,09	2,05	0,07	0,65	0,94	18,01	0,10	0,00	0,19		40,58
$PM_{2.5}$	4,36	0,08	0,09	0,98	0,01	0,22	0,15	2,81	0,10	0,00	0,19		9,00
CO	0,14	0,68	25,03						0,31	12,65	1,13	0,06	40,02
NOx	0,27	1,82	5,05						0,50	3,04	0,34		11,02
SOx	0,00	0,01	0,06						0,09	0,01	0,38		0,55
VOC	0,01	0,04	0,68			-8,06			0,68	6,83	0,26	0,81	1,24
TACs													
Ammonia						6,57E+00							6,5718
Isopropyl Alcohol						-8,11E+00							-8,1076
Methanol						-9,33E+00							-9,3347
Naphthalene						-9,58E-02							-0,0958
Acetaldehyde						-2,68E-02			1,43E-03				-0,0254
Acrolein									1,72E-04				0,0002
Formaldehyde									2,19E-03				0,0022
PAH									3,12E-04				0,0003
1,1,1-Trichloroethane (methyl chloroform)										5,54E-05	1,34E-05	3,59E-04	0,0004
1,1,2,2-Tetrachloroethane										2,90E-05	7,03E-06	1,88E-04	0,0002
1,1-Dichloroethane										1,81E-04	4,39E-05	1,17E-03	0,0014
1,1-Dichloroethene										2,20E-05	5,33E-06	1,43E-04	0,0002
1,2-Dichloroethane (Ethylene Dichloride)										2,94E-05	7,10E-06	1,90E-04	0,0002
1,2-Dichloropropane										6,42E-06	1,55E-06	4,16E-05	0,0000
Acrylonitrile										4,72E-06	1,71E-07	3,06E-05	0,0000
Benzene									1,74E-03	1,88E-04	6,81E-06	1,22E-03	0,0031
Carbon Disulfide										6,02E-05	2,19E-06	3,90E-04	0,0005
Carbon Tetrachloride										2,66E-06	6,44E-07	1,72E-05	0,0000
Carbonyl Sulfide										3,44E-05	1,25E-06	2,23E-04	0,0003
Chlorobenzene										6,32E-05	1,53E-05	4,09E-04	0,0005
Chloroethane (Ethyl Chloride)										3,81E-05	9,22E-06	2,47E-04	0,0003
Chloroform										6,20E-06	1,50E-06	4,02E-05	0,0000
Dichloromethane (Methylene Chloride)										7,13E-04	1,72E-04	4,62E-03	0,0055
Ethylbenzene										1,78E-03	6,47E-05	1,15E-02	0,0134
Hexane										4,95E-04	1,80E-05	3,21E-03	0,0037
Mercury (Total)*										5,17E-06	1,75E-06	9,38E-07	0,0000
Methyl Ethyl Ketone										1,88E-03	6,83E-05	1,22E-02	0,0141
Methyl Isobutyl Ketone										1,86E-04	6,74E-06	1,20E-03	0,0014
Perchloroethylene (Tetrachloroethylene)										4,89E-04	1,18E-04	3,17E-03	0,0038
Toluene									7,61E-04	5,79E-03	2,10E-04	3,75E-02	0,0442
Trichloroethylene (Trichloroethene)										2,21E-04	5,35E-05	1,43E-03	0,0017
Vinyl Chloride										1,66E-04	4,03E-05	1,08E-03	0,0013
Xylenes									5,30E-04	4,35E-03	1,58E-04	2,82E-02	0,0332
Diesel Exhaust PM	7,385E-04	4,729E-03	9,441E-02										0,0999
Hydrochloric Acid (HCl)**										2,382E-01	8,068E-02		0,3189
Total TAC	7,39E-04	4,73E-03	9,44E-02	0,00E+00	0,00E+00	-1,10E+01	0,00E+00	0,00E+00	7,13E-03	2,55E-01	8,17E-02	1,09E-01	

WPWMA Composting Facility Operations
Composting Emissions Net Increase in 2050 from 2018 Baseline

Operating Parameters

Parameter	Units	Operation	Notes
Operational Parameter			
Hours of Operation - Composting Ops (screen, load, unload)	hours/day	10	Data Request Info
Hours of Operation for Stockpiles and Compost Piles	hours/day	24	
Operational Days per Year	days/year	261	Data Request Info
Greenwaste/Food Waste/Wood Waste Throughput per hour (2018)	(2018) wet tons/hr	12,4	WAP Flow Chart (2018)
Greenwaste/Food Waste/Wood Waste Throughput per hour (2050)	(2050) wet tons/hr	32,3	WAP Flow Chart (2050, inc div)
Greenwaste/Food Waste/Wood Waste Throughput per Day (2018)	(2018) wet tons/day	298	WAP Flow Chart (2018)
Greenwaste/Food Waste/Wood Waste Throughput per Day (2050)	(2050) wet tons/day	776	WAP Flow Chart (2050, inc div)
Daily Site-Wide Peaking Factor	Peak tpd/Avg tpd	1,28265	WAP Flow Chart
Greenwaste/Food Waste/Wood Waste Throughput per Year (TP) (2018)	(2018) wet tons/yr	60 606	WAP Flow Chart (2018)
Greenwaste/Food Waste/Wood Waste Throughput per Year (TP) (2050)	2050 wet tons/yr	157 806	WAP Flow Chart (2050, inc div)
Stockpile Hold Time (SD)	days	7	Note 11 Data Request Info
No. of Load/Unload Operations per Batch - pre-compost	operations/batch	3	12
No. of Load/Unload Operations per Batch - during/after compost	operations/batch	3	13
Weight of greenwaste per batch	lbs/batch		7
Number of batches per ton greenwaste processed	tons/batch		
Compost Process Rate	batches/day		
Compost Process Rate	batches/year		

SOURCE DESCRIPTION	EMISSION CONTROL TYPE	CONTROL EFFICIENCY						
		VOC	NH_3	PM_{10}	$PM_{2.5}$	CO_2	CH_4	N_2O
		CONTROL EFFICIENCY	CONTROL EFFICIENCY	CONTROL EFFICIENCY	CONTROL EFFICIENCY	CONTROL EFFICIENCY	CONTROL EFFICIENCY	CONTROL EFFICIENCY
		%	%	%	%	%	%	%
Stockpiles (Uncontrolled)	Uncontrolled stockpiling	0%	0%					
Composting - Active (Future 2050) (Aerated Static Pile & 12" Biofilter Compost Cap)	ASP/Biofilter [8,19]	80%	53%			70%	70%	70%
Composting - Curing	Uncontrolled curing	0%	0%			0%	0%	0%
Compost Screening Operations	Controlled screening			50%	50%			
Greenwaste Grinder Operations	Controlled grinder			50%	50%			
Load/Unload Operations - pre-compost[9]	Uncontrolled loading/unloading			0%	0%			
Load/Unload Operations - during/after compost[10]	Wet Suppression loading/unloading			50%	50%			

Emission Factors	Units	Notes	Emission Factor Parameters						
			VOC	NH_3	PM_{10}	$PM_{2.5}$	CO_2	CH_4	N_2O
Uncontrolled Stockpile Emission Factor (SEF)	lbs/wet-ton-day	1,14	0,2	0,02					
Compost Processing Emission Factor (CPEF)	lbs/wet-ton	1	3,58	0,78					
CO_2 Emissions fom Composting	lb CO_2/lb dry solids	4					0,44		
CH_4 and N_2O Emissions fom Composting	lb CH_4 or N_2O/ wet lb waste treated	4						0,004	0,0003
Emissions during active phase of composting	%	2,3,18	90%	70%			90%	90%	90%
Emissions during curing phase of composting	%	2,3,18	10%	30%			10%	10%	10%
Emissions during Compost Screening	lbs/ton	5			0,0144	0,0072			
Emissions during Grinder Screening	lbs/ton	5			0,0144	0,0072			
k = Particle Size Multiplier		6			0,35	0,053			
U = Mean Wind Speed, from Wind Erosion analysis	mph	6, 16			6,60	6,60			

WPWMA Composting Facility Operations
Composting Emissions Net Increase in 2050 from 2018 Baseline

SOURCE DESCRIPTION	PROCESS RATE (tons/hr)	Moisture Content %	EMISSION FACTORS							
			VOC EMISSION FACTOR (lbs/wet-ton)	NH_3 EMISSION FACTOR (lbs/wet-ton)	PM_{10} EMISSION FACTOR (lbs/ton)	$PM_{2.5}$ EMISSION FACTOR (lbs/ton)	CO_2 EMISSION FACTOR (lb/wet ton)	CH_4 EMISSION FACTOR (lb/wet ton)	N_2O EMISSION FACTOR (lb/wet ton)	EMISSION FACTOR TYPE
Stockpiles (Uncontrolled)	77,6	2								Uncontrolled stockpiling
Composting - Active with ASP (2050)	32,3	55	0,64	0,2566			107	2,16E+00	1,62E-01	ASP[8,19]
Composting - Active Windrows (2018)	12,4	55	3,22	0,546			356	7,20E+00	5,40E-01	Uncontrolled Windrows
Composting - Curing	19,9	55	0,358	0,234			39,6	8,00E-01	6,00E-02	Uncontrolled curing[19]
Compost Screening Operations	47,8	55			7,20E-03	3,60E-03				Controlled screening
Compost Grinder Operations	47,8	55			7,20E-03	3,60E-03				Controlled screening
Load/Unload Operations - pre-compost[9]	47,8	2			1,61E-03	2,43E-04				Uncontrolled loading/unloading
Load/Unload Operations - during/after compost[10]	47,8	55			1,55E-05	2,35E-06				Uncontrolled loading/unloading

SOURCE DESCRIPTION	PROCESS RATE (tons/hr)	Moisture Content %	TAC EMISSION FACTORS				
			Isopropyl Alcohol EMISSION FACTOR (lbs/wet-ton)	Methanol EMISSION FACTOR (lbs/wet-ton)	Naphthalene EMISSION FACTOR (lbs/ton)	Acetaldehyde EMISSION FACTOR (lbs/ton)	EMISSION FACTOR NOTE
Composting - Active with ASP (2050)	32,3	55	0,27	0,082	0,003	0,0009	20
Composting - Active Windrows (2018)	12,4	55	1,36	0,412	0,016	0,005	20

SOURCE DESCRIPTION	COMPOSTING EMISSIONS CALCULATIONS (HOURLY) Net difference from 2018 to 2050										
	VOC EMISSIONS (lbs/hr)	NH_3 EMISSIONS (lbs/hr)	PM_{10} EMISSIONS (lbs/hr)	$PM_{2.5}$ EMISSIONS (lbs/hr)	CO_2 EMISSIONS (lbs/hr)	CH_4 EMISSIONS (lbs/hr)	N_2O EMISSIONS (lbs/hr)	Isopropyl Alcohol EMISSIONS (lbs/hr)	Methanol EMISSIONS (lbs/hr)	Naphthalene EMISSIONS (lbs/hr)	Acetaldehyde EMISSIONS (lbs/hr)
Stockpiles (Uncontrolled)	3,98	0,398									
Composting - Active with ASP (100%) Net difference from 2018 to 2050	-19,16	1,52			-968	-20	-1	-8	-9,33	-0,10	-0,03
Composting - Curing	7,13	4,66			788,17	15,92	1,19				
Compost Screening Operations			1,72E-01	8,60E-02							
Compost Grinder Operations			1,72E-01	8,60E-02							
Truck Unload to Stockpile - pre-compost[9]			7,68E-02	1,16E-02							
Unload Greenwaste to Grinder - pre-compost[9]			7,68E-02	1,16E-02							
Unload Greenwaste to Screener - pre-compost[9]			7,68E-02	1,16E-02							
Unload Greenwaste to Active w ASP - pre-compost[9]			7,68E-02	1,16E-02							
Unload Compost to Curing - during-compost[10]			3,71E-04	5,61E-05							
Unload Cured Compost to Screen - post-compost[10]			3,71E-04	5,61E-05							
Load Final Compost to Truck - post-compost[10]			3,71E-04	5,61E-05							

SOURCE DESCRIPTION	COMPOSTING EMISSIONS CALCULATIONS (DAILY) Net difference from 2018 to 2050										
	VOC EMISSIONS (lbs/day)	NH_3 EMISSIONS (lbs/day)	PM_{10} EMISSIONS (lbs/day)	$PM_{2.5}$ EMISSIONS (lbs/day)	CO_2 EMISSIONS (lbs/day)	CH_4 EMISSIONS (lbs/day)	N_2O EMISSIONS (lbs/day)	Isopropyl Alcohol EMISSIONS (lbs/day)	Methanol EMISSIONS (lbs/day)	Naphthalene EMISSIONS (lbs/day)	Acetaldehyde EMISSIONS (lbs/day)
Stockpiles (Uncontrolled)	95,5	9,55									
Composting - Active with ASP (100%) Net difference from 2018 to 2050	-459,9	36,4			-23 232	-469	-35,20	-195	-59	-2,3	-0,6
Composting - Curing	171,0	111,8			18 916	382,1	28,66				
Compost Screening Operations			2,79	1,40							
Compost Grinder Operations			2,79	1,40							
Truck Unload to Stockpile - pre-compost[9]			1,25	0,189							
Unload Greenwaste to Grinder - pre-compost[9]			1,25	0,189							
Unload Greenwaste to Screener - pre-compost[9]			1,25	0,189							
Unload Greenwaste to Active w ASP - pre-compost[9]			1,25	0,189							
Unload Compost to Curing - during-compost[10]			0,01	0,001							
Unload Cured Compost to Screen - post-compost[10]			0,01	0,001							
Load Final Compost to Truck - post-compost[10]			0,01	0,001							

WPWMA Composting Facility Operations
Composting Emissions Net Increase in 2050 from 2018 Baseline

SOURCE DESCRIPTION	COMPOSTING EMISSIONS CALCULATIONS (ANNUAL) Net difference from 2018 to 2050										
	VOC EMISSIONS (lbs/yr)	NH_3 EMISSIONS (lbs/yr)	PM_{10} EMISSIONS (lbs/yr)	$PM_{2.5}$ EMISSIONS (lbs/yr)	CO_2 EMISSIONS (lbs/yr)	CH_4 EMISSIONS (lbs/yr)	N_2O EMISSIONS (lbs/yr)	Isopropyl Alcohol EMISSIONS (lbs/yr)	Methanol EMISSIONS (lbs/yr)	Naphthalene EMISSIONS (lbs/yr)	Acetaldehyde EMISSIONS (lbs/yr)
Stockpiles (Uncontrolled)	19 440	1 944									
Composting - Active with ASP (100%) Net difference from 2018 to 2050	-93 582	7 405			-4 727 313	-95 501	-7 163	-39 595	-11 969	-468	-131
Composting - Curing	34 798	22 745			3 849 138	77 760	5 832				
Compost Screening Operations			568	284							
Compost Grinder Operations			568	284							
Truck Unload to Stockpile - pre-compost[9]			254	38,4							
Unload Greenwaste to Grinder - pre-compost[9]			254	38,4							
Unload Greenwaste to Screener - pre-compost[9]			254	38,4							
Unload Greenwaste to Active w ASP - pre-compost[9]			254	38,4							
Unload Compost to Curing - during-compost[10]			1,22	0,19							
Unload Cured Compost to Screen - post-compost[10]			1,22	0,19							
Load Final Compost to Truck - post-compost[10]			1,22	0,19							

SOURCE DESCRIPTION	COMPOSTING EMISSIONS CALCULATIONS (ANNUAL) tpy									
					CO_2		CH_4		N_2O	
	VOC EMISSIONS (tpy)	NH_3 EMISSIONS (tpy)	PM_{10} EMISSIONS (tpy)	$PM_{2.5}$ EMISSIONS (tpy)	BIOGENIC EMISSIONS (tpy)	BIOGENIC EMISSIONS (MT/yr)	NON-BIOGENIC EMISSIONS (tpy)	NON-BIOGENIC EMISSIONS (MT/yr)	NON-BIOGENIC EMISSIONS (tpy)	NON-BIOGENIC EMISSIONS (MT/yr)
Stockpiles (Uncontrolled)	9,72	0,972								
Composting - Active with ASP (100%) Net difference from 2018 to 2050	-46,79	3,70			-2 364	-2 144	-48	-43	-3,58	-3,25
Composting - Curing	17,40	11,37			1925	1746	38,9	35,3	2,916	2,645
Compost Screening Operations			0,284	0,142						
Compost Grinder Operations			0,284	0,142						
Truck Unload to Stockpile - pre-compost[9]			0,127	0,0192						
Unload Greenwaste to Grinder - pre-compost[9]			0,127	0,0192						
Unload Greenwaste to Screener - pre-compost[9]			0,127	0,0192						
Unload Greenwaste to Active w ASP - pre-compost[9]			0,127	0,0192						
Unload Compost to Curing - during-compost[10]			0,001	0,0001						
Unload Cured Compost to Screen - post-compost[10]			0,001	0,0001						
Load Final Compost to Truck - post-compost[10]			0,001	0,0001						

Calculated Emissions Net difference from 2018 to 2050	Units	VOC	NH_3	PM_{10}	$PM_{2.5}$	CO_2	CH_4	N_2O	Isopropyl Alcohol	Methanol	Naphthalene	Acetaldehyde
Hourly Emissions	lb/hour	-8,1	6,57	0,652	0,219	-180	-4	-0,27	-8,11	-9,33	-0,096	-0,027
Daily Emissions	lb/day	-193	157,7	10,59	3,55	-4 316	-87	-6,5	-194,58	-58,82	-2,30	-0,64
Annual Emissions	lb/year	-39 344	32 094	2 154	722	-878 176	-17 741	-1 331	-39 595	-11 969	-468	-131
	tpy	-19,7	16,0	1,077	0,361	-439	-9	-0,67	-19,80	-5,98	-0,23	-0,07

NOTES:
1) Emission Factors for VOC and NH_3 are from California ARB Emissions Inventory Methodology for Composting Facilities, Dated 3/2/15, Tables III-1 and III-2. 80% control factor assumed.
2) 90% of VOC Emissions assumed to occur during active phase, 10% during curing https://www.arb.ca.gov/ei/areasrc/Composting_Emissions_Inventory_Methodology_Final_Combined.pdf
3) Assume 70% of the NH_3 emissions happen in the active phase of composting and 30% of the NH_3 emissions happen in the curing phase (BAAQMD Draft Engineering Report for Waste Management of Alameda County, App. #26437). https://www.baaqmd.gov/~/media/files/engineering/public-notices/2017/26437/26437_a2066_04262017_proposed_major_modify_eval-pdf.pdf?la=fil-ph
4) Table 2-4. Default Emission Factors for Composting Greenhouse Gas Emissions Estimation Methodologies for Biogenic Emissions from Selected Source Categories: Solid Waste Disposal Wastewater Treatment Ethanol Fermentation - RTI, International, Draft Dec 2010 (https://www3.epa.gov/ttnchie1/efpac/ghg/GHG_Biogenic_Report_draft_Dec1410.pdf)
5) Compost screening and grinder operations emission factors for PM_{10} and $PM_{2.5}$ are from EPA-454/R-95-012, August 1995, 3-07-008-01 Log Debarking Operations. Assume $PM_{2.5}$ = 50% of PM_{10}. These are the values used in the BAAQMD Eng. Eval. for Altamont. Water suppression controls = 50% control.
6) Load/Unload Emission Factors for PM_{10} and $PM_{2.5}$ are calculated using methodology in EPA AP-42 Section 13.2.4 Aggregate Handling and Storage Piles.
7) CalRecycle estimates that loose yard waste weighs 600 lbs/yd^3. (https://www.calrecycle.ca.gov/swfacilities/cdi/tools/calculations). Batch size is based on CAT 950H loader specs (bucket capacity = 4 yd^3).
8) Control efficiency from https://www.arb.ca.gov/ei/areasrc/Composting%20Emissions%20Inventory%20Methodology%20Final%20Combined.pdf, Table III-3 also control efficiency from SCAQMD Board Meeting, PAR 1133.1 and PR 1133.3 Final Staff Report, p. III-4 (SCAQMD, 7/8/11). http://www.aqmd.gov/docs/default-source/Agendas/Governing-Board/2011/2011-jul8-037.pdf
9) 2% minimum moisture content expected throughout pre-composting steps - this number taken from Altamont Composting Permitting Eng. Eval. (BAAQMD), assume 0% control.
10) For moisture content during and after compost, used conservative optimal moisture from data request shows 50-55% moisture content, assume 50% emission control.
11) Stockpiling duration of 7 days, per data request provided by WPWMA.
12) Number of Load/Unload Operations pre-compost consists of: 1) Truck unloading food waste to stockpile, 2) Food waste to Grinder Transfer, 3) Food waste to compost pile.
13) Number of Load/Unload Operations during and after compost consists of: 1) Compost pile to curing pile, 2) Cured compost to screener, and 3) Screened compost to truck transfer.
14) Assume Ammonia EF value is 0.02 lbs/wet-ton-day per BAAQMD Draft Eng. Eval. for Altamont, App. #26437.
15) The compost cycle consists of 56-84 days during the active phase and 56 days during the curing phase.
16) Mean Wind Speed for Sacramento Executive Airport, 1996-2006, https://wrcc.dri.edu/Climate/comp_table_show.php?stype=wind_speed_avg.
17) CalRecycle and SJVAPCD: http://www.valleyair.org/grant_programs/TAP/documents/C-15636-ACP/C-15636_ACP_FinalReport.pdf
18) It is assumed that CO_2, CH_4, and N_2O emissions during the active and curing stages are identical to VOC distribution: 90% during active phase and 10% during curing phase.
19) Technology controls show a range between 53% and 99%+ using GAC or biofilter technology See http://www.valleyair.org/grant_programs/TAP/documents/C-15636-ACP/C-15636_ACP_FinalReport.pdf and https://ww3.arb.ca.gov/ei/areasrc/composting_emissions_inventory_methodology_final_combined.pdf.
20) From the Atmospheric Environment Journal study done by UC Davis and CalRecycle: Volatile Organic Compound Emissions from Green Waste Composting: Characterization and Ozone Formation, dated Jan 7, 2011.

VOC and NH_3 Emissions are calculated as follows:

Total Annual Emissions (lbs/yr) = (CPEF x (1-CE) x TP) + (SEF x SD x TP)
Where:
- CPEF = Composting Process Emission Factor (lbs/wet-ton)
- SEF = Stockpile Emission Factor (lbs/wet ton-day)
- SD = Average number of days material is stockpiled (days)
- CE = Control Efficiency (%)
- TP = Total annual facility throughput (wet-tons)

PM_{10} and $PM_{2.5}$ from Load/Unload Operations are calculated as follows:

$E = k \times (0.0032) \times [(U/5)^{1.3}]/[(M/2)^{1.4}]$
Where:
- E = Emission Factor (lb/ton)
- U = Mean Wind Speed, mph
- M = Moisture Content, %

WPWMA Material Recovery Facility (MRF) Operations
MRF Sorting Emissions (Net Increase 2018 to 2050)

Operating Parameters

Parameter	Units	Operation	Notes
Operational Parameter			
Hours of Operation - Recycling Operations	hours/day	14	
Operational Days per Year	days/year	365	
Recycling Materials Throughput per Day	tons/day	621	
Daily Site-Wide Peaking Factor	Peak tpd/Avg tpd	1,28	WAP Flow Chart
Recycling Materials Throughput per Year	2018 tons/year	240 067	WAP Flow Chart Net (2018)
Recycling Materials Throughput per Year	2050 tons/year	416 709	WAP Flow Chart Net (2050, inc div)
Recycling Materials Throughput per Year	NET tons/year	176 642	WAP Flow Chart Net (2050-2018)
No. of Transfer Operations per Batch	operations/batch	3	1
Weight of Recycling Materials per Batch	lbs/batch	444	2
Weight of Recycling Materials per Batch	tons/batch	0,222	
Recycling Throughput Rate	batches/day	2 796	
Recycling Throughput Rate	batches/year	795 683	

MRF EMISSION FACTORS

SOURCE DESCRIPTION	Quantity	SOURCE TYPE	Activity Code	PROCESS RATE[1] (tons/hr)	PROCESS RATE (hrs/day)	PROCESS RATE (days/yr)	PM_{10} EMISSION FACTOR[2] (lbs/ton)	$PM_{2.5}$ EMISSION FACTOR[2] (lbs/ton)	Control Type
MRF Operation									
Conveyor System / Loading / Unloading	187	Transfer point	MRF	44,34	14	365	4,60E-05	1,30E-05	Maintain moisture
Screens	17	Process screen	MRF	44,34	14	365	7,40E-04	5,00E-05	dry process screen with insertable filter

MRF EMISSIONS

SOURCE DESCRIPTION	PM_{10} EMISSIONS (lbs/hr)	$PM_{2.5}$ EMISSIONS (lbs/hr)	PM_{10} EMISSIONS (lb/day)	$PM_{2.5}$ EMISSIONS (lb/day)	PM_{10} EMISSIONS (lbs/yr)	$PM_{2.5}$ EMISSIONS (lbs/yr)
MRF Operation						
Conveyor System	0,38	0,11	5,34	1,51	429	551
Screens	0,56	0,04	7,81	0,53	2 222	193
Totals:	**0,94**	**0,145**	**13,15**	**2,04**	**2 652**	**743**

NOTES:
1) Hourly process rates are based on MRF operations.
2) AP-42 Section 11.19.2 will be used for $PM_{2.5}$ emission factors, dated Aug 2004.

WPWMA Construction and Demolition (C&D) Waste Operations
C&D Facility - Wood Chipping & Grinding Emissions (Net Increase 2018 to 2050)

Operating Parameters

Parameter	Units	Operation	Notes
Operational Parameter			
Hours of Operation - GWF Operations	hours/day	12	
Operational Days per Year	days/year	365	
Daily Site-Wide Peaking Factor	Peak tpd/Avg tpd	1,28265	WAP Flow Chart
Greenwaste/Wood Waste Throughput per Day (Net Increase)	wet tons/day	266	
Annual Greenwaste/Wood Waste Throughput (2018)	wet tons/year	19 994	2018
Annual Greenwaste/Wood Waste Throughput (2050)	wet tons/year	95 793	2050, inc div
Annual Greenwaste/Wood Waste Throughput Net Increase	wet tons/year	75 799	WAP Flow Chart Net (2050-2018)
No. of Drop/Transfer Operations per Batch	operations/batch	5	5
Weight of greenwaste per batch	lbs/batch	2 400	2
Number of tons per batch greenwaste processed	tons/batch	1,20	
Green/Wood Waste Process Rate	batches/day	222	
Green/Wood Waste Process Rate	batches/year	63 166	

GREEN/WOOD WASTE CHIPPING & GRINDING EMISSION FACTORS

SOURCE DESCRIPTION	SOURCE TYPE	PROCESS RATE	PROCESS RATE UNITS	PM_{10} Uncontrolled EF	$PM_{2.5}$ Uncontrolled EF	EMISSION FACTOR UNITS	EMISSION FACTOR TYPE	CONTROL EFFICIENCY
Conveyor / Process Line[1,2]	transfer point	18,5	batches/hr	2,31E-03	3,50E-04	lbs/batch	uncontrolled transfer	0%
Grinding & chipping / Wood Mauler[3]	processing	22,2	tons/hr	1,44E-02	7,20E-03	lbs/ton	controlled processing	50%
Stacker Conveyor[1,2]	transfer point	18,5	batches/hr	2,31E-03	3,50E-04	lbs/batch	controlled processing	0%

GREEN/WOOD WASTE CHIPPING & GRINDING PM EMISSIONS

SOURCE DESCRIPTION	PM10 EMISSIONS (lbs/hr)	PM2.5 EMISSIONS (lbs/hr)	PM10 EMISSIONS (lbs/day)	PM2.5 EMISSIONS (lbs/day)	PM10 EMISSIONS (lbs/yr)	PM2.5 EMISSIONS (lbs/yr)
Conveyor / Process Line	0,214	0,0324	2,57	0,388	730	111
Grinding & chipping / Wood Mauler	0,160	0,080	3,84	1,92	1 091	546
Stacking Conveyor	0,043	0,032	2,57	0,39	730	111
Total:	**0,416**	**0,145**	**9,0**	**2,69**	**2 551**	**767**

Grinding/Chipping Emissions

Calculated Emissions	Units	PM_{10} Value	$PM_{2.5}$ Value
Max. Hourly Emissions	lb/hour	0,203	0,112
Max. Daily Emissions	lb/day	6,40	2,31
Annual Emissions	lb/year	1 821	656
	tpy	0,91	0,33

Conveyor/Process Line Emissions

Calculated Emissions	Units	PM_{10} Value	$PM_{2.5}$ Value
Max. Hourly Emissions	lb/hour	0,214	0,0324
Max. Daily Emissions	lb/day	2,57	0,388
Annual Emissions	lb/year	730	111
	tpy	0,365	0,0553

NOTES:

1) Unload/transfer Emission Factors for PM_{10} and $PM_{2.5}$ are calculated using methodology in EPA AP-42 Section 13.2.4 Aggregate Handling and Storage Piles.

2) CalRecycle estimates that loose yard waste weighs 600 lbs/yd^3. (https://www.calrecycle.ca.gov/swfacilities/cdi/tools/calculations). Batch size is based on CAT 950H loader specs (bucket capacity = 4 yd^3).

3) Chipping/grinding emission Factors for PM_{10} are from EPA-454/R-95-012, August 1995, 3-07-008-02 Log Debarking Operations. Altamont Eng. Eval. (BAAQMD Application # 26437, Plant No. 2066) uses these emission factors - Although they were revoked by EPA in 2002, they are the most representative of greenwaste chipping and grinding operations at this landfill. Emission Factors for $PM_{2.5}$ are not provided in the EPA-454/R-95-012. Assume $PM_{2.5}$ = 50% of PM_{10} (same assumption was made for Altamont).

4)Grinding & chipping emission factors for PM_{10} and $PM_{2.5}$ are from EPA-454/R-95-012, August 1995, 3-07-008-01 Log Debarking Operations. Assume $PM_{2.5}$ = PM_{10}. These are the values used in the BAAQMD Eng. Eval. for Altamont. Water suppression controls = 50% control.

5) Number of Loading/Unloading Operations consists of: 1) Truck unloading to stockpile, 2) Greenwaste to Grinder Transfer, 3) Greenwaste to Screener Transfer, 4) Ground greenwaste to storage pile, 5) Screened greenwaste to truck and/or compost pile Transfer.

PM_{10} and $PM_{2.5}$ from Drop/Transfer Operations are calculated as follows:

$E = k \times (0.0032) \times [(U/5)^{1.3}]/[(M/2)^{1.4}]$

Where:	PM_{10} Value	$PM_{2.5}$ Value
E = Emission Factor (lb/ton)	--	--
k = Particle Size Multiplier	0,35	0,053
U - Mean Wind Speed (mph)	2,20	2,20
M = Material Moisture Content (%)	2	2

U = Mean Wind Speed for Placer County APCD in CalEEMod.

M = 2% minimum expected throughout all processing steps - this number taken from Altamont Composting Permitting Eng. Eval. (BAAQMD)

WPWMA Construction and Demolition (C&D) Waste Operations
C&D Facility - Asphalt and Concrete Crushing/Screening (Net Increase 2018 to 2050)

C&D WASTE CRUSHING PLANT EMISSION FACTORS

SOURCE DESCRIPTION	SOURCE TYPE	Activity Code	PROCESS RATE[1] (tons/hr)	PROCESS RATE (tons/day)	Peaking Factor 1,28265	PROCESS RATE (tons/yr)	PROCESS RATE (hrs/day)	PROCESS RATE (days/yr)	PM_{10} EMISSION FACTOR[2] (lbs/ton)	$PM_{2.5}$ EMISSION FACTOR[3] (lbs/ton)	EMISSION FACTOR TYPE	CONTROL EFFICIENCY
C&D Waste Crushing												
Front Loader to primary crusher	transfer point 1	CDICRUSH	1056,8	1056,8		75 799	1	92	1,10E-03	1,67E-04	water mist	50,0%
Primary crusher	process crushing	CDICRUSH	1056,8	1056,8		75 799	1	92	2,40E-03	3,63E-04	primary crushing with insertable filter	90,0%
Primary crusher to conveyor	transfer point 2	CDICRUSH	1056,8	1056,8		75 799	1	92	1,10E-03	1,67E-04	water mist	50,0%
Conveyor to secondary crusher	transfer point 3	CDICRUSH	1056,8	1056,8		75 799	1	92	1,10E-03	1,67E-04	water mist	50,0%
Secondary crusher	process crushing	CDICRUSH	1056,8	1056,8		75 799	1	92	2,40E-03	3,63E-04	Secondary crushing with insertable filter	90,0%
Secondary crusher to conveyor	transfer point 4	CDICRUSH	1056,8	1056,8		75 799	1	92	1,10E-03	1,67E-04	water mist	50,0%
Conveyor to triple deck screen	transfer point 5	CDICRUSH	1056,8	1056,8		75 799	1	92	1,10E-03	1,67E-04	water mist	50,0%
Triple deck screen	process screen	CDICRUSH	1056,8	1056,8		75 799	1	92	8,70E-03	1,32E-03	dry process screen with insertable filter	90,0%
Triple deck screen to conveyors 1 and	transfer point 6	CDICRUSH	1056,8	1056,8		75 799	1	92	1,10E-03	1,67E-04	water mist	50,0%
Conveyor 1 to rock pile	transfer point 7	CDICRUSH	1056,8	1056,8		75 799	1	92	1,10E-03	1,67E-04	water mist	50,0%
Conveyor 2 to secondary crusher	transfer point 8	CDICRUSH	1056,8	1056,8		75 799	1	92	1,10E-03	1,67E-04	water mist	50,0%
Secondary crusher	fine crushing	CDICRUSH	1056,8	1056,8		75 799	1	92	1,50E-02	2,27E-03	dry fine crushing with insertable filter	90,0%
Secondary crusher to conveyor	transfer point 9	CDICRUSH	1056,8	1056,8		75 799	1	92	1,10E-03	1,67E-04	water mist	50,0%
Conveyor to triple deck screen	transfer point 10	CDICRUSH	1056,8	1056,8		75 799	1	92	1,10E-03	1,67E-04	water mist	50,0%
Triple deck screen	fine screen	CDICRUSH	1056,8	1056,8		75 799	1	92	7,20E-02	1,09E-02	dry fine screen with insertable filter	90,0%
Triple deck screen to conveyor	transfer point 11	CDICRUSH	1056,8	1056,8		75 799	1	92	1,10E-03	1,67E-04	water mist	50,0%
Conveyor to rock pile	transfer point 12	CDICRUSH	1056,8	1056,8		75 799	1	92	1,10E-03	1,67E-04	water mist	50,0%

C&D WASTE CRUSHING PLANT EMISSIONS

SOURCE DESCRIPTION	PM_{10} EMISSIONS (lbs/hr)	$PM_{2.5}$ EMISSIONS (lbs/hr)	PM_{10} EMISSIONS (lb/day)	$PM_{2.5}$ EMISSIONS (lb/day)	PM_{10} EMISSIONS (lbs/yr)	$PM_{2.5}$ EMISSIONS (lbs/yr)
C&D Waste Crushing						
Front Loader to primary crusher	0,58	0,09	0,58	0,09	53,47	8,10
Primary crusher	0,25	0,04	0,25	0,04	23,33	3,53
Primary crusher to conveyor	0,58	0,09	0,58	0,09	53,47	8,10
Conveyor to secondary crusher	0,58	0,09	0,58	0,09	53,47	8,10
Secondary crusher	0,25	0,04	0,25	0,04	23,33	3,53
Secondary crusher to conveyor	0,58	0,09	0,58	0,09	53,47	8,10
Conveyor to triple deck screen	0,58	0,09	0,58	0,09	53,47	8,10
Triple deck screen	0,92	0,14	0,92	0,14	84,58	12,81
Triple deck screen to conveyors 1 and	0,58	0,09	0,58	0,09	53,47	8,10
Conveyor 1 to rock pile	0,58	0,09	0,58	0,09	53,47	8,10
Conveyor 2 to secondary crusher	0,58	0,09	0,58	0,09	53,47	8,10
Secondary crusher	1,59	0,24	1,59	0,24	145,84	22,08
Secondary crusher to conveyor	0,58	0,09	0,58	0,09	53,47	8,10
Conveyor to triple deck screen	0,58	0,09	0,58	0,09	53,47	8,10
Triple deck screen	7,61	1,15	7,61	1,15	700,01	106,00
Triple deck screen to conveyor	0,58	0,09	0,58	0,09	53,47	8,10
Conveyor to rock pile	0,58	0,09	0,58	0,09	53,47	8,10
Totals:	**17,60**	**2,66**	**17,60**	**2,66**	**1 619**	**245**

Emissions for Source: **CD_CRSH_1_2**

Calculated Emissions	Units	PM_{10} Value	$PM_{2.5}$ Value
Hourly Emissions	lb/hour	17,01	2,576
Daily Emissions	lb/day	17,01	2,576
Annual Emissions	lb/year	1 565	237,0

Emissions for Source: **CD_ROCKPILE**

Calculated Emissions	Units	PM_{10} Value	$PM_{2.5}$ Value
Hourly Emissions	lb/hour	0,581	0,0880
Daily Emissions	lb/day	0,581	0,0880
Annual Emissions	lb/year	53,5	8,10

NOTES:
1) Hourly process rates are based on similar landfill C&D waste crushing operations.
2) Emission Factors for PM_{10} are uncontrolled factors from AP-42, Section 11.19.2 for Crushed Stone, Table 11.19.2-2.
3) AP-42 Section 11.19.2 will be used for $PM_{2.5}$ emission factors, dated Aug 2004. $PM_{2.5}$ EF = PM_{10} EF x 0.053/0.35, where 0.053/0.35 is the ratio of particle size multipliers from Section 13.2.4 of AP-42.

	PM_{10}	$PM_{2.5}$
Particle Size Multiplier, k	0,35	0,053

Operations:
1) Primary/jaw rock crushing will take place on the landfill face and will crush excavated rock to a size suitable for further processing and screening. Equipment = Jaw crusher and conveyor.
2) Typically, these materials will be stored somewhere in the landfill where disposal operations will not occur within 180 days, and processed periodically for use as road base for internal roads.
3) This is for C&D concrete/asphalt recycling crushing for road base materials.

AERMOD Source	Pollutants	Operation Hours (hrs/day)	Operation Hours (days/yr)
CD_CRSH_1_2	PM_{10}, $PM_{2.5}$	1	92
CD_ROCKPILE	PM_{10}, $PM_{2.5}$	1	92

Jacobs

WPWMA Landfill Material Movement Operations
Fugitive Dust Emissions (Net Increase 2018 to 2050)

Cover Soil Dumping/Loading

Emission Factor calculated as follows, per *EFs for unloading based on Batch Drop (lb/ton) in AP-42 13.2.4* :

Emission Factor (lb/ton) = k x 0.0032 x $[U (mph) / 5]^{1.3}$ / $[M (\%) / 2]^{1.4}$

Pollutant	k (Particle Size Multiplier) [a]	U (Mean Wind Speed, mph) [a]	M (Material Moisture Content) [a]	Emission Factor (lb/ton)	Soil Density (ton/cy) [b]	Emission Factor (lb/cy)	Net Increase (2050-2018) Landfill Cover Soil Volume (cy) [c]	Peaking Factor	Daily Emissions (lbs/day) [d]	Total Emissions (tons/yr)
Cover Soil Dumping/Loading PM_{10}	0,35	4,92	12	8,93E-05	1,05	9,40E-05	73 076	1,28265	3,38E-02	3,43E-03
Cover Soil Dumping/Loading $PM_{2.5}$	0,053	4,92	12	1,35E-05	1,05	1,42E-05	73 076	1,28265	5,11E-03	5,20E-04

Notes:

[a] Particle Size Multiplier (k), and Material Moisture Content (M) taken from Section 4.3 of Appendix A of the *CalEEMod User's Guide and AP-42, Table 13.2.4-1* . Mean Wind Speed (U) taken as the CalEEMod default for Placer County APCD region. Value converted from units of m/s to mph.

[b] Soil density from CA Integrated Waste Management Board, from https://dpw.lacounty.gov/epd/CD/cd_attachments/Volume_to_Weight.pdf

[c] Clean soil used as landfill cover in 2018: 83,041. Increase in 2050 is 83,041 x 1.88. (Net value in 2050-2018).

[d] Active waste placement occurs 261 days per year.

Spreading Equipment Passes

Emission Factor calculated as follows, per AP-42 Table 11.9-1, for grading operations:

PM_{10} Emission Factor (lb/VMT) = 0.051 x $[S (mph)]^{2.0}$ x F_{PM10}

$PM_{2.5}$ Emission Factor (lb/VMT) = 0.04 x $[S (mph)]^{2.5}$ x $F_{PM2.5}$

Vehicle Miles Traveled (VMT) calculated as follows, per Section 4.3 of Appendix A of the *CalEEMod User's Guide* :

VMT (mile) = As (acre) / Wb (ft) x 43,560 (ft^2/acre) / 5,280 (ft/mile)

Pollutant	S (Mean Vehicle Speed, mph) [a]	F (Scaling Factor) [a]	Emission Factor (lb/VMT)	Working Face Area (acres/day) [b]	Wb (Blade Width of Grading Equipment, ft) [a]	Total Vehicle Miles Traveled (VMT)	Peaking Factor	Days per Year	Daily Emissions (lbs/day)	Total Emissions (tons/yr)
MSW Spreading PM_{10}	7,1	0,6	1,543	0,5	12	0,3	1,28	261	0,680	0,069
MSW Spreading $PM_{2.5}$	7,1	0,031	0,167	0,5	12	0,3	1,28	261	0,073	0,007

Notes:

[a] Mean Vehicle Speed (S), Scaling Factor (F), and Blade Width (Wb) taken from Section 4.3 of Appendix A of the *CalEEMod User's Guide* .

[b] Acreage of the Site (As) is the landfill exposed surface area (acres/day)

Bulldozing and Compactor Equipment Passes

Emission Factor calculated as follows, per AP-42 Section 11.9:

PM_{10} Emission Factor (lb/hr) = $\{[C \times s (\%)^{1.5}] / [M (\%)^{1.4}]\}$ x F_{PM10}

$PM_{2.5}$ Emission Factor (lb/hr) = $\{[C \times s (\%)^{1.2})] / [M (\%)^{1.3}]\}$ x $F_{PM2.5}$

Pollutant	C (AP-42 Coefficient) [a]	M (Material Moisture Content, %) [a]	s (Material Silt Content, %) [a]	F (Scaling Factor) [a]	Emission Factor (lb/hr)	Operation Per Day (hr/day)	Equipment Operating Daily	Peaking Factor	Days per Year	Daily Emissions (lbs/day)	Total Emissions (tons/yr)
Bulldozing PM_{10}	1,0	12,0	6,9	0,75	0,419	10	2	1,28	261	10,755	1,094
Bulldozing $PM_{2.5}$	5,7	12,0	6,9	0,105	0,240	10	2	1,28	261	6,164	0,627
Compacting PM_{10}	1,0	12,0	6,9	0,75	0,419	10	2	1,28	261	10,755	1,094
Compacting $PM_{2.5}$	5,7	12,0	6,9	0,105	0,240	10	2	1,28	261	6,164	0,627

Notes:

[a] Coefficient used by AP-42 (C), Material Moisture Content (M), Material Silt Content (s), and Scaling Factor (F) taken from AP-42 Section 11.9 and Section 13.2.4.

[b] MSW Compacting emissions are assumed to be similar to bulldozing.

Waste Placement Excavation

Source: SCAQMD CEQA Air Quality Handbook, November 1993. Table 9-9, assumed soil density of 1.8 ton/yd3.

PM_{10} Emission Factor lb/ft3/day) = 0.00042

$PM_{2.5}$ Emission Factor (lb/ft3/day) = 0.000087

Pollutant	Max Activity [a] (cu/day)	PM10 EF (lb/ft3/day)	PM2.5 EF [b] (lb/ft3/day)	Peaking Factor	Daily Emissions (lbs/day)	Total Emissions (tons/yr)
Excavation PM_{10}	12 000	0,00042		1,28265	6,465	0,658
Excavation $PM_{2.5}$	12 000	-	0,000087	1,28265	1,345	0,137

Notes:

[a] Max activity based on material excavation per day.

[b] Source: SCAQMD Particulate Matter (PM) 2.5 Significance Thresholds and Calculation Methodology, October 2006. For construction fugitive dust sources, it is assumed that 20.8% of the PM10 would be PM2.5.

WPWMA Wind Erosion of Exposed Surfaces for Operational (Net Increase 2018 to 2050)

Parameter	Units	PM_{10} Value	$PM_{2.5}$ Value	$PM_{2.5}/PM_{10}$ Ratio
Emission Factor, Exposed Areas	lb/acre	0,0316	0,0047	0,15
Hours of Operation	hours/day	24		
Operational Days per Year	days/year	365		
Silt Content of Soils (G)	%	7,5%	(AP-42, Table 13.2.4-1)	
Number of Days with at least 0.01 inches of precip. (H)	days	74	CalEEMod default for Placer Co	
Percentage of time wind speeds exceed 12 mph (I)	%	9	Roseville weather station (wunderground.com)	
Fraction of Total Suspended Particulates (J)	PM_{10}/TSP	0,5	SCAQMD Recommendation	
Disturbed Area - Working Face	acres/day	0,5		
Landfill Exposed Surface Area	acres/day	41	Defined in Data Request 2018 Operations Spreadsheet, Landfill Tab	
Disturbed Area - Clean Soil Stockpile	acres/day	0,1		
Exposed Surface Area - Clean Soil Stockpile	acres/day	13		

Calculated Emissions - Working Face	Units	PM_{10} Value	$PM_{2.5}$ Value
Hourly Emissions	lb/hour	0,001	0,0001
Daily Emissions	lb/day	0,016	0,002
Annual Emissions	lb/year	5,76	0,86

Calculated Emissions - Landfill Exposed SA	Units	PM_{10} Value	$PM_{2.5}$ Value
Hourly Emissions	lb/hour	0,05	0,01
Daily Emissions	lb/day	1,29	0,19
Annual Emissions	lb/year	472,54	70,88

Calculated Emissions - Clean Soil Pile Disturbed	Units	PM_{10} Value	$PM_{2.5}$ Value
Hourly Emissions	lb/hour	0,0001	0,00002
Daily Emissions	lb/day	0,003	0,0005
Annual Emissions	lb/year	1,15	0,17

Calculated Emissions - Clean Soil Pile Exposed	Units	PM_{10} Value	$PM_{2.5}$ Value
Hourly Emissions	lb/hour	0,02	0,003
Daily Emissions	lb/day	0,41	0,06
Annual Emissions	lb/year	149,83	22,47

Method: CEQA Air Quality Handbook, SCAQMD 1993

Equation: $E_5 = (1.7)(G/1.5)([365-H]/235)(I/15)(J)(SA)$ [lb/yr]

Variables:
G = silt content of soils
H = number of days with at least 0.01 inches of precipitation
I = percentage of time wind speeds exceed 12 mph
J = fraction of total suspended particulates
SA = exposed surface area (acres)

Values:

G =	7,5	(AP-42, Table 13.2.4-1)
H =	62	Roseville weather station (wunderground.com)
I =	9	Roseville weather station (wunderground.com)
J =	0,5	(SCAQMD recommendation)
SA =	*see above	Data Request from WPWMA

In "Background Document for Revisions to Fine Fraction Ratios Used for AP-42 Fugitive Dust Emission Factors" Nov 2006, Table 1 also states for open area wind erosion, a proposed PM2.5/PM10 ratio is 0.15

Jacobs

WPWMA Landfill Emergency Generators (Future Addition)

Engine Characteristics:

Equipment	Scalehouse E-Gen
Quantity	3
Fuel:	Gasoline
Fuel Heating Value (btu/gal):	124 000
Max Rated Horsepower (bhp):	15
Max Fuel Consumption @ 100% Load (gal/hr):	5,0
Heat Input (MMBtu/hr):	0,62
Annual Hours (hr/yr)	40,00
Control Device:	None

Criteria Pollutant and GHG Emission Factors:

Pollutant	Gasoline Emission Factor	Units
NO_x[a]	0,011	lb/hp-hr
CO[a]	0,007	lb/hp-hr
VOC[a]	0,015	lb/hp-hr
SO_2[a]	0,002	lb/hp-hr
PM_{10}[a]	0,002	lb/hp-hr
$PM_{2.5}$[a]	0,002	lb/hp-hr
CO_2[c]	154,809	lbs/MMBtu
CH_4[c]	6,60E-03	lbs/MMBtu
N_2O[c]	1,32E-03	lbs/MMBtu

Jacobs

WPWMA Landfill Emergency Generators (Future Addition)

Criteria and GHG Pollutant Emission Rates:

Pollutant	Each E-Gen Emissions		Total E-Gen	
	(lbs/hr)	(tons/yr)	(lbs/hr)	(tons/yr)
NO_x	0,17	0,00	0,50	0,01
CO	0,10	0,00	0,31	0,01
VOC	0,23	0,00	0,68	0,01
SO_2	0,03	0,00	0,09	0,00
PM_{10}	0,03	0,00	0,10	0,00
$PM_{2.5}$	0,03	0,00	0,10	0,00
CO_2	2322,13	46,44	287,94	5,76
CH_4	0,10	0,00	1,23E-02	0,00
N_2O	0,02	0,00	2,46E-03	0,00

Hazardous Air Pollutant (HAP) Potential Emissions:

Pollutant[b]	Emission Factor (lb/MMBtu)	Each E-Gen Emissions		Total E-Gen	
		(lbs/hr)	(tpy)	(lbs/hr)	(tons/yr)
Acetaldehyde	7,67E-04	4,76E-04	2,85E-05	1,43E-03	2,85E-05
Acrolein	9,25E-05	5,74E-05	3,44E-06	1,72E-04	3,44E-06
Benzene	9,33E-04	5,78E-04	3,47E-05	1,74E-03	3,47E-05
Formaldehyde	1,18E-03	7,32E-04	4,39E-05	2,19E-03	4,39E-05
Toluene	4,09E-04	2,54E-04	1,52E-05	7,61E-04	1,52E-05
Xylene	2,85E-04	1,77E-04	1,06E-05	5,30E-04	1,06E-05
PAH	1,68E-04	1,04E-04	6,25E-06	3,12E-04	6,25E-06
TOTAL HAPs		**2,38E-03**	**1,43E-04**	**7,13E-03**	**1,43E-04**

[a] Emission factors from AP-42 Section 3.3, "Gasoline and Diesel Industrial Engines", October 1996

[b] Emission factors from AP-42 Section 3.3, "Gasoline and Diesel Industrial Engines", October 1996

[c] Emission factors from Tables C-1 and C-2, 40 CFR Part 98, Subpart C.

WPWMA Landfill Gas-to-Energy (LFGTE) Plant
LFGTE - Electricity Generators (Net Increase 2018 to 2050)

Stationary Sources

Equipment Type	Equipment Description	Number (ea)	Fuel Type	Annual Throughput (scf)[1]	Emission Controls
2018 LFGTE Plant[1]	Caterpillar 3516 LFG Electricity Generators	4	LFG	589 865 298	Woodward EGS-3 electronic engine controls
2050 LFGTE Plant[2]	Caterpillar 3516 LFG Electricity Generators	6	LFG	880 464 937	Woodward EGS-3 electronic engine controls

[1] Source: 2018 Title V Emission Statement and 2018 Methane Emissions Annual Report
[2] LFGTE Plant likely operate an average of 4.5 of 6 engines in 2018, with ~25% available capacity.

Source ID:	**E1, E2, E3, E4, E5, and E6**		
Fuel Type:	LFG		
Engine Make/Model	Caterpillar Model G3516		
Engine Rating:	808	ekW	spec sheet
Brake Horsepower Rating:	1 148	bhp	spec sheet
Fuel Consumption:	7 296	BTU/bhp-hr	spec sheet
Fuel Consumption:	16 752	scf/hr	
Heat Rating [1]:	8 375 808	Btu/hr	
Daily Hours of Operation:	24	hours	
Annual Hours of Operation:	8 760	hours	

HOURLY, DAILY, AND ANNUAL CRITERIA EMISSIONS

Criteria Pollutant	Emission Factor [2]	Engine Specific Emission Factor [3]	Single Engine Emissions			Total Criteria Emissions (2050 Net 2 Additional Engines)		
			Hourly [4a, 4b]	Daily	Annual	Hourly	Daily	Annual
	(lb/MMBtu)	(g/bhp-hr)	(lbs/hour)	(lbs/day)	(tons/year)	(lbs/hour)	(lbs/day)	(tons/year)
NO_x	--	0,60	1,52	36,44	6,65	3,04	72,89	13,30
CO	--	2,50	6,33	151,85	27,71	12,65	303,70	55,43
VOC (TNMHC)	--	1,35	3,42	82,00	14,97	6,83	164,00	29,93
PM_{10} [5]	7,71E-05	---	0,00	0,02	0,00	0,00	0,03	0,01
$PM_{2.5}$ [5]	7,71E-05	---	0,00	0,02	0,00	0,00	0,03	0,01
SOx [5]	5,88E-04	---	0,00	0,12	0,02	0,01	0,24	0,04
CO_2 [2]	1,15E+02	---	961,50	23 075,93	4 211,36	1922,99	46151,87	8422,72
CH_4 [2]	7,05E-03	---	0,06	1,42	0,26	0,12	2,84	0,52
N_2O [2]	1,39E-03	---	0,01	0,28	0,05	0,02	0,56	0,10

Notes
1. Heat Rating (Btu/hr) = Fuel Consumption (scf/hr) x Higher Heating Value (Btu/scf)
Average LFG higher heating value of: 500 Btu/scf.
2. Emission Factor Source: EPA Emission Factors for GHG Inventories, modified March 9, 2018 (https://www.epa.gov/sites/production/files/2018-03/documents/emission-factors_mar_2018_0.pdf)
3. Engine specific emission factors are based on Permit Limits
4a. Hourly Emissions (lb/hr) = Emission Factor (lb/MMBtu) x Btu Rating (MMBtu/hr)
4b. Hourly Emissions (lb/hr) = Emission Factor (g/bhp-hr) x BHP Rating (bhp)
5. AP-42 Table 3.2-2 for SOx, PM10

Stationary Sources

Equipment Type	Equipment Description	Number (ea)	Fuel Type	Annual Throughput (scf)[1]	Emission Controls
2018 LFGTE Plant[1]	Caterpillar 3516 LFG Electricity Generators	4	LFG	589 865 298	Woodward EGS-3 electronic engine controls
2050 LFGTE Plant[2]	Caterpillar 3516 LFG Electricity Generators	6	LFG	880 464 937	Woodward EGS-3 electronic engine controls

[1] Source: 2018 Title V Emission Statement and 2018 Methane Emissions Annual Report
[2] LFGTE Plant likely operate an average of 4.5 of 6 engines in 2018, with ~25% available capacity.

HOURLY, DAILY, AND ANNUAL HAP EMISSIONS

Hazardous Air Pollutant	CAS Number	Molecular Weight (lb/lbmol)	Conc. In LFG (ppmv)	Emission Factor [2]	Compound Specific Engine Destruction Efficiency	Single Engine Emissions			Total TAC/HAP Emissions (Net 2 Additional Engines)			
						Hourly	Daily	Annual	Hourly	Daily	Annual	Annual
			(1)	(lb/MMscf)	(%)	(lb/hr)	(lbs/day)	(lbs/year)	(lb/hr)	(lbs/day)	(lbs/year)	(tons/year)
1,1,1-Trichloroethane (Methyl Chloroform)	71-55-6	133,42	0,1680	0,05907	97,2%	2,77E-05	6,65E-04	2,43E-01	5,54E-05	1,33E-03	4,85E-01	2,43E-04
1,1,2,2-Tetrachloroethane	79-34-5	167,85	0,0700	0,03096	97,2%	1,45E-05	3,49E-04	1,27E-01	2,90E-05	6,97E-04	2,54E-01	1,27E-04
1,1-Dichloroethane	75-34-3	98,96	0,7410	0,19323	97,2%	9,06E-05	2,18E-03	7,94E-01	1,81E-04	4,35E-03	1,59E+00	7,94E-04
1,1-Dichloroethene	75-35-4	96,94	0,0920	0,02350	97,2%	1,10E-05	2,65E-04	9,66E-02	2,20E-05	5,29E-04	1,93E-01	9,66E-05
1,2-Dichloroethane (Ethylene Dichloride)	107-06-2	98,96	0,1200	0,03129	97,2%	1,47E-05	3,52E-04	1,29E-01	2,94E-05	7,05E-04	2,57E-01	1,29E-04
1,2-Dichloropropane (Propylene Dichloride)	78-87-5	112,98	0,0230	0,00685	97,2%	3,21E-06	7,71E-05	2,81E-02	6,42E-06	1,54E-04	5,63E-02	2,81E-05
Acrylonitrile	107-13-1	53,06	0,0360	0,00503	97,2%	2,36E-06	5,67E-05	2,07E-02	4,72E-06	1,13E-04	4,14E-02	2,07E-05
Benzene	71-43-2	78,11	0,9720	0,20007	97,2%	9,38E-05	2,25E-03	8,22E-01	1,88E-04	4,50E-03	1,64E+00	8,22E-04
Carbon Disulfide	75-15-0	76,13	0,3200	0,06420	97,2%	3,01E-05	7,23E-04	2,64E-01	6,02E-05	1,45E-03	5,28E-01	2,64E-04
Carbon Tetrachloride	56-23-5	153,84	0,0070	0,00284	97,2%	1,33E-06	3,19E-05	1,17E-02	2,66E-06	6,39E-05	2,33E-02	1,17E-05
Carbonyl Sulfide	75-15-0	76,13	0,1830	0,03671	97,2%	1,72E-05	4,13E-04	1,51E-01	3,44E-05	8,27E-04	3,02E-01	1,51E-04
Chlorobenzene	108-90-7	112,56	0,2270	0,06733	97,2%	3,16E-05	7,58E-04	2,77E-01	6,32E-05	1,52E-03	5,53E-01	2,77E-04
Chloroethane (Ethyl Chloride)	75-00-3	64,52	0,2390	0,04063	97,2%	1,91E-05	4,57E-04	1,67E-01	3,81E-05	9,15E-04	3,34E-01	1,67E-04
Chloroform	67-66-3	119,39	0,0210	0,00661	97,2%	3,10E-06	7,44E-05	2,71E-02	6,20E-06	1,49E-04	5,43E-02	2,71E-05
Dichloromethane (Methylene Chloride)	75-09-2	84,94	3,3950	0,75990	97,2%	3,56E-04	8,55E-03	3,12E+00	7,13E-04	1,71E-02	6,24E+00	3,12E-03
Ethylbenzene	100-41-4	106,16	6,7890	1,89921	97,2%	8,91E-04	2,14E-02	7,80E+00	1,78E-03	4,28E-02	1,56E+01	7,80E-03
Hexane	110-54-3	86,17	2,3240	0,52771	97,2%	2,48E-04	5,94E-03	2,17E+00	4,95E-04	1,19E-02	4,34E+00	2,17E-03
Mercury (Total)*	7439-97-6	200,61	0,0003	0,00015	0,0%	2,59E-06	6,21E-05	2,27E-02	5,17E-06	1,24E-04	4,53E-02	2,27E-05
Methyl Ethyl Ketone	78-93-3	72,11	10,5570	2,00605	97,2%	9,41E-04	2,26E-02	8,24E+00	1,88E-03	4,52E-02	1,65E+01	8,24E-03
Methyl Isobutyl Ketone	108-10-1	100,16	0,7500	0,19795	97,2%	9,28E-05	2,23E-03	8,13E-01	1,86E-04	4,46E-03	1,63E+00	8,13E-04
Perchloroethylene (Tetrachloroethylene)	127-18-4	165,83	1,1930	0,52133	97,2%	2,45E-04	5,87E-03	2,14E+00	4,89E-04	1,17E-02	4,28E+00	2,14E-03
Toluene	108-88-3	92,13	25,4050	6,16774	97,2%	2,89E-03	6,94E-02	2,53E+01	5,79E-03	1,39E-01	5,07E+01	2,53E-02
Trichloroethylene (Trichloroethene)	79-01-6	131,38	0,6810	0,23577	97,2%	1,11E-04	2,65E-03	9,69E-01	2,21E-04	5,31E-03	1,94E+00	9,69E-04
Vinyl Chloride	75-01-4	62,50	1,0770	0,17738	97,2%	8,32E-05	2,00E-03	7,29E-01	1,66E-04	3,99E-03	1,46E+00	7,29E-04
Xylenes	1330-20-7	106,16	16,5820	4,63877	97,2%	2,18E-03	5,22E-02	1,91E+01	4,35E-03	1,04E-01	3,81E+01	1,91E-02
Hydrochloric Acid (HCl)**	7647-01-0	36,46	74,0000	7,10974	0,0%	1,19E-01	2,86E+00	1,04E+03	2,38E-01	5,72E+00	2,09E+03	1,04E+00
TOTAL EMISSIONS:						**0,13**	**3,06**	**1116,88**	**0,25**	**6,12**	**2233,77**	**1,12**

Note:
1. Average concentration of compounds found in LFG based on "Waste Industry Air Coalition Comparison of Recent Landfill Gas Analyses with Historic AP-42 Values." *Mercury concentration is based on the Revised EPA AP-42 Section 2.4 Table 2.41 (11/98). **HCl default value based on chlorinated compounds in LFG, forming HCl when combusted in control equipment, default 0f 74 ppmv for landfills with majority of waste after 1992.

2. Emission Conversion from ppmv to lb/MMscf example:
EF (lb/MMscf) = ppmv x lb/lbmol x 1 scf / 0.7302 scf-atm/lbmol-^{o}R/519.7 ^{o}R

Jacobs

Summary of LFG Generation Results for LandGEM Model Runs
WPWMA

Year	LFG Baseline (1979-2050) (cf/yr)	No Future Diversion			PC1&PC2	Plan Concept 1				Plan Concept 2		
		LFG (1979-2018) (cf/yr)	LFG (2019-2050) (cf/yr)	Total LFG (1979-2050) (cf/yr)	LFG (1979-2018) (cf/yr)	LFG (2019-2025) (cf/yr)	LFG (2026-2030) (cf/yr)	LFG (2031-2050) (cf/yr)	Total LFG (1979-2050) (cf/yr)	LFG (2019-2028) (cf/yr)	LFG (2029-2050) (cf/yr)	Total LFG (1979-2050) (cf/yr)
k	0,0325	0,0325	0,0325	0,0325	0,0325	0,0325	0,027	0,024	varies	0,0325	0,024	varies
Lo	115	115	100	varies	115	100	80	65	varies	100	65	varies
1979	0,0	0,0		0,0	0,0				0,0			0,0
1980	418854,9	418854,9		418854,9	418854,9				418854,9			418854,9
1981	9824612,4	9824612,4		9824612,4	9824612,4				9824612,4			9824612,4
1982	19207020,1	19207020,1		19207020,1	19207020,1				19207020,1			19207020,1
1983	28745861,1	28745861,1		28745861,1	28745861,1				28745861,1			28745861,1
1984	45005840,9	45005840,9		45005840,9	45005840,9				45005840,9			45005840,9
1985	69529285,4	69529285,4		69529285,4	69529285,4				69529285,4			69529285,4
1986	97552865,2	97552865,2		97552865,2	97552865,2				97552865,2			97552865,2
1987	128915934,1	128915934,1		128915934,1	128915934,1				128915934,1			128915934,1
1988	161392122,3	161392122,3		161392122,3	161392122,3				161392122,3			161392122,3
1989	204787389,0	204787389,0		204787389,0	204787389,0				204787389,0			204787389,0
1990	242591295,4	242591295,4		242591295,4	242591295,4				242591295,4			242591295,4
1991	279071619,2	279071619,2		279071619,2	279071619,2				279071619,2			279071619,2
1992	313551702,5	313551702,5		313551702,5	313551702,5				313551702,5			313551702,5
1993	347270477,6	347270477,6		347270477,6	347270477,6				347270477,6			347270477,6
1994	380716553,7	380716553,7		380716553,7	380716553,7				380716553,7			380716553,7
1995	409760950,8	409760950,8		409760950,8	409760950,8				409760950,8			409760950,8
1996	439699579,7	439699579,7		439699579,7	439699579,7				439699579,7			439699579,7
1997	468603270,2	468603270,2		468603270,2	468603270,2				468603270,2			468603270,2
1998	495495702,5	495495702,5		495495702,5	495495702,5				495495702,5			495495702,5
1999	526849838,1	526849838,1		526849838,1	526849838,1				526849838,1			526849838,1
2000	562566283,5	562566283,5		562566283,5	562566283,5				562566283,5			562566283,5
2001	605719917,3	605719917,3		605719917,3	605719917,3				605719917,3			605719917,3
2002	651220017,4	651220017,4		651220017,4	651220017,4				651220017,4			651220017,4
2003	699656135,6	699656135,6		699656135,6	699656135,6				699656135,6			699656135,6
2004	736516409,5	736516409,5		736516409,5	736516409,5				736516409,5			736516409,5
2005	773992128,8	773992128,8		773992128,8	773992128,8				773992128,8			773992128,8
2006	812937745,1	812937745,1		812937745,1	812937745,1				812937745,1			812937745,1
2007	853887826,8	853887826,8		853887826,8	853887826,8				853887826,8			853887826,8
2008	886281123,0	886281123,0		886281123,0	886281123,0				886281123,0			886281123,0
2009	912037351,7	912037351,7		912037351,7	912037351,7				912037351,7			912037351,7
2010	932655587,7	932655587,7		932655587,7	932655587,7				932655587,7			932655587,7
2011	952087564,2	952087564,2		952087564,2	952087564,2				952087564,2			952087564,2
2012	969239502,2	969239502,2		969239502,2	969239502,2				969239502,2			969239502,2
2013	986124691,2	986124691,2		986124691,2	986124691,2				986124691,2			986124691,2
2014	1005676432,1	1005676432,1		1005676432,1	1005676432,1				1005676432,1			1005676432,1
2015	1025998469,4	1025998469,4		1025998469,4	1025998469,4				1025998469,4			1025998469,4
2016	1049537698,7	1049537698,7		1049537698,7	1049537698,7				1049537698,7			1049537698,7
2017	1077033114,6	1077033114,6		1077033114,6	1077033114,6				1077033114,6			1077033114,6
2018	1109638447,2	1109638447,2	0,0	1109638447,2	1109638447,2	0,0			1109638447,2	0,0		1109638447,2
2019	1143906419,0	1143906419,0	60653470,4	1204559889,4	1143906419,0	60653470,4			1204559889,4	60653470,4		1204559889,4
2020	1177078585,0	1107327094,1	120580460,8	1227907554,9	1107327094,1	120580460,8			1227907554,9	120580460,8		1227907554,9
2021	1209189986,5	1071917486,4	179828463,7	1251745950,0	1071917486,4	179828463,7			1251745950,0	179828463,7		1251745950,0
2022	1240274544,0	1037640191,2	238443937,9	1276084129,1	1037640191,2	238443937,9			1276084129,1	238443937,9		1276084129,1
2023	1270365093,5	1004458999,9	296472351,9	1300931351,8	1004458999,9	296472351,9			1300931351,8	296472351,9		1300931351,8
2024	1299493420,9	972338861,9	353958224,7	1326297086,6	972338861,9	353958224,7			1326297086,6	353958224,7		1326297086,6
2025	1327690295,8	941245847,1	410945166,8	1352191013,9	941245847,1	410945166,8	0,0		1352191013,9	410945166,8		1352191013,9
2026	1354985503,7	911147110,8	467475919,2	1378623030,1	911147110,8	467475919,2	46419051,7		1425042081,7	467475919,2		1378623030,1
2027	1381407877,7	882010858,4	523592392,1	1405603250,5	882010858,4	452527184,6	89002073,3		1423540116,3	523592392,1		1405603250,5
2028	1406985329,0	853806311,9	579335701,9	1433142013,8	853806311,9	438056473,8	131327127,5		1423189913,3	579335701,9	0,0	1433142013,8
2029	1431744876,0	826503677,7	634746207,4	1461249885,1	826503677,7	424048500,9	173418614,0		1423970792,7	627015548,4	31899834,1	1485419060,2
2030	1455712673,3	800074114,9	689863545,5	1489937660,4	800074114,9	410488468,7	215300633,1	0,0	1425863216,8	606965127,2	60973692,8	1468012934,9
2031	1478914039,2	774489704,8	744726665,5	1519216370,2	774489704,8	397362053,1	256997000,7	34302295,1	1463151053,7	587555869,4	89954692,3	1452000266,5
2032	1501373482,3	749723421,4	799373862,6	1549097284,0	749723421,4	384655388,1	250150919,7	64524326,8	1449054056,1	568767272,1	118856967,0	1437347660,5
2033	1523114727,4	725749103,1	853842810,9	1579591914,0	725749103,1	372355051,2	243487209,8	94650374,3	1436241738,3	550579488,2	147694554,5	1424023145,7
2034	1544160740,7	702541424,7	908170595,0	1610712019,7	702541424,7	360448048,8	237001012,8	124695127,9	1424685614,2	532973304,9	176481403,0	1411996132,6
2035	1564533754,1	680075871,1	962393741,3	1642469612,4	680075871,1	348921803,3	230687600,1	154673177,8	1414358452,2	515930124,4	205231378,2	1401237373,6
2036	1584255288,5	658328710,8	1016548248,7	1674876959,4	658328710,8	337764138,8	224542368,8	184599021,7	1405234240,1	499431942,9	233958270,2	1391718923,9
2037	1603346176,4	637276971,4	1070669617,5	1707946588,9	637276971,4	326963269,1	218560838,9	214487071,7	1397288151,0	483461332,9	262675800,6	1383414104,9
2038	1621826584,6	616898415,1	1124792879,4	1741691294,5	616898415,1	316507784,8	212738649,5	244351661,4	1390496510,7	468001423,9	291397628,8	1376297467,8
2039	1639716034,6	597171515,0	1178952625,1	1776124140,1	597171515,0	306386641,2	207071556,0	274207053,5	1384836765,8	453035884,9	320137359,3	1370344759,2
2040	1657033423,8	578075433,0	1233183032,1	1811258465,1	578075433,0	296589147,0	201555426,8	304067446,6	1380287453,4	438548907,1	348908547,7	1365532887,8
2041	1673797045,3	559589996,8	1287517892,0	1847107888,8	559589996,8	287104952,7	196186240,5	333946982,1	1376828172,0	424525187,5	377724708,3	1361839892,5
2042	1690024607,2	541695679,6	1341990636,8	1883686316,4	541695679,6	277924039,7	190960082,6	363859751,1	1374439553,0	410949912,0	406599319,6	1359244911,2
2043	1705733251,5	524373578,8	1396634365,0	1921007943,8	524373578,8	269036709,7	185873143,1	393819801,7	1373103233,4	397808740,5	435545831,7	1357728151,1
2044	1720939571,8	507605396,4	1451481866,6	1959087263,1	507605396,4	260433574,9	180921713,3	423841145,6	1372801830,2	385087791,6	464577672,4	1357270860,4
2045	1735659631,3	491373419,4	1506565648,5	1997939067,9	491373419,4	252105547,2	176102183,5	453937764,6	1373518914,6	372773627,4	493708253,5	1357855300,3
2046	1749908979,3	475660501,2	1561917958,2	2037578459,5	475660501,2	244043829,4	171411040,0	484123617,8	1375238988,4	360853240,0	522950977,9	1359464719,1
2047	1763702668,1	460450043,7	1617570808,5	2078020852,2	460450043,7	236239905,6	166844862,7	514412648,3	1377947460,2	349314037,5	552319245,1	1362083326,2
2048	1777055268,5	445725979,3	1673556000,2	2119281979,5	445725979,3	228685532,1	162400322,7	544818789,5	1381630623,6	338143830,3	581826458,2	1365696267,8
2049	1789980885,4	431472754,4	1729905145,4	2161377899,9	431472754,4	221372729,1	158074179,7	575355972,0	1386275635,2	327330819,0	611486030,2	1370289603,6
2050	1802493172,8	417675312,8	1786649690,4	2204325003,2	417675312,8	214293771,5	153863279,8	606038130,4	1391870494,5	316863581,3	641311389,9	1375850284,0

Note: This table provides a summary of the LandGem model results, which were initailly set up to provide a conservative estimate of landfill gas generation.
This analysis is noted to include an overlap in waste placement throughput, when waste diversion rates are adjusted.
Therfore, this analysis data will be used for a conservative estimate of criteria pollutant and toxic emissions.

Jacobs

Summary of LFG Generation Results for LandGEM Model Runs
WPWMA

Year	LFG Baseline (1979-2050) (cf/yr)	No Future Diversion			PC1&PC2	Plan Concept 1				Plan Concept 2		
		LFG (1979-2018) (cf/yr)	LFG (2019-2050) (cf/yr)	Total LFG (1979-2050) (cf/yr)	LFG (1979-2018) (cf/yr)	LFG (2019-2025) (cf/yr)	LFG (2026-2030) (cf/yr)	LFG (2031-2050) (cf/yr)	Total LFG (1979-2050) (cf/yr)	LFG (2019-2028) (cf/yr)	LFG (2029-2050) (cf/yr)	Total LFG (1979-2050) (cf/yr)
k	0,0325	0,0325	0,0325	0,0325	0,0325	0,0325	0,027	0,024	varies	0,0325	0,024	varies
Lo	115	115	100	varies	115	100	80	65	varies	100	65	varies
1979	0,0	0,0		0,0	0,0				0,0			0,0
1980	418854,9	418854,9		418854,9	418854,9				418854,9			418854,9
1981	9824612,4	9824612,4		9824612,4	9824612,4				9824612,4			9824612,4
1982	19207020,1	19207020,1		19207020,1	19207020,1				19207020,1			19207020,1
1983	28745861,1	28745861,1		28745861,1	28745861,1				28745861,1			28745861,1
1984	45005840,9	45005840,9		45005840,9	45005840,9				45005840,9			45005840,9
1985	69529285,4	69529285,4		69529285,4	69529285,4				69529285,4			69529285,4
1986	97552865,2	97552865,2		97552865,2	97552865,2				97552865,2			97552865,2
1987	128915934,1	128915934,1		128915934,1	128915934,1				128915934,1			128915934,1
1988	161392122,3	161392122,3		161392122,3	161392122,3				161392122,3			161392122,3
1989	204787389,0	204787389,0		204787389,0	204787389,0				204787389,0			204787389,0
1990	242591295,4	242591295,4		242591295,4	242591295,4				242591295,4			242591295,4
1991	279071619,2	279071619,2		279071619,2	279071619,2				279071619,2			279071619,2
1992	313551702,5	313551702,5		313551702,5	313551702,5				313551702,5			313551702,5
1993	347270477,6	347270477,6		347270477,6	347270477,6				347270477,6			347270477,6
1994	380716553,7	380716553,7		380716553,7	380716553,7				380716553,7			380716553,7
1995	409760950,8	409760950,8		409760950,8	409760950,8				409760950,8			409760950,8
1996	439699579,7	439699579,7		439699579,7	439699579,7				439699579,7			439699579,7
1997	468603270,2	468603270,2		468603270,2	468603270,2				468603270,2			468603270,2
1998	495495702,5	495495702,5		495495702,5	495495702,5				495495702,5			495495702,5
1999	526849838,1	526849838,1		526849838,1	526849838,1				526849838,1			526849838,1
2000	562566283,5	562566283,5		562566283,5	562566283,5				562566283,5			562566283,5
2001	605719917,3	605719917,3		605719917,3	605719917,3				605719917,3			605719917,3
2002	651220017,4	651220017,4		651220017,4	651220017,4				651220017,4			651220017,4
2003	699656135,6	699656135,6		699656135,6	699656135,6				699656135,6			699656135,6
2004	736516409,5	736516409,5		736516409,5	736516409,5				736516409,5			736516409,5
2005	773992128,8	773992128,8		773992128,8	773992128,8				773992128,8			773992128,8
2006	812937745,1	812937745,1		812937745,1	812937745,1				812937745,1			812937745,1
2007	853887826,8	853887826,8		853887826,8	853887826,8				853887826,8			853887826,8
2008	886281123,0	886281123,0		886281123,0	886281123,0				886281123,0			886281123,0
2009	912037351,7	912037351,7		912037351,7	912037351,7				912037351,7			912037351,7
2010	932655587,7	932655587,7		932655587,7	932655587,7				932655587,7			932655587,7
2011	952087564,2	952087564,2		952087564,2	952087564,2				952087564,2			952087564,2
2012	969239502,2	969239502,2		969239502,2	969239502,2				969239502,2			969239502,2
2013	986124691,2	986124691,2		986124691,2	986124691,2				986124691,2			986124691,2
2014	1005676432,1	1005676432,1		1005676432,1	1005676432,1				1005676432,1			1005676432,1
2015	1025998469,4	1025998469,4		1025998469,4	1025998469,4				1025998469,4			1025998469,4
2016	1049537698,7	1049537698,7		1049537698,7	1049537698,7				1049537698,7			1049537698,7
2017	1077033114,6	1077033114,6		1077033114,6	1077033114,6				1077033114,6			1077033114,6
2018	1109638447,2	1109638447,2		1109638447,2	1109638447,2				1109638447,2			1109638447,2
2019	1143906419,0	1143906419,0	0,0	1143906419,0	1143906419,0	0,0			1143906419,0	0,0		1143906419,0
2020	1177078585,0	1107327094,1	61866539,8	1169193633,9	1107327094,1	61866539,8			1169193633,9	61866539,8		1169193633,9
2021	1209189986,5	1071917486,4	122992070,0	1194909556,4	1071917486,4	122992070,0			1194909556,4	122992070,0		1194909556,4
2022	1240274544,0	1037640191,2	183425032,9	1221065224,1	1037640191,2	183425032,9			1221065224,1	183425032,9		1221065224,1
2023	1270365093,5	1004458999,9	243212816,7	1247671816,6	1004458999,9	243212816,7			1247671816,6	243212816,7		1247671816,6
2024	1299493420,9	972338861,9	302401799,0	1274740660,8	972338861,9	302401799,0			1274740660,8	302401799,0		1274740660,8
2025	1327690295,8	941245847,1	361037389,2	1302283236,3	941245847,1	361037389,2			1302283236,3	361037389,2		1302283236,3
2026	1354985503,7	911147110,8	419164070,1	1330311180,9	911147110,8	419164070,1	0,0		1330311180,9	419164070,1		1330311180,9
2027	1381407877,7	882010858,4	476825437,6	1358836296,0	882010858,4	405760230,0	43819567,6		1331590656,0	476825437,6		1358836296,0
2028	1406985329,0	853806311,9	534064240,0	1387870551,9	853806311,9	392785011,9	87348227,6		1333939551,5	534064240,0		1387870551,9
2029	1431744876,0	826503677,7	590922415,9	1417426093,6	826503677,7	380224709,5	130611257,4		1337339644,6	583191756,9	0,0	1409695434,7
2030	1455712673,3	800074114,9	647441131,5	1447515246,4	800074114,9	368066054,8	173633611,3		1341773781,0	564542713,3	29830340,6	1394447168,8
2031	1478914039,2	774489704,8	703660816,4	1478150521,1	774489704,8	356296204,0	216439936,7	0,0	1347225845,5	546490020,3	59549882,7	1380529607,8
2032	1501373482,3	749723421,4	759621198,8	1509344620,2	749723421,4	344902724,3	210674245,5	31035486,4	1336335877,5	529014608,3	89173185,8	1367911215,5
2033	1523114727,4	725749103,1	815361339,9	1541110442,9	725749103,1	333873580,1	205062145,2	61955697,9	1326640526,3	512098017,1	118714703,1	1356561823,3
2034	1544160740,7	702541424,7	870919667,1	1573461091,8	702541424,7	323197121,0	199599544,2	92775782,5	1318113872,4	495722377,1	148188788,2	1346452590,0
2035	1564533754,1	680075871,1	926334006,9	1606409877,9	680075871,1	312862068,8	194282460,2	123510777,1	1310731177,1	479870389,9	177609702,6	1337555963,6
2036	1584255288,5	658328710,8	981641616,2	1639970326,9	658328710,8	302857506,3	189107016,6	154175615,2	1304468848,9	464525310,4	206991623,1	1329845644,3
2037	1603346176,4	637276971,4	1036879213,6	1674156185,0	637276971,4	293172865,2	184069440,5	184785134,6	1299304411,7	449670929,0	236348648,4	1323296548,8
2038	1621826584,6	616898415,1	1092083009,9	1708981424,9	616898415,1	283797915,2	179166059,1	215354084,7	1295216474,1	435291554,3	265694806,4	1317884775,8
2039	1639716034,6	597171515,0	1147288737,0	1744460252,1	597171515,0	274722753,1	174393297,7	245897133,8	1292184699,7	421371996,8	295044061,0	1313587572,8
2040	1657033423,8	578075433,0	1202531677,6	1780607110,6	578075433,0	265937792,5	169747676,8	276428876,6	1290189778,8	407897552,6	324410319,2	1310383304,8
2041	1673797045,3	559589996,8	1257846692,7	1817436689,5	559589996,8	257433753,4	165225809,4	306963841,1	1289213400,7	394853988,2	353807437,9	1308251422,9
2042	1690024607,2	541695679,6	1313268249,8	1854963929,4	541695679,6	249201652,7	160824399,0	337516496,1	1289238227,4	382227525,0	383249230,3	1307172434,9
2043	1705733251,5	524373578,8	1368830449,6	1893204028,4	524373578,8	241232794,3	156540236,7	368101258,4	1290247868,2	370004825,1	412749473,2	1307127877,1
2044	1720939571,8	507605396,4	1424567052,3	1932172448,7	507605396,4	233518760,5	152370199,1	398732499,2	1292226855,3	358172977,3	442321913,3	1308100287,0
2045	1735659631,3	491373419,4	1480511504,0	1971884923,4	491373419,4	226051402,6	148311246,2	429424551,9	1295160620,1	346719482,9	471980274,0	1310073176,3
2046	1749908979,3	475660501,2	1536696961,4	2012357462,7	475660501,2	218822832,6	144360418,7	460191718,6	1299035471,1	335632243,2	501738262,0	1313031006,4
2047	1763702668,1	460450043,7	1593156317,4	2053606361,1	460450043,7	211825414,5	140514836,4	491048277,1	1303838571,6	324899546,3	531609573,6	1316959163,7
2048	1777055268,5	445725979,3	1649922224,7	2095648204,0	445725979,3	205051756,6	136771695,6	522008487,7	1309557919,3	314510054,8	561607901,9	1321843936,0
2049	1789980885,4	431472754,4	1707027120,2	2138499874,6	431472754,4	198494703,8	133128267,4	553086600,4	1316182326,1	304452793,7	591746942,6	1327672490,8
2050	1802493172,8	417675312,8	1764503248,3	2182178561,1	417675312,8	192147329,5	129581895,7	584296861,2	1323701399,1	294717139,3	622040400,8	1334432852,8

Note: The LandGem model runs were updated in this summary table to provide a more representative estimate of landfill gas generation.
This analysis does not include an overlap in waste placement throughput, when waste diversion rates are adjusted.
Therfore, this analysis data will be used for a more representative estimate of greenhouse gas emissions.

WPWMA Landfill Criteria Emissions
Plan Concept 1: Fugitive LFG and Flares
Net Increase in 2050 from 2018 Baseline

Table. LFG Parameters

Parameter	Units	
Number of Flares	n/a	2
LFG Heat Content	Btu/scf	500
Methane Content LFG by Vol	%	50%
Conversion	scf/lbmol	385,15
VOC MW (Hexane)	lb/lbmole	86,2
CO MW	lb/lbmole	28,0
VOC Emission Factor[1]	ppm as hexane	595
CO Emission Factor[2]	ppm	141
Methane MW	lb/lbmole	16,04
CO_2 MW	lb/lbmole	44,01
CO_2 mass/CH_4 mass combusted	lb/lb	2,74
AR5 GWP for CH_4	Unitless	28
AR5 GWP for N_2O	Unitless	265
Hours of Operation	hours/day	24
Days of Operation	days/yr	365
LFG Collection Efficiency		80%
Max. Hourly Flared LFG	MMscf/hr	0,013
Max. Daily Flared LFG	MMscf/day	0,307
Max. Yearly Flared LFG	MMscf/yr	112
CH4 Flare Control, Eff	n/a	0,99
Max Heat Input Rate	MMBtu/hr	6,4
Max Heat Input Rate	MMBtu/yr	56 113
Max. Hourly Fugitive LFG	MMscf/hr	0,0064
Max. Daily Fugitive LFG	MMscf/day	0,1546
Max. Yearly Fugitive LFG	MMscf/yr	56,4464

Notes:
1. VOC Emission factor obtained from AP-42 Section 2.4 - Municipal Solid Waste Landfills, Tables 2.4-2, dated October 2008.
2. CO Emission factor obtained from AP-42 Section 2.4 - Municipal Solid Waste Landfills, Tables 2.4-2, dated October 2008.

Table LFG. Criteria Pollutant Emissions From Fugitive Landfill Gas

Pollutant	Total Fugitive Landfill Gas Emissions			
	Total Hourly Emissions (lb/hr)	Total Daily Emissions (lb/day)	Total Annual Emissions (lb/yr)	Total Annual Emissions (tpy)
VOC	0,86	20,6	7 515	3,8
CO	0,07	1,6	579	0,29

Source ID:	Small Flare at LFGTE		New Flare Zone A & B	
Fuel Type:	LFG		LFG	
Rating LFG Throughput:	27 800	scf/hr	180 000	scf/hr
Heat Rating [1]:	13,9	MMBtu/hr	90,0	MMBtu/hr
Ratio of LFG:	0,134		0,866	

Emission Factors for Flares

Emission Factor	Units	Value	Source
PM_{10}	lb/MMBtu	0,034	
$PM_{2.5}$	lb/MMBtu	0,034	
NO_x	lb/MMBtu	0,06	Permit Limit
CO	lb/MMBtu	0,2	Permit Limit
SO_x	lb/MMcf	33,2	Permit Limit
VOC	ppm	20	NMOC Permit Limit
VOC	lb/MMBtu	0,0455	Calc'd Controlled Limit

Notes:
1. Emission factors for CO and NOx from Permit Limits
2. For VOC, NMOC limit from permit
3. EPA 2018 GHG Factors: https://www.epa.gov/sites/production/files/2018-03/documents/emission-factors_mar_2018_0.pdf
4. EF for SO2 = 200 ppmv(64)/385

Gas Properties for Emission Factor Conversion			
Property	Value	Units	
Molar Volume	385,15	dscf/lb-mol at 1 atm and 60°F	
Fd Factor	8710	scf/MMBtu	Ref:EPA Mtd 19, Table 19-2
Corrected O2	3%		
Molar Weight	86,18	VOC as hexane	

Table. Emissions for Flares - Criteria Pollutants

Pollutant	Total Flare Emissions				Small Flare Emissions		Large Flare Emissions	
	Total Hourly Emissions (lb/hr)	Total Daily Emissions (lb/day)	Total Annual Emissions (lb/yr)	Total Annual Emissions (tpy)	Total Hourly Emissions (lb/hr)	Total Annual Emissions (lb/yr)	Total Hourly Emissions (lb/hr)	Total Annual Emissions (lb/yr)
PM_{10}	0,22	5,23	1 908	0,95	0,03	255,24	0,19	1 653
$PM_{2.5}$	0,22	5,23	1 908	0,95	0,03	255,24	0,19	1 653
NOx	0,4	9,22	3 367	1,68	0,05	450,42	0,33	2 916
VOC	0,29	7,00	2 554	1,28	0,04	341,65	0,25	2 212
CO	1,3	30,75	11 223	5,61	0,17	1501,40	1,11	9 721
SOx	0,43	10,22	3 731	1,87	0,06	499,17	0,37	3 232

WPWMA Landfill GHG Emissions
Plan Concept 1: Fugitive LFG and Flares
Net Increase in 2050 from 2018 Baseline

Table. LFG Parameters

Parameter	Units	
Number of Flares	n/a	2
LFG Heat Content	Btu/scf	500
Methane Content LFG by Vol	%	50%
Conversion	scf/lbmol	385,15
VOC MW (Hexane)	lb/lbmole	86,2
CO MW	lb/lbmole	28,0
VOC Emission Factor[1]	ppm as hexane	595
CO Emission Factor[2]	ppm	141
Methane MW	lb/lbmole	16,04
CO_2 MW	lb/lbmole	44,01
CO_2 mass/CH_4 mass combusted	lb/lb	2,74
AR5 GWP for CH_4	Unitless	28
AR5 GWP for N_2O	Unitless	265
Hours of Operation	hours/day	24
Days of Operation	days/yr	365
LFG Collection Efficiency		80%
Max. Hourly Flared LFG	MMscf/hr	0,007
Max. Daily Flared LFG	MMscf/day	0,158
Max. Yearly Flared LFG	MMscf/yr	58
CH4 Flare Control, Eff	n/a	0,99
Max Heat Input Rate	MMBtu/hr	3,3
Max Heat Input Rate	MMBtu/yr	28 846
Max. Hourly Fugitive LFG	MMscf/hr	0,0049
Max. Daily Fugitive LFG	MMscf/day	0,1173
Max. Yearly Fugitive LFG	MMscf/yr	42,8126

Table LFG. Greenhouse Gas Emissions from Fugitive Landfill Gas

Pollutant	Total Fugitive Landfill Gas Emissions			
	Total Hourly Emissions (lb/hr)	Total Daily Emissions (lb/day)	Total Annual Emissions (lb/yr)	Total Annual Emissions (tpy)
CO_2 (biogenic)	279	6 688	2 441 037	1 221
CH_4 (non-biogenic)	102	2 437	889 667	445
CO_2e (non-biogenic)	2 844	68 248	24 910 673	12 455
CO_2e (biogenic)	279	6 688	2 441 037	1 221

Notes:

1. Methane and CO2 generation is based on the LandGEM values.
2. Fugitive CO2 mass/Fugitive methane mass estimated to be 500, based on the compostion of landfill gas.

Source ID:	Small Flare at LFGTE		New Flare Zone A & B	
Fuel Type:	LFG		LFG	
Rating LFG Throughput:	27 800	scf/hr	180 000	scf/hr
Heat Rating [1]:	13,9	MMBtu/hr	90,0	MMBtu/hr
Ratio of LFG:	0,134		0,866	

Emission Factors for Flares

Emission Factor	Units	Value	Source
N_2O	g/MMBtu	0,63	EPA GHG EFs

Notes:

1. EPA 2018 GHG Factors: https://www.epa.gov/sites/production/files/2018-03/documents/emission-factors_mar_2018_0.pdf

Gas Properties for Emission Factor Conversion		
Property	Value	Units
Molar Volume	385,15	dscf/lb-mol at 1 atm and 60°F
Fd Factor	8710	scf/MMBtu
Corrected O2	3%	
Molar Weight	86,18	VOC as hexane

Ref:EPA Mtd 19, Table 19-2

Emissions for Flares - Greenhouse Gas

GHG Pollutant	Total Flare Emissions			Small Flare Emissions		Large Flare Emissions	
	Total Annual Emissions (lb/yr)	Total Annual Emissions (tpy)	Total Annual Emissions (MT/yr)	Total Annual Emissions (lb/yr)	Total Annual Emissions (MT/yr)	Total Annual Emissions (lb/yr)	Total Annual Emissions (MT/yr)
CO_2 (non-biogenic)[1]	3 263 117	1 632	1 480	436 548	198,02	2 826 569	1 282
CO_2 (biogenic)[2]	6 031 822	3 016	2 736	806 952	366,03	5 224 870	2 370
CH_4 (non-biogenic)[3]	12 015	6	5	1 607	0,73	10 408	4,72
N_2O (non-biogenic)[4]	40,06	0,02	0,02	5,36	0,00	34,70	0,02
CO_2e (non-biogenic)	3 610 153	1 805	1 638	482 975	219,07	3 127 178	1 418
CO_2e (biogenic)	6 031 822	3 016	2 736	806 952	366,03	5 224 870	2 370

Notes:

1. Non-biogenic CO_2 is combustion CO_2 from 99% non-biogenic CH_4 destroyed in the flare.
2. Biogenic CO_2 is CO_2 from LFG that passes through the flare.
3. Non-biogenic CH_4 is the 1% of CH_4 that is not destroyed in the flare .
4. Non-biogenic N_2O is combustion N_2O from methane destroyed. 0.63 g/MMBtu EF from LFG combustion from: https://www.epa.gov/sites/production/files/2018-03/documents/emission-factors_mar_2018_0.pdf

Equations:

Non-biogenic CO_2 (lb/yr) = Max. Yearly Flared LFG (MMscf/yr) x (Methane Content LFG by Vol (%) x 10^6) x Flare Control Efficiency x Methane MW (lb/lb-mole) / 385.15 scf/lb-mole x CO_2 mass/CH_4 mass combusted

Biogenic CO_2 (lb/yr) = Max. Yearly Flared LFG (MMscf/yr) x (CO_2 Content LFG by Vol (%) x 10^6) x CO_2 MW (lb/lb-mole) / 385.15 scf/lb-mole

Non-biogenic CH_4 (lb/yr) = Max. Yearly Flared LFG (MMscf/yr) x (Methane Content LFG by Vol (%) x 10^6) x Methane MW (lb/lb-mole) x (1 - Flare Control Efficiency) / 385.15 scf/lb-mole

Non-biogenic N_2O (lb/yr) = Max Heat Input Rate (MMBtu/yr) x N_2O Content (g/MMBtu) / 453.59 g/lb

Non-biogenic CO_2e (lb/yr) = Non-biogenic CO_2 (lb/yr) + (Non-biogenic CH_4 (lb/yr) x GHG Constant for CH_4) + (Non-biogenic N_2O (lb/yr) x GHG Constant for N_2O)

WPWMA Landfill Criteria Emissions
Plan Concept 2: Fugitive LFG and Flares
Net Increase in 2050 from 2018 Baseline

Table. LFG Parameters

Parameter	Units	
Number of Flares	n/a	2
LFG Heat Content	Btu/scf	500
Methane Content LFG by Vol	%	50%
Conversion	scf/lbmol	385,15
VOC MW (Hexane)	lb/lbmole	86,2
CO MW	lb/lbmole	28,0
VOC Emission Factor[1]	ppm as hexane	595
CO Emission Factor[2]	ppm	141
Methane MW	lb/lbmole	16,04
CO_2 MW	lb/lbmole	44,01
CO_2 mass/CH_4 mass combusted	lb/lb	2,74
AR5 GWP for CH_4	Unitless	28
AR5 GWP for N_2O	Unitless	265
Hours of Operation	hours/day	24
Days of Operation	days/yr	365
LFG Collection Efficiency		80%
Max. Hourly Flared LFG	MMscf/hr	0,011
Max. Daily Flared LFG	MMscf/day	0,272
Max. Yearly Flared LFG	MMscf/yr	99
CH4 Flare Control, Eff	n/a	0,99
Max Heat Input Rate	MMBtu/hr	5,7
Max Heat Input Rate	MMBtu/yr	49 705
Max. Hourly Fugitive LFG	MMscf/hr	0,0061
Max. Daily Fugitive LFG	MMscf/day	0,1459
Max. Yearly Fugitive LFG	MMscf/yr	53,2424

Notes:
1. VOC Emission factor obtained from AP-42 Section 2.4 - Municipal Solid Waste Landfills, Tables 2.4-2, dated October 2008.
2. CO Emission factor obtained from AP-42 Section 2.4 - Municipal Solid Waste Landfills, Tables 2.4-2, dated October 2008.

Table LFG. Criteria Pollutant Emissions From Fugitive Landfill Gas

Pollutant	Total Fugitive Landfill Gas Emissions			
	Total Hourly Emissions (lb/hr)	Total Daily Emissions (lb/day)	Total Annual Emissions (lb/yr)	Total Annual Emissions (tpy)
VOC	0,81	19,4	7 088	3,5
CO	0,06	1,5	546	0,27

Source ID:	Small Flare at LFGTE		New Flare Zone A & B	
Fuel Type:	LFG		LFG	
Rating LFG Throughput:	27 800	scf/hr	180 000	scf/hr
Heat Rating [1]:	13,9	MMBtu/hr	90,0	MMBtu/hr
Ratio of LFG:	0,134		0,866	

Emission Factors for Flares

Emission Factor	Units	Value	Source
PM_{10}	lb/MMBtu	0,034	
$PM_{2.5}$	lb/MMBtu	0,034	
NO_x	lb/MMBtu	0,06	Permit Limit
CO	lb/MMBtu	0,2	Permit Limit
SO_x	lb/MMcf	33,2	Permit Limit
VOC	ppm	20	NMOC Permit Limit
VOC	lb/MMBtu	0,0455	Calc'd Controlled Limit

Notes:
1. Emission factors for CO and NOx from Permit Limits
2. For VOC, NMOC limit from permit
3. EPA 2018 GHG Factors: https://www.epa.gov/sites/production/files/2018-03/documents/emission-factors_mar_2018_0.pdf
4. EF for SO2 = 200 ppmv(64)/385

Gas Properties for Emission Factor Conversion		
Property	Value	Units
Molar Volume	385,15	dscf/lb-mol at 1 atm and 60°F
Fd Factor	8710	scf/MMBtu
Corrected O2	3%	
Molar Weight	86,18	VOC as hexane

Ref:EPA Mtd 19, Table 19-2

Table. Emissions for Flares - Criteria Pollutants

Pollutant	Total Flare Emissions				Small Flare Emissions		Large Flare Emissions	
	Total Hourly Emissions (lb/hr)	Total Daily Emissions (lb/day)	Total Annual Emissions (lb/yr)	Total Annual Emissions (tpy)	Total Hourly Emissions (lb/hr)	Total Annual Emissions (lb/yr)	Total Hourly Emissions (lb/hr)	Total Annual Emissions (lb/yr)
PM_{10}	0,19	4,63	1 690	0,84	0,03	226,09	0,17	1 464
$PM_{2.5}$	0,19	4,63	1 690	0,84	0,03	226,09	0,17	1 464
NOx	0,3	8,17	2 982	1,49	0,05	398,98	0,29	2 583
VOC	0,26	6,20	2 262	1,13	0,03	302,64	0,22	1 960
CO	1,1	27,24	9 941	4,97	0,15	1329,94	0,98	8 611
SOx	0,38	9,06	3 305	1,65	0,05	442,16	0,33	2 863

WPWMA Landfill GHG Emissions
Plan Concept 2: Fugitive LFG and Flares
Net Increase in 2050 from 2018 Baseline

Table. LFG Parameters

Parameter	Units	
Number of Flares	n/a	2
LFG Heat Content	Btu/scf	500
Methane Content LFG by Vol	%	50%
Conversion	scf/lbmol	385,15
VOC MW (Hexane)	lb/lbmole	86,2
CO MW	lb/lbmole	28,0
VOC Emission Factor[1]	ppm as hexane	595
CO Emission Factor[2]	ppm	141
Methane MW	lb/lbmole	16,04
CO_2 MW	lb/lbmole	44,01
CO_2 mass/CH_4 mass combusted	lb/lb	2,74
AR5 GWP for CH_4	Unitless	28
AR5 GWP for N_2O	Unitless	265
Hours of Operation	hours/day	24
Days of Operation	days/yr	365
LFG Collection Efficiency		80%
Max. Hourly Flared LFG	MMscf/hr	0,008
Max. Daily Flared LFG	MMscf/day	0,182
Max. Yearly Flared LFG	MMscf/yr	66
CH4 Flare Control, Eff	n/a	0,99
Max Heat Input Rate	MMBtu/hr	3,8
Max Heat Input Rate	MMBtu/yr	33 138
Max. Hourly Fugitive LFG	MMscf/hr	0,0051
Max. Daily Fugitive LFG	MMscf/day	0,1232
Max. Yearly Fugitive LFG	MMscf/yr	44,9589

Table LFG. Greenhouse Gas Emissions from Fugitive Landfill Gas

Pollutant	Total Fugitive Landfill Gas Emissions			
	Total Hourly Emissions (lb/hr)	Total Daily Emissions (lb/day)	Total Annual Emissions (lb/yr)	Total Annual Emissions (tpy)
CO_2 (biogenic)	293	7 023	2 563 412	1 282
CH_4 (non-biogenic)	107	2 560	934 268	467
CO_2e (non-biogenic)	2 986	71 670	26 159 500	13 080
CO_2e (biogenic)	293	7 023	2 563 412	1 282

Notes:
1. Methane and CO2 generation is based on the LandGEM values.
2. Fugitive CO2 mass/Fugitive methane mass estimated to be 500, based on the compostion of landfill gas.

Source ID:	Small Flare at LFGTE		New Flare Zone A & B	
Fuel Type:	LFG		LFG	
Rating LFG Throughput:	27 800	scf/hr	180 000	scf/hr
Heat Rating [1]:	13,9	MMBtu/hr	90,0	MMBtu/hr
Ratio of LFG:	0,134		0,866	

Emission Factors for Flares

Emission Factor	Units	Value	Source
N_2O	g/MMBtu	0,63	EPA GHG EFs

Notes:
1. EPA 2018 GHG Factors: https://www.epa.gov/sites/production/files/2018-03/documents/emission-factors_mar_2018_0.pdf

Gas Properties for Emission Factor Conversion			
Property	Value	Units	
Molar Volume	385,15	dscf/lb-mol at 1 atm and 60°F	
Fd Factor	8710	scf/MMBtu	Ref:EPA Mtd 19, Table 19-2
Corrected O2	3%		
Molar Weight	86,18	VOC as hexane	

Emissions for Flares - Greenhouse Gas

GHG Pollutant	Total Flare Emissions			Small Flare Emissions		Large Flare Emissions	
	Total Annual Emissions (lb/yr)	Total Annual Emissions (tpy)	Total Annual Emissions (MT/yr)	Total Annual Emissions (lb/yr)	Total Annual Emissions (MT/yr)	Total Annual Emissions (lb/yr)	Total Annual Emissions (MT/yr)
CO_2 (non-biogenic)[1]	3 748 707	1 874	1 700	501 511	227,48	3 247 196	1 473
CO_2 (biogenic)[2]	6 929 429	3 465	3 143	927 036	420,50	6 002 393	2 723
CH_4 (non-biogenic)[3]	13 803	7	6	1 847	0,84	11 956	5,42
N_2O (non-biogenic)[4]	46,03	0,02	0,02	6,16	0,00	39,87	0,02
CO_2e (non-biogenic)	4 147 387	2 074	1 881	554 848	251,68	3 592 539	1 630
CO_2e (biogenic)	6 929 429	3 465	3 143	927 036	420,50	6 002 393	2 723

Notes:
1. Non-biogenic CO_2 is combustion CO_2 from 99% non-biogenic CH_4 destroyed in the flare.
2. Biogenic CO_2 is CO_2 from LFG that passes through the flare.
3. Non-biogenic CH_4 is the 1% of CH_4 that is not destroyed in the flare .
4. Non-biogenic N_2O is combustion N_2O from methane destroyed. 0.63 g/MMBtu EF from LFG combustion from: https://www.epa.gov/sites/production/files/2018-03/documents/emission-factors_mar_2018_0.pdf

Equations:

Non-biogenic CO_2 (lb/yr) = Max. Yearly Flared LFG (MMscf/yr) x (Methane Content LFG by Vol (%) x 10^6) x Flare Control Efficiency x Methane MW (lb/lb-mole) / 385.15 scf/lb-mole x CO_2 mass/CH_4 mass combusted

Biogenic CO_2 (lb/yr) = Max. Yearly Flared LFG (MMscf/yr) x (CO_2 Content LFG by Vol (%) x 10^6) x CO_2 MW (lb/lb-mole) / 385.15 scf/lb-mole

Non-biogenic CH_4 (lb/yr) = Max. Yearly Flared LFG (MMscf/yr) x (Methane Content LFG by Vol (%) x 10^6) x Methane MW (lb/lb-mole) x (1 - Flare Control Efficiency) / 385.15 scf/lb-mole

Non-biogenic N_2O (lb/yr) = Max Heat Input Rate (MMBtu/yr) x N_2O Content (g/MMBtu) / 453.59 g/lb

Non-biogenic CO_2e (lb/yr) = Non-biogenic CO_2 (lb/yr) + (Non-biogenic CH_4 (lb/yr) x GHG Constant for CH_4) + (Non-biogenic N_2O (lb/yr) x GHG Constant for N_2O)

WPWMA Landfill Toxic Emissions
Plan Concept 1: Fugitive LFG and Flares
Net Increase in 2050 from 2018 Baseline

LFG Parameters

Parameter	Units	
Number of Flares	n/a	2
LFG Heat Content	Btu/scf	500
Methane Content LFG by Vol	%	50%
CO_2 Content LFG by Vol	%	42%
Hours of Operation	hours/day	24
Days of Operation	days/yr	365
Max. Hourly Fugitive LFG	MMscf/hr	0,006
Max. Daily Fugitive LFG	MMscf/day	0,15
Max. Yearly Fugitive LFG	MMscf/yr	56
LFG Collection Efficiency		80%
Max. Yearly Flared LFG	MMscf/yr	112
Max. Hourly Flared LFG	MMscf/hr	0,01
Flare Control, Eff	n/a	0.98 - 0.997
Flare Heat Input	MMBtu/yr	56 113
Flare Heat Input	MMBtu/hr	6

Source ID:	Small Flare at LFGTE		New Flare Zone A and B	
Fuel Type:	LFG		LFG	
Rating LFG Throughput:	27 800	scf/hr	180 000	scf/hr
Heat Rating [1]:	13,9	MMBtu/hr	90,0	MMBtu/hr
Ratio of LFG:	0,134		0,866	

Air Toxic Emissions From Fugitive Landfill Gas

Toxic Pollutant	CAS	Molecular Weight (lb/lbmol)	Conc. In LFG (ppmv) (1)	Uncontrolled EF (lb/MMscf LFG) (2)	Total Fugitive LFG TAC Emissions	
					Fugitive LFG Hourly Toxic Emissions (lb/hr)	Fugitive LFG Annual Toxic Emissions (lb/yr)
1,1,1-Trichloroethane (methyl chloroform)	71-55-6	133,42	0,1680	0,05907	0,0004	3,3340
1,1,2,2-Tetrachloroethane	79-34-5	167,85	0,0700	0,03096	0,0002	1,7477
1,1-Dichloroethane	75-34-3	98,96	0,7410	0,19323	0,0012	10,9074
1,1-Dichloroethene	75-35-4	96,94	0,0920	0,02350	0,0002	1,3266
1,2-Dichloroethane (Ethylene Dichloride)	107-06-2	98,96	0,1200	0,03129	0,0002	1,7664
1,2-Dichloropropane	78-87-5	112,98	0,0230	0,00685	0,0000	0,3865
Acrylonitrile	107-13-1	53,06	0,0360	0,00503	0,0000	0,2841
Benzene	71-43-2	78,11	0,9720	0,20007	0,0013	11,2931
Carbon Disulfide	75-15-0	76,13	0,3200	0,06420	0,0004	3,6237
Carbon Tetrachloride	56-23-5	153,84	0,0070	0,00284	0,0000	0,1602
Carbonyl Sulfide	75-15-0	76,13	0,1830	0,03671	0,0002	2,0723
Chlorobenzene	108-90-7	112,56	0,2270	0,06733	0,0004	3,8006
Chloroethane (Ethyl Chloride)	75-00-3	64,52	0,2390	0,04063	0,0003	2,2937
Chloroform	67-66-3	119,39	0,0210	0,00661	0,0000	0,3729
Dichloromethane (Methylene Chloride)	75-09-2	84,94	3,3950	0,75990	0,0049	42,8937
Ethylbenzene	100-41-4	106,16	6,7890	1,89921	0,0122	107,2034
Hexane	110-54-3	86,17	2,3240	0,52771	0,0034	29,7875
Mercury (Total)*	7439-97-6	200,61	0,0003	0,00015	0,0000	0,0087
Methyl Ethyl Ketone	78-93-3	72,11	10,5570	2,00605	0,0129	113,2342
Methyl Isobutyl Ketone	108-10-1	100,16	0,7500	0,19795	0,0013	11,1737
Perchloroethylene (Tetrachloroethylene)	127-18-4	165,83	1,1930	0,52133	0,0034	29,4270
Toluene	108-88-3	92,13	25,4050	6,16774	0,0397	348,1465
Trichloroethylene (Trichloroethene)	79-01-6	131,38	0,6810	0,23577	0,0015	13,3082
Vinyl Chloride	75-01-4	62,50	1,0770	0,17738	0,0011	10,0124
Xylenes	1330-20-7	106,16	16,5820	4,63877	0,0299	261,8422

Notes:

1.Average concentration of compounds found in LFG based on "Waste Industry Air Coalition Comparison of Recent Landfill Gas Analyses with Historic AP-42 Values." *Mercury concentration is based on the Revised EPA AP-42 Section 2.4 Table 2.41 (11/98).

2. Emission Conversion from ppmv to lb/MMscf example:
EF (lb/MMscf) = ppmv x lb/lbmol x 1 scf / 0.7302 scf-atm/lbmol-^{o}R/519.7 ^{o}R

WPWMA Landfill Toxic Emissions
Plan Concept 1: Fugitive LFG and Flares
Net Increase in 2050 from 2018 Baseline

Air Toxic Emissions From Flares								HARP2 Input			
								Small Flare Emissions		Large Flare Emissions	
Toxic Pollutant	CAS	Molecular Weight (lb/lbmol)	Conc. In LFG (ppmv) (1)	Uncontrolled EF (lb/MMscf LFG) (2)	Flare Control Efficiency (3)	Flare Hourly Toxic Emissions (lb/hr)	Flare Annual Toxic Emissions (lb/yr)	Small Flare Hourly Flare Emissions (lb/hr)	Small Flare Annual Flare Emissions (lb/yr)	Hourly Emissions for Large Flare (lb/hr)	Annual Emissions for Large Flare (lb/yr)
1,1,1-Trichloroethane (Methyl Chloroform)	71-55-6	133,42	0,1680	0,05907	98,0	1,51E-05	0,1326	2,02E-06	1,77E-02	1,31E-05	1,15E-01
1,1,2,2-Tetrachloroethane	79-34-5	167,85	0,0700	0,03096	98,0	7,93E-06	0,0695	1,06E-06	9,30E-03	6,87E-06	6,02E-02
1,1-Dichloroethane	75-34-3	98,96	0,7410	0,19323	98,0	4,95E-05	0,4337	6,62E-06	5,80E-02	4,29E-05	3,76E-01
1,1-Dichloroethene	75-35-4	96,94	0,0920	0,02350	98,0	6,02E-06	0,0527	8,06E-07	7,06E-03	5,22E-06	4,57E-02
1,2-Dichloroethane (Ethylene Dichloride)	107-06-2	98,96	0,1200	0,03129	98,0	8,02E-06	0,0702	1,07E-06	9,40E-03	6,95E-06	6,08E-02
1,2-Dichloropropane (Propylene Dichloride)	78-87-5	112,98	0,0230	0,00685	98,0	1,75E-06	0,0154	2,35E-07	2,06E-03	1,52E-06	1,33E-02
Acrylonitrile	107-13-1	53,06	0,0360	0,00503	99,7	1,93E-07	0,0017	2,59E-08	2,27E-04	1,68E-07	1,47E-03
Benzene	71-43-2	78,11	0,9720	0,20007	99,7	7,69E-06	0,0674	1,03E-06	9,01E-03	6,66E-06	5,83E-02
Carbon Disulfide	75-15-0	76,13	0,3200	0,06420	99,7	2,47E-06	0,0216	3,30E-07	2,89E-03	2,14E-06	1,87E-02
Carbon Tetrachloride	56-23-5	153,84	0,0070	0,00284	98,0	7,27E-07	0,0064	9,73E-08	8,52E-04	6,30E-07	5,52E-03
Carbonyl Sulfide	75-15-0	76,13	0,1830	0,03671	99,7	1,41E-06	0,0124	1,89E-07	1,65E-03	1,22E-06	1,07E-02
Chlorobenzene	108-90-7	112,56	0,2270	0,06733	98,0	1,73E-05	0,1511	2,31E-06	2,02E-02	1,49E-05	1,31E-01
Chloroethane (Ethyl Chloride)	75-00-3	64,52	0,2390	0,04063	98,0	1,04E-05	0,0912	1,39E-06	1,22E-02	9,02E-06	7,90E-02
Chloroform	67-66-3	119,39	0,0210	0,00661	98,0	1,69E-06	0,0148	2,26E-07	1,98E-03	1,47E-06	1,28E-02
Dichloromethane (Methylene Chloride)	75-09-2	84,94	3,3950	0,75990	98,0	1,95E-04	1,7056	2,60E-05	2,28E-01	1,69E-04	1,48E+00
Ethylbenzene	100-41-4	106,16	6,7890	1,89921	99,7	7,30E-05	0,6394	9,77E-06	8,55E-02	6,32E-05	5,54E-01
Hexane	110-54-3	86,17	2,3240	0,52771	99,7	2,03E-05	0,1777	2,71E-06	2,38E-02	1,76E-05	1,54E-01
Mercury (Total)*	7439-97-6	200,61	0,0003	0,00015	0,0	1,98E-06	0,0173	2,65E-07	2,32E-03	1,71E-06	1,50E-02
Methyl Ethyl Ketone	78-93-3	72,11	10,5570	2,00605	99,7	7,71E-05	0,6754	1,03E-05	9,04E-02	6,68E-05	5,85E-01
Methyl Isobutyl Ketone	108-10-1	100,16	0,7500	0,19795	99,7	7,61E-06	0,0666	1,02E-06	8,92E-03	6,59E-06	5,77E-02
Perchloroethylene (Tetrachloroethylene)	127-18-4	165,83	1,1930	0,52133	98,0	1,34E-04	1,1701	1,79E-05	1,57E-01	1,16E-04	1,01E+00
Toluene	108-88-3	92,13	25,4050	6,16774	99,7	2,37E-04	2,0766	3,17E-05	2,78E-01	2,05E-04	1,80E+00
Trichloroethylene (Trichloroethene)	79-01-6	131,38	0,6810	0,23577	98,0	6,04E-05	0,5292	8,08E-06	7,08E-02	5,23E-05	4,58E-01
Vinyl Chloride	75-01-4	62,50	1,0770	0,17738	98,0	4,54E-05	0,3981	6,08E-06	5,33E-02	3,94E-05	3,45E-01
Xylenes	1330-20-7	106,16	16,5820	4,63877	99,7	1,78E-04	1,5618	2,39E-05	2,09E-01	1,54E-04	1,35E+00
Hydrochloric Acid (HCl)**	7647-01-0	36,46	74,0000	7,10974	0,0	9,11E-02	797,9025	1,22E-02	1,07E+02	7,89E-02	6,91E+02

Notes:

1.Average concentration of compounds found in LFG based on "Waste Industry Air Coalition Comparison of Recent Landfill Gas Analyses with Historic AP-42 Values." *Mercury concentration is based on the Revised EPA AP-42 Section 2.4 Table 2.41 (11/98). **HCl default value based on chlorinated compounds in LFG, forming HCl when combusted in control equipment, default 0f 74 ppmv for landfills with majority of waste after 1992.

2. Emission Conversion from ppmv to lb/MMscf example:

EF (lb/MMscf) = ppmv x lb/lbmol x 1 scf / 0.7302 scf-atm/lbmol-^{o}R/519.7 ^{o}R

3. Typical control efficiency for flares, as found in AP-42, Table 2.4-3.

WPWMA Landfill Toxic Emissions
Plan Concept 2: Fugitive LFG and Flares
Net Increase in 2050 from 2018 Baseline

LFG Parameters

Parameter	Units	
Number of Flares	n/a	2
LFG Heat Content	Btu/scf	500
Methane Content LFG by Vol	%	50%
CO_2 Content LFG by Vol	%	42%
Hours of Operation	hours/day	24
Days of Operation	days/yr	365
Max. Hourly Fugitive LFG	MMscf/hr	0,006
Max. Daily Fugitive LFG	MMscf/day	0,15
Max. Yearly Fugitive LFG	MMscf/yr	53
LFG Collection Efficiency		80%
Max. Yearly Flared LFG	MMscf/yr	99
Max. Hourly Flared LFG	MMscf/hr	0,01
Flare Control, Eff	n/a	0.98 - 0.997
Flare Heat Input	MMBtu/yr	49 705
Flare Heat Input	MMBtu/hr	5,7

Source ID:	Small Flare at LFGTE		New Flare Zone A and B	
Fuel Type:	LFG		LFG	
Rating LFG Throughput:	27 800	scf/hr	180 000	scf/hr
Heat Rating [1]:	13,9	MMBtu/hr	90,0	MMBtu/hr
Ratio of LFG:	0,134		0,866	

Table XX. Air Toxic Emissions From Fugitive Landfill Gas

Toxic Pollutant	CAS	Molecular Weight (lb/lbmol)	Conc. In LFG (ppmv) (1)	Uncontrolled EF (lb/MMscf LFG) (2)	Total Fugitive LFG TAC Emissions	
					Fugitive LFG Hourly Toxic Emissions (lb/hr)	Fugitive LFG Annual Toxic Emissions (lb/yr)
1,1,1-Trichloroethane (methyl chloroform)	71-55-6	133,42	0,1680	0,05907	0,0004	3,1448
1,1,2,2-Tetrachloroethane	79-34-5	167,85	0,0700	0,03096	0,0002	1,6485
1,1-Dichloroethane	75-34-3	98,96	0,7410	0,19323	0,0012	10,2882
1,1-Dichloroethene	75-35-4	96,94	0,0920	0,02350	0,0001	1,2513
1,2-Dichloroethane (Ethylene Dichloride)	107-06-2	98,96	0,1200	0,03129	0,0002	1,6661
1,2-Dichloropropane	78-87-5	112,98	0,0230	0,00685	0,0000	0,3646
Acrylonitrile	107-13-1	53,06	0,0360	0,00503	0,0000	0,2680
Benzene	71-43-2	78,11	0,9720	0,20007	0,0012	10,6521
Carbon Disulfide	75-15-0	76,13	0,3200	0,06420	0,0004	3,4180
Carbon Tetrachloride	56-23-5	153,84	0,0070	0,00284	0,0000	0,1511
Carbonyl Sulfide	75-15-0	76,13	0,1830	0,03671	0,0002	1,9547
Chlorobenzene	108-90-7	112,56	0,2270	0,06733	0,0004	3,5849
Chloroethane (Ethyl Chloride)	75-00-3	64,52	0,2390	0,04063	0,0002	2,1635
Chloroform	67-66-3	119,39	0,0210	0,00661	0,0000	0,3518
Dichloromethane (Methylene Chloride)	75-09-2	84,94	3,3950	0,75990	0,0046	40,4590
Ethylbenzene	100-41-4	106,16	6,7890	1,89921	0,0115	101,1182
Hexane	110-54-3	86,17	2,3240	0,52771	0,0032	28,0967
Mercury (Total)*	7439-97-6	200,61	0,0003	0,00015	0,0000	0,0082
Methyl Ethyl Ketone	78-93-3	72,11	10,5570	2,00605	0,0122	106,8068
Methyl Isobutyl Ketone	108-10-1	100,16	0,7500	0,19795	0,0012	10,5395
Perchloroethylene (Tetrachloroethylene)	127-18-4	165,83	1,1930	0,52133	0,0032	27,7566
Toluene	108-88-3	92,13	25,4050	6,16774	0,0375	328,3848
Trichloroethylene (Trichloroethene)	79-01-6	131,38	0,6810	0,23577	0,0014	12,5528
Vinyl Chloride	75-01-4	62,50	1,0770	0,17738	0,0011	9,4441
Xylenes	1330-20-7	106,16	16,5820	4,63877	0,0282	246,9793

Notes:

1.Average concentration of compounds found in LFG based on "Waste Industry Air Coalition Comparison of Recent Landfill Gas Analyses with Historic AP-42 Values." *Mercury concentration is based on the Revised EPA AP-42 Section 2.4 Table 2.41 (11/98). **HCl default value based on chlorinated compounds in LFG, forming HCl, default 0f 74 ppmv for landfills with majority of waste after 1992.

2. Emission Conversion from ppmv to lb/MMscf example:
EF (lb/MMscf) = ppmv x lb/lbmol x 1 scf / 0.7302 scf-atm/lbmol-^{o}R/519.7 ^{o}R

WPWMA Landfill Toxic Emissions
Plan Concept 2: Fugitive LFG and Flares
Net Increase in 2050 from 2018 Baseline

Table XX. Air Toxic Emissions From Flares								HARP2 Input			
								Small Flare Emissions		Large Flare Emissions	
Toxic Pollutant	CAS	Molecular Weight (lb/lbmol)	Conc. In LFG (ppmv) (1)	Uncontrolled EF (lb/MMscf LFG) (2)	Flare Control Efficiency (3)	Flare Hourly Toxic Emissions (lb/hr)	Flare Annual Toxic Emissions (lb/yr)	Small Flare Hourly Flare Emissions (lb/hr)	Small Flare Annual Flare Emissions (lb/yr)	Hourly Emissions for Large Flare (lb/hr)	Annual Emissions for Large Flare (lb/yr)
1,1,1-Trichloroethane (Methyl Chloroform)	71-55-6	133,42	0,1680	0,05907	98,0	1,34E-05	0,1174	1,79E-06	1,57E-02	1,16E-05	1,02E-01
1,1,2,2-Tetrachloroethane	79-34-5	167,85	0,0700	0,03096	98,0	7,03E-06	0,0616	9,40E-07	8,24E-03	6,09E-06	5,33E-02
1,1-Dichloroethane	75-34-3	98,96	0,7410	0,19323	98,0	4,39E-05	0,3842	5,87E-06	5,14E-02	3,80E-05	3,33E-01
1,1-Dichloroethene	75-35-4	96,94	0,0920	0,02350	98,0	5,33E-06	0,0467	7,14E-07	6,25E-03	4,62E-06	4,05E-02
1,2-Dichloroethane (Ethylene Dichloride)	107-06-2	98,96	0,1200	0,03129	98,0	7,10E-06	0,0622	9,50E-07	8,32E-03	6,15E-06	5,39E-02
1,2-Dichloropropane (Propylene Dichloride)	78-87-5	112,98	0,0230	0,00685	98,0	1,55E-06	0,0136	2,08E-07	1,82E-03	1,35E-06	1,18E-02
Acrylonitrile	107-13-1	53,06	0,0360	0,00503	99,7	1,71E-07	0,0015	2,29E-08	2,01E-04	1,48E-07	1,30E-03
Benzene	71-43-2	78,11	0,9720	0,20007	99,7	6,81E-06	0,0597	9,11E-07	7,98E-03	5,90E-06	5,17E-02
Carbon Disulfide	75-15-0	76,13	0,3200	0,06420	99,7	2,19E-06	0,0191	2,92E-07	2,56E-03	1,89E-06	1,66E-02
Carbon Tetrachloride	56-23-5	153,84	0,0070	0,00284	98,0	6,44E-07	0,0056	8,62E-08	7,55E-04	5,58E-07	4,89E-03
Carbonyl Sulfide	75-15-0	76,13	0,1830	0,03671	99,7	1,25E-06	0,0109	1,67E-07	1,46E-03	1,08E-06	9,48E-03
Chlorobenzene	108-90-7	112,56	0,2270	0,06733	98,0	1,53E-05	0,1339	2,04E-06	1,79E-02	1,32E-05	1,16E-01
Chloroethane (Ethyl Chloride)	75-00-3	64,52	0,2390	0,04063	98,0	9,22E-06	0,0808	1,23E-06	1,08E-02	7,99E-06	7,00E-02
Chloroform	67-66-3	119,39	0,0210	0,00661	98,0	1,50E-06	0,0131	2,01E-07	1,76E-03	1,30E-06	1,14E-02
Dichloromethane (Methylene Chloride)	75-09-2	84,94	3,3950	0,75990	98,0	1,72E-04	1,5108	2,31E-05	2,02E-01	1,49E-04	1,31E+00
Ethylbenzene	100-41-4	106,16	6,7890	1,89921	99,7	6,47E-05	0,5664	8,65E-06	7,58E-02	5,60E-05	4,91E-01
Hexane	110-54-3	86,17	2,3240	0,52771	99,7	1,80E-05	0,1574	2,40E-06	2,11E-02	1,56E-05	1,36E-01
Mercury (Total)*	7439-97-6	200,61	0,0003	0,00015		1,75E-06	0,0153	2,34E-07	2,05E-03	1,52E-06	1,33E-02
Methyl Ethyl Ketone	78-93-3	72,11	10,5570	2,00605	99,7	6,83E-05	0,5983	9,14E-06	8,00E-02	5,92E-05	5,18E-01
Methyl Isobutyl Ketone	108-10-1	100,16	0,7500	0,19795	99,7	6,74E-06	0,0590	9,02E-07	7,90E-03	5,84E-06	5,11E-02
Perchloroethylene (Tetrachloroethylene)	127-18-4	165,83	1,1930	0,52133	98,0	1,18E-04	1,0365	1,58E-05	1,39E-01	1,02E-04	8,98E-01
Toluene	108-88-3	92,13	25,4050	6,16774	99,7	2,10E-04	1,8394	2,81E-05	2,46E-01	1,82E-04	1,59E+00
Trichloroethylene (Trichloroethene)	79-01-6	131,38	0,6810	0,23577	98,0	5,35E-05	0,4688	7,16E-06	6,27E-02	4,64E-05	4,06E-01
Vinyl Chloride	75-01-4	62,50	1,0770	0,17738	98,0	4,03E-05	0,3527	5,39E-06	4,72E-02	3,49E-05	3,05E-01
Xylenes	1330-20-7	106,16	16,5820	4,63877	99,7	1,58E-04	1,3834	2,11E-05	1,85E-01	1,37E-04	1,20E+00
Hydrochloric Acid (HCl)**	7647-01-0	36,46	74,0000	7,10974		8,07E-02	706,7829	1,08E-02	9,46E+01	6,99E-02	6,12E+02

Notes:

1.Average concentration of compounds found in LFG based on "Waste Industry Air Coalition Comparison of Recent Landfill Gas Analyses with Historic AP-42 Values." *Mercury concentration is based on the Revised EPA AP-42 Section 2.4 Table 2.41 (11/98). **HCl default value based on chlorinated compounds in LFG, forming HCl, default 0f 74 ppmv for landfills with majority of waste after 1992.

2. Emission Conversion from ppmv to lb/MMscf example:

EF (lb/MMscf) = ppmv x lb/lbmol x 1 scf / 0.7302 scf-atm/lbmol-^{o}R/519.7 ^{o}R

3. Typical control efficiency for flares, as found in AP-42, Table 2.4-3.

Traffic Flow and Vehicle Quantities

Routes correspond with PDF maps located at \\sacfpp01\Proj\WPWMA\683386P2\EIR\06-AirQuality\Data\Traffic_Routes; Source names correspond with HRA Modeling Setup workbook (WPWMA_Setup.xlsx)

Vehicle counts and fleet mix from \\sacfpp01\Proj\WPWMA\683386P2\Material_Flow_Chart

2018 Traffic

Traffic Type	Route Start	Route End	Source Name	Road Length, One Way (meters)	Road Length, One Way (miles)	Percent Paved Road (%)	Paved Road Length, (meters)	Unpaved Road Length (meters)	Annual Vehicle Qty	*LDA*	*LDT1 and LDT2*	*LHD1*	*LHD2*	*MDV*	*MHD small*	*MHD large*	*HHD*	*Vehicle Qty Check*	Notes
Inbound Customers	Direct	MRF		475	0,295	100%	475	-	35 755	-	427	1 016	3 414	656	1 680	26 430	2 132		WPWMA data combines MRF and C&D vehicles to Landfill. Ratio of vehicles based on tonnage allocation between MRF and C&D
Internal Ops	MRF	Landfill		1490	0,926	80%	1 192	298	21 719	-	-	-	3	3	15	12 921	8 777		WPWMA data combines MRF and C&D vehicles to Inert. Assume all vehicles follow MRF to Inert route since Flow Chart does not specify C&D to Inert stream and traffic route is similar.
Internal Ops	MRF	Inert		955	0,593	90%	860	96	461	-	-	-	-	-	-	461	-		WPWMA data combines MRF and C&D Outbound Recyclables. Ratio of vehicles based on tonnage allocation between MRF and C&D
Outbound Recyclables	MRF	Market/Reuse		545	0,339	100%	545	-	2 879	-	1	-	10	15	23	822	2 009		
Inbound Customers	Direct	Compost		735	0,457	100%	735	-	12 206	-	35	566	2 919	164	1 800	6 399	323		
Internal Ops	Compost	Landfill				80%	-	-	negligible										Assumed to be negligible for analysis.
Outbound Recyclables	Compost	Market/Reuse		490	0,304	100%	490	-	2 703	-							2 703		Per WPWMA, compost leaves site in large tractor trailers - assume this is equivalent to HHD vehicle class.
Inbound Customers	Direct	C&D		660	0,410	100%	660	-	25 759	-	594	1 913	9 451	529	8 919	3 840	513		
Internal Ops	C&D	Landfill		1150	0,715	80%	920	230	3 446	-	-	-	0	1	2	2 050	1 393		WPWMA data combines MRF and C&D vehicles to Landfill. Ratio of vehicles based on tonnage allocation between MRF and C&D
Outbound Recyclables	C&D	Market/Reuse		660	0,410	100%	660	-	1 850	-	1	-	7	9	14	528	1 290		WPWMA data combines MRF and C&D Outbound Recyclables. Ratio of vehicles based on tonnage allocation between MRF
Inbound Customers	Direct	Inert		1045	0,649	100%	1 045	-	15 149	-	9 859	21	343	6	3 046	1 779	95		
Internal Ops	Inert	Landfill				80%	-	-	negligible										Assumed to be negligible for analysis.
Outbound Recyclables	Inert	Market/Reuse		1045	0,649	100%	1 045	-	negligible										Assumed to be negligible for analysis.
Inbound Customers	Direct	HHW - Weekday		310	0,193	100%	310	-	10 611	-	9 533	10	37	7	26	999	-		WPWMA data combines HHW and Buyback vehicles. Ratio of vehicles based on vehicle allocation for HHW weekday and total HHW/Buyback vehicles.
Inbound Customers	Direct	HHW - Weekend		440	0,273	100%	440	-	7 243	-	6 507	7	25	5	18	682	-		WPWMA data combines HHW and Buyback vehicles. Ratio of vehicles based on vehicle allocation for HHW weekend and total HHW/Buyback vehicles.
Internal Ops	HHW	MRF				100%	-	-	negligible										Assumed to be negligible for analysis.
Outbound Recyclables	HHW	Contractor				100%	-	-	negligible										Assumed to be negligible for analysis.
Inbound Customers	Direct	Public - Self Haul to Public		420	0,261	100%	420	-	108 430	-	108 430	-	-	-	-	-	-		
Inbound Customers	Direct	Public - Self Haul to Compost		440	0,273	100%	440	-	27 745	-	27 745	-	-	-	-	-	-		
Internal Ops	Public	MRF		795	0,494	100%	795	-	1 290	-	-	-	1	-	12	824	452		WPWMA data combines Public vehicles to MRF or C&D. Ratio of vehicles based on tonnage allocation between MRF and C&D
Internal Ops	Public	C&D		945	0,587	90%	851	95	1 360	-	-	-	2	-	13	869	477		WPWMA data combines Public vehicles to MRF or C&D. Ratio of vehicles based on tonnage allocation between MRF and C&D
Internal Ops	Public	Landfill		1320	0,820	80%	1 056	264	866	-	-	-	-	-	-	866	-		
Inbound Customers	Direct	Buyback - Public		325	0,202	100%	325	-	27 473	-	24 680	25	96	17	68	2 585	-		WPWMA data combines HHW and Buyback vehicles. Ratio of vehicles based on vehicle allocation for Buyback public and total HHW/Buyback vehicles.
Inbound Customers	Direct	Buyback - Commercial		550	0,342	100%	550	-	5 126	-	4 605	5	18	3	13	482	-		WPWMA data combines HHW and Buyback vehicles. Ratio of vehicles based on vehicle allocation for Buyback commercial and total HHW/Buyback vehicles.
Internal Ops	Buyback	MRF				100%	-	-	negligible										Assumed to be negligible for analysis.
Outbound Recyclables	Buyback	Market/Reuse				100%	-	-	negligible										Assumed to be negligible for analysis.
Inbound Customers	Direct	Landfill		1040	0,646	80%	832	208	17 055	-	368	284	1 872	226	3 756	9 949	600		

2050 Traffic - Plan Concept 1

Traffic Type	Route Start	Route End	Source Name	Road Length, One Way (meters)	Road Length, One Way (miles)	Percent Paved Road (%)	Paved Road Length (meters)	Unpaved Road Length (meters)	Annual Vehicle Qty	*LDA*	*LDT1 and LDT2*	*LHD1*	*LHD2*	*MDV*	*MHD small*	*MHD large*	*HHD*	*Vehicle Qty Check*	Notes
Inbound Customers	Direct	MRF	MRF Inbound Customers	466	0,290	100%	466	-	61 790	-	738	1 756	5 900	1 134	2 903	45 675	3 684		
Internal Ops	MRF	Landfill	MRF to Landfill Internal Ops Vehicles	3 342	2,077	80%	2 674	668	36 389	-	-	-	4	6	25	21 648	14 706		
Internal Ops	MRF	Inert	MRF to Inert Internal Ops Vehicles	838	0,520	90%	754	84	869	-	-	-	-	-	-	869	-		
Internal Ops	MRF	Compost	MRF to Compost Internal Ops Vehciles after crossing is built	654	0,406	90%	589	65	985	-	-	-	-	-	-	985	-		Assumed to be same vehicle type as MRF Inert.
Outbound Recyclables	MRF	Market/Reuse	MRF Outbound Recyclabes	524	0,326	100%	524	-	5 426	-	2	-	20	28	42	1 549	3 785		
Inbound Customers	Direct	Compost	Compost Inbound Customers	770	0,479	100%	770	-	28 594	-	82	1 326	6 838	384	4 217	14 990	757		
Internal Ops	Compost	Landfill	Compost to landfill Internal Ops Vehicles	3 251	2,020	80%	2 601	650	negligible	-									Assumed to be negligible for analysis.
Outbound Recyclables	Compost	Market/Reuse	Outbound Material	770	0,479	100%	770	-	6 947	-	-	-	-	-	-	-	6 947		
Inbound Customers	Direct	C&D	CD Inert Inbound Customers	532	0,330	100%	532	-	61 856	-	1 426	4 594	22 695	1 270	21 418	9 221	1 232		
Internal Ops	C&D	Landfill	CD Inert to Landfill Internal Ops Vehicles	2 559	1,590	80%	2 047	512	7 113	-	-	-	1	1	5	4 232	2 875		
Outbound Recyclables	C&D	Market/Reuse	CD Inert Outbound Recylables	532	0,330	100%	532	-	negligible	-									Assumed to be negligible for analysis.
Inbound Customers	Direct	Inert	CD Inert Inbound Customers	532	0,330	100%	532	-	28 549	-	18 580	40	646	11	5 740	3 353	179		
Internal Ops	Inert	Landfill				80%	-	-	negligible	-									Assumed to be negligible for analysis.
Outbound Recyclables	Inert	Market/Reuse				100%	-	-	negligible	-									Assumed to be negligible for analysis.
Inbound Customers	Direct	HHW - Weekday	HHW Inbound Customers	1 185	0,736	100%	1 185	-	19 997	-	17 964	18	70	13	50	1 882	-		
Inbound Customers	Direct	HHW - Weekend	HHW Inbound Customers	1 185	0,736	100%	1 185	-	13 649	-	12 262	12	48	9	34	1 285	-		
Internal Ops	HHW	MRF				100%	-	-	negligible	-									Assumed to be negligible for analysis.
Outbound Recyclables	HHW	Contractor				100%	-	-	negligible	-									Assumed to be negligible for analysis.
Inbound Customers	Direct	Public - Self Haul to Public	Public Inbound Customers	1 185	0,736	100%	1 185	-	204 341	-	204 341	-	-	-	-	-	-		
Inbound Customers	Direct	Public - Self Haul to Compost	Public Self Haul Organics Only Inbound Customers	770	0,479	100%	770	-	52 287	-	52 287	-	-	-	-	-	-		
Internal Ops	Public	MRF	Public to MRF Internal Ops Vehicles After crossing is built	1 806	1,122	100%	1 806	-	2 432	-	-	-	3	-	23	1 554	853		
Internal Ops	Public	C&D	Public to CD Internal Ops Vehicles after crossing is built	1 081	0,672	90%	973	108	2 562	-	-	-	3	-	24	1 637	898		
Internal Ops	Public	Landfill	Public to Landfill Internal Ops Vehicles	3 553	2,208	80%	2 843	711	1 632	-	-	-	-	-	-	1 632	-		
Inbound Customers	Direct	Buyback - Public	Buyback Inbound Customers	1 185	0,736	100%	1 185	-	51 774	-	46 511	47	181	33	129	4 872	-		
Inbound Customers	Direct	Buyback - Commercial	Buyback Inbound Customers (Commercial)	524	0,326	100%	524	-	9 660	-	8 678	9	34	6	24	909	-		
Internal Ops	Buyback	MRF				100%	-	-	negligible	-									Assumed to be negligible for analysis.
Outbound Recyclables	Buyback	Market/Reuse				100%	-	-	negligible	-									Assumed to be negligible for analysis.
Inbound Customers	Direct	Landfill	Landfill Inbound Customers	2 526	1,569	80%	2 021	505	18 829	-	406	314	2 067	250	4 147	10 984	662		
Employees/Vendors	Direct	Compatible Manufacturing	Compatible Mfg Employees/Vendors	1 387	0,862	100%	1 387	-	2 249 520	574 320	1 123 340	29 570	101 620	9 680	118 760	265 280	26 950		

2050 Traffic - Plan Concept 2

Traffic Type	Route Start	Route End	Source Name	Road Length, One Way (meters)	Road Length, One Way (miles)	Percent Paved Road (%)	Paved Road Length (meters)	Unpaved Road Length (meters)	Annual Vehicle Qty	*LDA*	*LDT1 and LDT2*	*LHD1*	*LHD2*	*MDV*	*MHD small*	*MHD large*	*HHD*	*Vehicle Qty Check*	Notes
Inbound Customers	Direct	MRF	MRF Inbound Customers	814	0,506	100%	814	-	61 790	-	738	1 756	5 900	1 134	2 903	45 675	3 684		
Internal Ops	MRF	Landfill	MRF to Landfill Interal Ops Vehicles	1 330	0,827	80%	1 064	266	36 389	-	-	-	4	6	25	21 648	14 706		
Internal Ops	MRF	Inert	MRF to C&D/Inert Internal Ops Vehicles	792	0,492	90%	713	79	869	-	-	-	-	-	-	869	-		
Internal Ops	MRF	Compost	MRF to Compost Internal Ops Vehicles	1 099	0,683	90%	989	110	985	-	-	-	-	-	-	985	-		Assumed to be same vehicle type as MRF Inert.
Outbound Recyclables	MRF	Market/Reuse	MRF Outbound Recyclables	905	0,562	100%	905	-	5 426	-	2	-	20	28	42	1 549	3 785		
Inbound Customers	Direct	Compost	Compost Inbound Customers	754	0,469	100%	754	-	28 594	-	82	1 326	6 838	384	4 217	14 990	757		
Internal Ops	Compost	Landfill	Compost to Landfill Internal Ops Vehicles	1 459	0,907	80%	1 167	292	negligible	-									Assumed to be negligible for analysis.
Outbound Recyclables	Compost	Market/Reuse	Compost Outbound Material	816	0,507	100%	816	-	6 947	-	-	-	-	-	-	-	6 947		
Inbound Customers	Direct	C&D	C&D/Inert Inbound Customers	595	0,370	100%	595	-	61 856	-	1 426	4 594	22 695	1 270	21 418	9 221	1 232		
Internal Ops	C&D	Landfill	C&D/Inert to Landfill Internal Ops Vehicles	1 715	1,066	80%	1 372	343	7 113	-	-	-	1	1	5	4 232	2 875		
Outbound Recyclables	C&D	Market/Reuse				100%	-	-	negligible	-									Assumed to be negligible for analysis.
Inbound Customers	Direct	Inert	C&D/Inert Inbound Customers	595	0,370	100%	595	-	28 549	-	18 580	40	646	11	5 740	3 353	179		
Internal Ops	Inert	Landfill	C&D/Inert to Landfill Internal Ops Vehicles	1 715	1,066	80%	1 372	343	negligible	-									Assumed to be negligible for analysis.
Outbound Recyclables	Inert	Market/Reuse				100%	-	-	negligible	-									Assumed to be negligible for analysis.
Inbound Customers	Direct	HHW - Weekday	HHW Inbound Customers	912	0,567	100%	912	-	19 997	-	17 964	18	70	13	50	1 882	-		
Inbound Customers	Direct	HHW - Weekend	HHW Inbound Customers	912	0,567	100%	912	-	13 649	-	12 262	12	48	9	34	1 285	-		
Internal Ops	HHW	MRF				100%	-	-	negligible	-									Assumed to be negligible for analysis.
Outbound Recyclables	HHW	Contractor				100%	-	-	negligible	-									Assumed to be negligible for analysis.
Inbound Customers	Direct	Public - Self Haul to Public	Public (self haul non-organics) Inbound Customers	912	0,567	100%	912	-	204 341	-	204 341	-	-	-	-	-	-		
Inbound Customers	Direct	Public - Self Haul to Compost	Public (self haul organics) Inbound Customers	816	0,507	100%	816	-	52 287	-	52 287	-	-	-	-	-	-		
Internal Ops	Public	MRF	Public to MRF Internal Ops Vehicles	697	0,433	100%	697	-	2 432	-	-	-	3	-	23	1 554	853		
Internal Ops	Public	C&D	Public to C&D/Inert Internal Ops Vehicles	388	0,241	90%	349	39	2 562	-	-	-	3	-	24	1 637	898		
Internal Ops	Public	Landfill	Public to Landfill Internal Ops Vehicles	1 459	0,907	80%	1 167	292	1 632	-	-	-	-	-	-	1 632	-		
Inbound Customers	Direct	Buyback - Public	Buyback (public) Inbound Customers	912	0,567	100%	912	-	51 774	-	46 511	47	181	33	129	4 872	-		
Inbound Customers	Direct	Buyback - Commercial	Buyback (commercial) Inbound Customers	905	0,562	100%	905	-	9 660	-	8 678	9	34	6	24	909	-		
Internal Ops	Buyback	MRF				100%	-	-	negligible	-									Assumed to be negligible for analysis.
Outbound Recyclables	Buyback	Market/Reuse				100%	-	-	negligible	-									Assumed to be negligible for analysis.
Inbound Customers	Direct	Landfill	Landfill Inbound Customers	842	0,523	80%	674	168	18 829	-	406	314	2 067	250	4 147	10 984	662		
Employees/Vendors	Direct	Compatible Manufacturing	Compatible Manufacturing Employees/Vendors	744	0,462	100%	744	-	2 249 520	574 320	1 123 340	29 570	101 620	9 680	118 760	265 280	26 950		

Traffic Flow and Vehicle Quantities

Routes correspond with PDF maps located at \\sacfpp01\Proj\WPWMA\683386P2\EIR\06-AirQuality\Data\Traffic_Routes; Source names correspond with HRA Modeling Setup workbook (WPWMA_Setup.xlsx)

Vehicle counts and fleet mix from \\sacfpp01\Proj\WPWMA\683386P2\Material_Flow_Chart

2018 Traffic

Traffic Type	Route Start	Route End	Source Name	Road Length, One Way (meters)	Road Length, One Way (miles)	Percent Paved Road (%)	Paved Road Length, (meters)	Unpaved Road Length (meters)	Annual Vehicle Qty	LDA	LDT1 and LDT2	LHD1	LHD2	MDV	MHD small	MHD large	HHD
														Annual VMT (mi/yr)			
Inbound Customers	Direct	MRF		475	0,295152	100%	475	-	35 755	-	252	600	2 015	387	992	15 602	1 259
Internal Ops	MRF	Landfill		1490	0,9258454	80%	1 192	298	21 719	-	-	-	5	6	27	23 925	16 253
Internal Ops	MRF	Inert		955	0,593411	90%	860	96	461	-	-	-	-	-	-	547	-
Outbound Recyclables	MRF	Market/Reuse		545	0,3386481	100%	545	-	2 879	-	1	-	7	10	15	557	1 360
Inbound Customers	Direct	Compost		735	0,456709	100%	735	-	12 206	-	32	517	2 666	150	1 644	5 845	295
Internal Ops	Compost	Landfill				80%	-	-	negligible		-	-	-	-	-	-	-
Outbound Recyclables	Compost	Market/Reuse		490	0,3044726	100%	490	-	1 646	-	-	-	-	-	-	-	1 646
Inbound Customers	Direct	C&D		660	0,410106	100%	660	-	25 759	-	487	1 569	7 752	434	7 315	3 150	421
Internal Ops	C&D	Landfill		1150	0,7145786	80%	920	230	3 446	-	-	-	1	1	3	2 930	1 990
Outbound Recyclables	C&D	Market/Reuse		660	0,410106	100%	660	-	1 850	-	1	-	5	8	12	433	1 058
Inbound Customers	Direct	Inert		1045	0,6493345	100%	1 045	-	15 149	-	12 804	27	445	8	3 956	2 310	123
Internal Ops	Inert	Landfill				80%	-	-	negligible		-	-	-	-	-	-	-
Outbound Recyclables	Inert	Market/Reuse		1045	0,6493345	100%	1 045	-	negligible		-	-	-	-	-	-	-
Inbound Customers	Direct	HHW - Weekday		310	0,1926255	100%	310	-	10 611	-	3 672	4	14	3	10	385	-
Inbound Customers	Direct	HHW - Weekend		440	0,273404	100%	440	-	7 243	-	3 558	4	14	3	10	373	-
Internal Ops	HHW	MRF				100%	-	-	negligible		-	-	-	-	-	-	-
Outbound Recyclables	HHW	Contractor				100%	-	-	negligible		-	-	-	-	-	-	-
Inbound Customers	Direct	Public - Self Haul to Public		420	0,2609765	100%	420	-	108 430	-	56 595	-	-	-	-	-	-
Inbound Customers	Direct	Public - Self Haul to Compost		440	0,273404	100%	440	-	27 745	-	15 171	-	-	-	-	-	-
Internal Ops	Public	MRF		795	0,4939913	100%	795	-	1 290	-	-	-	1	-	12	814	447
Internal Ops	Public	C&D		945	0,5871972	90%	851	95	1 360	-	-	-	2	-	15	1 020	560
Internal Ops	Public	Landfill		1320	0,820212	80%	1 056	264	866	-	-	-	-	-	-	1 421	-
Inbound Customers	Direct	Buyback - Public		325	0,2019461	100%	325	-	27 473	-	9 968	10	39	7	28	1 044	-
Inbound Customers	Direct	Buyback - Commercial		550	0,341755	100%	550	-	5 126	-	3 148	3	12	2	9	330	-
Internal Ops	Buyback	MRF				100%	-	-	negligible		-	-	-	-	-	-	-
Outbound Recyclables	Buyback	Market/Reuse				100%	-	-	negligible		-	-	-	-	-	-	-
Inbound Customers	Direct	Landfill		1040	0,6462276	80%	832	208	17 055	-	476	367	2 419	292	4 854	12 859	775

2050 Traffic - Plan Concept 1

Traffic Type	Route Start	Route End	Source Name	Road Length, One Way (meters)	Road Length, One Way (miles)	Percent Paved Road (%)	Paved Road Length (meters)	Paved Road Length (mi)	Unpaved Road Length (meters)	Unpaved Road Length (mi)	Annual Vehicle Qty	Daily Peaking Factor	LDA	LDT1 and LDT2	LHD1	LHD2	MDV	MHD small	MHD large	HHD
Inbound Customers	Direct	MRF	MRF Inbound Customers	466	0,289502	100%	466	0,29	-	-	61 790	1,28265	-	175	417	1 401	269	689	10 844	875
Internal Ops	MRF	Landfill	MRF to Landfill Internal Ops Vehicles	3 342	2,076775	80%	2 674	1,66	668	0,42	36 389	1,28265	-	-	-	13	18	75	65 991	44 828
Internal Ops	MRF	Inert	MRF to Inert Internal Ops Vehicles	838	0,520412	90%	754	0,47	84	0,05	869	1,28265	-	-	-	-	-	-	357	-
Internal Ops	MRF	Compost	MRF to Compost Internal Ops Vehciles after crossing is built	654	0,406365	90%	589	0,37	65	0,04	985	1,28265	-	-	-	-	-	-	801	-
Outbound Recyclables	MRF	Market/Reuse	MRF Outbound Recyclabes	524	0,325899	100%	524	0,33	-	-	5 426	1,28265	-	1	-	6	8	12	453	1 107
Inbound Customers	Direct	Compost	Compost Inbound Customers	770	0,478658	100%	770	0,48	-	-	28 594	1,28265	-	47	752	3 880	218	2 393	8 506	429
Internal Ops	Compost	Landfill	Compost to landfill Internal Ops	3 251	2,020112	80%	2 601	1,62	650	0,40	negligible	1,28265	-							
Outbound Recyclables	Compost	Market/Reuse	Outbound Material	770	0,478658	100%	770	0,48	-	-	6 947	1,28265	-	-	-	-	-	-	-	5 004
Inbound Customers	Direct	C&D	CD Inert Inbound Customers	532	0,330320	100%	532	0,33	-	-	61 856	1,28265	-	455	1 466	7 241	405	6 834	2 942	393
Internal Ops	C&D	Landfill	CD Inert to Landfill Internal Ops Vehicles	2 559	1,590255	80%	2 047	1,27	512	0,32	7 113	1,28265	-	-	-	2	3	12	10 529	7 153
Outbound Recyclables	C&D	Market/Reuse	CD Inert Outbound Recylables	532	0,330320	100%	532	0,33	-	-	negligible	1,28265	-							
Inbound Customers	Direct	Inert	CD Inert Inbound Customers	532	0,330320	100%	532	0,33	-	-	28 549	1,28265	-	(529)	(1)	(18)	(0)	(163)	(95)	(5)
Internal Ops	Inert	Landfill				80%	-	-	-	-	negligible	1,28265	-							
Outbound Recyclables	Inert	Market/Reuse				100%	-	-	-	-	negligible	1,28265	-							
Inbound Customers	Direct	HHW - Weekday	HHW Inbound Customers	1 185	0,736041	100%	1 185	0,74	-	-	19 997	1,28265	-	22 773	23	89	16	63	2 386	-
Inbound Customers	Direct	HHW - Weekend	HHW Inbound Customers	1 185	0,736041	100%	1 185	0,74	-	-	13 649	1,28265	-	14 493	15	57	10	40	1 518	-
Internal Ops	HHW	MRF				100%	-	-	-	-	negligible	1,28265	-							
Outbound Recyclables	HHW	Contractor				100%	-	-	-	-	negligible	1,28265	-							
Inbound Customers	Direct	Public - Self Haul to Public	Public Inbound Customers	1 185	0,736041	100%	1 185	0,74	-	-	204 341	1,28265	-	244 211	-	-	-	-	-	-
Inbound Customers	Direct	Public - Self Haul to Compost	Public Self Haul Organics Only Inbound Customers	770	0,478658	100%	770	0,48	-	-	52 287	1,28265	-	34 884	-	-	-	-	-	-
Internal Ops	Public	MRF	Public to MRF Internal Ops Vehicles After crossing is built	1 806	1,121928	100%	1 806	1,12	-	-	2 432	1,28265	-	-	-	5	-	39	2 672	1 466
Internal Ops	Public	C&D	Public to CD Internal Ops Vehicles after crossing is built	1 081	0,671720	90%	973	0,60	108	0,07	2 562	1,28265	-	-	-	2	-	17	1 179	647
Internal Ops	Public	Landfill	Public to Landfill Internal Ops Vehicles	3 553	2,208023	80%	2 843	1,77	711	0,44	1 632	1,28265	-	-	-	-	-	-	5 786	-
Inbound Customers	Direct	Buyback - Public	Buyback Inbound Customers	1 185	0,736041	100%	1 185	0,74	-	-	51 774	1,28265	-	58 500	59	228	41	162	6 128	-
Inbound Customers	Direct	Buyback - Commercial	Buyback Inbound Customers (Commercial)	524	0,325899	100%	524	0,33	-	-	9 660	1,28265	-	2 509	3	10	2	7	263	-
Internal Ops	Buyback	MRF				100%	-	-	-	-	negligible	1,28265	-	-	-	-	-	-	-	-
Outbound Recyclables	Buyback	Market/Reuse				100%	-	-	-	-	negligible	1,28265	-	-	-	-	-	-	-	-
Inbound Customers	Direct	Landfill	Landfill Inbound Customers	2 526	1,569427	80%	2 021	1,26	505	0,31	18 829	1,28265	-	800	617	4 068	491	8 161	21 618	1 304
Employees					10,8			-		-		1,28265				1 080				
Offsite Vehicles		65 Foothills	Comes off of 65 to Foothills		9,60			-		-		1,28265		1 075 333	26 927	128 058	9 437	121 948	252 451	17 984
Offsite Vehicles	Industrial	Athens	Comes off of Industrial to Athens		0,55			-		-		1,28265		8 346	209	994	73	946	1 959	140
Offsite Vehicles	Northbound	Fiddyment	Northbound Fiddyment		1,57			-		-		1,28265		45 237	1 133	5 387	397	5 130	10 620	757
Offsite Vehicles	Southbound	Fiddyment	Southbound Fiddyment		0,52			-		-		1,28265		7 536	189	897	66	855	1 769	126
Offsite Recycle Vehicles	Industrial	Athens	Comes off of Industrial to Athens		5,21			-		-		1,28265		1	-	7	9	14	518	12 321
Offsite Recycle Vehicles		65 Foothills	Comes off of 65 to Foothills		95,58			-		-		1,28265		14,09	-	119,78	169,10	260,70	9 511,85	226 041,46

Traffic Type	Daily Vehicle Exhaust Emissions VOC	CO	NOx	SO2	PM10	PM10	PM2.5	Annual Vehicle Exhaust Emissions CO2	CH4	N2O	CO2e	DPM	Paved Road Fugitive Dust PM10	PM2.5	Unpaved Road Fugitive Dust PM10	PM2.5
			(lb/day)					(lb/yr)						lb/yr		
Inbound Customers	0,01	0,05	0,38	0,00	0,01	2,43	0,18	36 096,32	0,08	5,65	1,92	0,19	2 462,09	604,33	-	-
Internal Ops	0,02	0,36	4,23	0,01	0,09	24,24	1,17	339 273,73	0,32	53,33	7,78	1,22	14 893,00	3 655,56	8 112,48	811,25
Internal Ops	0,00	0,00	0,01	0,00	0,00	0,05	0,00	932,45	0,00	0,15	0,02	0,00	53,94	13,24	13,06	1,31
Internal Ops	0,00	0,00	0,02	0,00	0,00	0,11	0,01	2 090,26	0,00	0,33	0,04	0,01	120,92	29,68	29,27	2,93
Outbound Recyclables	0,00	0,01	0,07	0,00	0,00	0,44	0,02	5 347,92	0,01	0,84	0,14	0,02	266,28	65,36	-	-
Inbound Customers	0,01	0,07	0,35	0,00	0,01	2,95	0,30	36 287,46	0,16	5,70	3,81	0,31	2 722,88	668,34	-	-
Internal Ops	-	-	-	-	-	-	-	-	-	-	-	-	-	-	-	-
Outbound Recyclables	0,00	0,03	0,26	0,00	0,01	1,66	0,08	18 612,13	0,02	2,93	0,53	0,08	839,81	206,14	-	-
Inbound Customers	0,02	0,12	0,32	0,00	0,01	3,91	0,48	38 976,82	0,27	6,08	6,63	0,50	3 312,36	813,03	-	-
Internal Ops	0,00	0,06	0,68	0,00	0,01	3,87	0,19	54 134,45	0,05	8,51	1,24	0,19	2 376,32	583,28	1 294,43	129,44
Outbound Recyclables	-	-	-	-	-	-	-	-	-	-	-	-	-	-	-	-
Inbound Customers	(0,00)	(0,00)	(0,01)	(0,00)	(0,00)	(0,07)	(0,00)	(1 128,24)	(0,00)	(0,12)	(0,04)	(0,00)	(136,44)	(33,49)	-	-
Internal Ops	-	-	-	-	-	-	-	-	-	-	-	-	-	-	-	-
Outbound Recyclables	-	-	-	-	-	-	-	-	-	-	-	-	-	-	-	-
Inbound Customers	0,00	0,12	0,08	0,00	0,00	1,34	0,09	24 084,17	0,11	1,25	0,61	0,10	4 254,33	1 044,25	-	-
Inbound Customers	0,00	0,08	0,05	0,00	0,00	0,85	0,06	15 327,41	0,07	0,80	0,39	0,06	2 707,50	664,57	-	-
Internal Ops	-	-	-	-	-	-	-	-	-	-	-	-	-	-	-	-
Outbound Recyclables	-	-	-	-	-	-	-	-	-	-	-	-	-	-	-	-
Inbound Customers	0,01	1,21	0,05	0,01	0,04	10,35	0,72	187 995,40	1,10	2,37	4,48	0,78	40 985,26	10 060,02	-	-
Inbound Customers	0,00	0,17	0,01	0,00	0,01	1,48	0,10	26 853,66	0,16	0,34	0,64	0,11	5 854,42	1 436,99	-	-
Internal Ops	0,00	0,01	0,15	0,00	0,00	0,87	0,04	12 537,70	0,01	1,97	0,28	0,04	701,82	172,26	-	-
Internal Ops	0,00	0,01	0,07	0,00	0,00	0,38	0,02	5 532,99	0,01	0,87	0,12	0,02	278,75	68,42	67,48	6,75
Internal Ops	0,00	0,01	0,17	0,00	0,00	0,82	0,04	15 108,79	0,01	2,37	0,27	0,04	776,90	190,69	423,19	42,32
Inbound Customers	0,00	0,31	0,20	0,00	0,01	3,45	0,23	61 869,02	0,28	3,21	1,57	0,25	10 928,81	2 682,53	-	-
Inbound Customers	0,00	0,01	0,01	0,00	0,00	0,15	0,01	2 653,39	0,01	0,14	0,07	0,01	468,71	115,05	-	-
Internal Ops	-	-	-	-	-	-	-	-	-	-	-	-	-	-	-	-
Outbound Recyclables	-	-	-	-	-	-	-	-	-	-	-	-	-	-	-	-
Inbound Customers	0,01	0,12	0,94	0,00	0,02	5,98	0,46	89 781,76	0,20	14,02	4,84	0,48	4 975,56	1 221,27	2 710,27	271,03
Onsite Roads	**0,10**	**2,75**	**8,03**	**0,03**	**0,23**	**65,27**	**4,18**	**972 367,62**	**2,86**	**110,74**	**35,33**	**4,42**	**98 843,23**	**24 261,52**	**12 650,18**	**1 265,02**
Employees	0,00	0,01	0,00	0,00	0,00	0,30	0,06	1 425,08	0,03	0,22	0,76	0,06	0,71	0,18	-	-
Offsite Vehicles	0,44	7,86	12,28	0,07	0,52	146,85	13,29	2 081 485,87	10,08	207,51	148,13	14,03	1 078,94	264,83	-	-
Offsite Vehicles	0,00	0,06	0,10	0,00	0,00	1,14	0,10	16 154,35	0,08	1,61	1,15	0,11	8,37	2,06	-	-
Offsite Vehicles	0,02	0,33	0,52	0,00	0,02	6,18	0,56	87 563,52	0,42	8,73	6,23	0,59	45,39	11,14	-	-
Offsite Vehicles	0,00	0,06	0,09	0,00	0,00	1,03	0,09	14 586,77	0,07	1,45	1,04	0,10	7,56	1,86	-	-
Offsite Recycle Vehicles	0,00	0,06	0,65	0,00	0,01	4,17	0,20	47 237,63	0,05	7,43	1,33	0,20	8,51	2,09	-	-
Offsite Recycle Vehicles	0,08	1,17	11,91	0,03	0,27	76,48	3,59	866 597,37	1,00	136,22	24,45	3,76	156,09	38,31	-	-
Offsite Roads	**0,55**	**9,55**	**25,54**	**0,10**	**0,83**	**236,15**	**17,89**	**3 115 050,59**	**11,74**	**363,17**	**183,10**	**18,84**	**1 305,57**	**320,46**	**-**	**-**

2050 Traffic - Plan Concept 2

Traffic Type	Route Start	Route End	Source Name	Road Length, One Way (meters)	Road Length, One Way (miles)	Percent Paved Road (%)	Paved Road Length (meters)	Unpaved Road Length (meters)	Annual Vehicle Qty	Daily Peaking Factor	LDA	LDT1 and LDT2	LHD1	LHD2	MDV	MHD small	MHD large	HHD	VOC	CO	NOx	SO2	PM10	PM10	PM2.5	CO2	CH4	N2O	CO2e	DPM	PM10	PM2.5	PM10	PM2.5
																			Daily Vehicle Exhaust Emissions							Annual Vehicle Exhaust Emissions							Paved Road Fugitive Dust		Unpaved Road Fugitive Dust	
																					(lb/day)													(lb/yr)			
Inbound Customers	Direct	MRF	MRF Inbound Customers	814	0,505823	100%	814	-	61 790	1,28265	-	494	1 176	3 953	760	1 945	30 605	2 469	0,02	0,14	1,08	0,00	0,02	6,85	0,50	101 872,35	0,22	15,96	5,42	0,52	6 948,59	1 705,56	-	-
Internal Ops	MRF	Landfill	MRF to Landfill Internal Ops Vehicles	1 330	0,826697	80%	1 064	266	36 389	1,28265	-	-	-	2	3	13	11 867	8 062	0,00	0,07	0,76	0,00	0,02	4,36	0,21	61 013,04	0,06	9,59	1,40	0,22	2 678,27	657,39	1 458,90	145,89
Internal Ops	MRF	Inert	MRF to C&D/Inert Internal Ops Vehicles	792	0,491944	90%	713	79	869	1,28265	-	-	-	-	-	-	308	-	0,00	0,00	0,01	0,00	0,00	0,04	0,00	803,30	0,00	0,13	0,01	0,00	46,47	11,41	11,25	1,12
Internal Ops	MRF	Compost	MRF to Compost Internal Ops Vehicles	1 099	0,683078	90%	989	110	985	1,28265	-	-	-	-	-	-	1 346	-	0,00	0,00	0,04	0,00	0,00	0,19	0,01	3 513,62	0,00	0,55	0,06	0,01	203,25	49,89	49,21	4,92
Outbound Recyclables	MRF	Market/Reuse	MRF Outbound Recyclables	905	0,562252	100%	905	-	5 426	1,28265	-	2	-	15	21	32	1 185	2 896	0,00	0,02	0,18	0,00	0,00	1,14	0,05	13 993,53	0,02	2,20	0,37	0,06	696,76	171,02	-	-
Inbound Customers	Direct	Compost	Compost Inbound Customers	754	0,468742	100%	754	-	28 594	1,28265	-	45	726	3 744	210	2 309	8 208	414	0,01	0,07	0,33	0,00	0,01	2,85	0,29	35 019,08	0,15	5,50	3,68	0,30	2 627,71	644,98	-	-
Internal Ops	Compost	Landfill	Compost to Landfill Internal Ops Vehicles	1 459	0,906579	80%	1 167	292	negligible	1,28265	-	-	-	-	-	-	-	-	-	-	-	-	-	-	-	-	-	-	-	-	-	-	-
Outbound Recyclables	Compost	Market/Reuse	Compost Outbound Material	816	0,506742	100%	816	-	6 947	1,28265	-	-	-	-	-	-	-	5 394	0,00	0,03	0,28	0,00	0,01	1,79	0,08	20 063,35	0,02	3,15	0,57	0,09	905,29	222,21	-	-
Inbound Customers	Direct	C&D	C&D/Inert Inbound Customers	595	0,369595	100%	595	-	61 856	1,28265	-	567	1 827	9 024	505	8 516	3 667	490	0,03	0,15	0,40	0,00	0,02	4,87	0,60	48 572,06	0,34	7,57	8,26	0,63	4 127,80	1 013,19	-	-
Internal Ops	C&D	Landfill	C&D/Inert to Landfill Internal Ops Vehicles	1 715	1,065838	80%	1 372	343	7 113	1,28265	-	-	-	1	2	7	6 091	4 138	0,00	0,03	0,39	0,00	0,01	2,24	0,11	31 314,84	0,03	4,92	0,72	0,11	1 374,62	337,41	748,78	74,88
Outbound Recyclables	C&D	Market/Reuse				100%	-	-	negligible	1,28265	-								-	-	-	-	-	-	-	-	-	-	-	-	-	-	-	-
Inbound Customers	Direct	Inert	C&D/Inert Inbound Customers	595	0,369595	100%	595	-	28 549	1,28265	-	930	2	32	1	287	168	9	0,00	0,01	0,01	0,00	0,00	0,12	0,01	1 983,93	0,01	0,21	0,06	0,01	239,92	58,89	-	-
Internal Ops	Inert	Landfill	C&D/Inert to Landfill Internal Ops Vehicles	1 715	1,065838	80%	1 372	343	negligible	1,28265	-	-	-	-	-	-	-	-	-	-	-	-	-	-	-	-	-	-	-	-	-	-	-
Outbound Recyclables	Inert	Market/Reuse				100%	-	-	negligible	1,28265	-								-	-	-	-	-	-	-	-	-	-	-	-	-	-	-	-
Inbound Customers	Direct	HHW - Weekday	HHW Inbound Customers	912	0,566610	100%	912	-	19 997	1,28265	-	16 685	17	65	12	46	1 748	-	0,00	0,09	0,06	0,00	0,00	0,98	0,07	17 646,13	0,08	0,92	0,45	0,07	3 117,09	765,10	-	-
Inbound Customers	Direct	HHW - Weekend	HHW Inbound Customers	912	0,566610	100%	912	-	13 649	1,28265	-	10 338	10	40	7	29	1 083	-	0,00	0,05	0,03	0,00	0,00	0,61	0,04	10 933,00	0,05	0,57	0,28	0,04	1 931,25	474,03	-	-
Internal Ops	HHW	MRF				100%	-	-	negligible	1,28265	-	-	-	-	-	-	-	-	-	-	-	-	-	-	-	-	-	-	-	-	-	-	-	-
Outbound Recyclables	HHW	Contractor				100%	-	-	negligible	1,28265	-	-	-	-	-	-	-	-	-	-	-	-	-	-	-	-	-	-	-	-	-	-	-	-
Inbound Customers	Direct	Public - Self Haul to Public	Public (self haul non-organics) Inbound Customers	912	0,566610	100%	912	-	204 341	1,28265	-	174 968	-	-	-	-	-	-	0,01	0,87	0,04	0,00	0,03	7,42	0,52	134 691,36	0,79	1,70	3,21	0,56	29 364,33	7 207,61	-	-
Inbound Customers	Direct	Public - Self Haul to Compost	Public (self haul organics) Inbound Customers	816	0,506742	100%	816	-	52 287	1,28265	-	37 820	-	-	-	-	-	-	0,00	0,19	0,01	0,00	0,01	1,60	0,11	29 114,46	0,17	0,37	0,69	0,12	6 347,30	1 557,97	-	-
Internal Ops	Public	MRF	Public to MRF Internal Ops Vehicles	697	0,433372	100%	697	-	2 432	1,28265	-	-	-	1	-	8	532	292	0,00	0,00	0,03	0,00	0,00	0,17	0,01	2 497,10	0,00	0,39	0,06	0,01	139,78	34,31	-	-
Internal Ops	Public	C&D	Public to C&D/Inert Internal Ops Vehicles	388	0,240804	90%	349	39	2 562	1,28265	-	-	-	(0)	-	(3)	(232)	(127)	(0,00)	(0,00)	(0,01)	(0,00)	(0,00)	(0,08)	(0,00)	(1 087,49)	(0,00)	(0,17)	(0,02)	(0,00)	(54,79)	(13,45)	(13,26)	(1,33)
Internal Ops	Public	Landfill	Public to Landfill Internal Ops Vehicles	1 459	0,906579	80%	1 167	292	1 632	1,28265	-	-	-	-	-	-	1 538	-	0,00	0,00	0,04	0,00	0,00	0,22	0,01	4 017,10	0,00	0,63	0,07	0,01	206,56	50,70	112,52	11,25
Inbound Customers	Direct	Buyback - Public	Buyback (public) Inbound Customers	912	0,566610	100%	912	-	51 774	1,28265	-	42 739	43	167	30	119	4 477	-	0,00	0,22	0,14	0,00	0,01	2,52	0,17	45 200,49	0,21	2,35	1,14	0,18	7 984,41	1 959,81	-	-
Inbound Customers	Direct	Buyback - Commercial	Buyback (commercial) Inbound Customers	905	0,562252	100%	905	-	9 660	1,28265	-	6 611	7	26	5	18	693	-	0,00	0,03	0,02	0,00	0,00	0,39	0,03	6 991,87	0,03	0,36	0,18	0,03	1 235,07	303,15	-	-
Internal Ops	Buyback	MRF				100%	-	-	negligible	1,28265	-	-	-	-	-	-	-	-	-	-	-	-	-	-	-	-	-	-	-	-	-	-	-	-
Outbound Recyclables	Buyback	Market/Reuse				100%	-	-	negligible	1,28265	-	-	-	-	-	-	-	-	-	-	-	-	-	-	-	-	-	-	-	-	-	-	-	-
Inbound Customers	Direct	Landfill	Landfill Inbound Customers	842	0,523136	80%	674	168	18 829	1,28265	-	(51)	(39)	(257)	(31)	(516)	(1 367)	(82)	(0,00)	(0,01)	(0,06)	(0,00)	(0,00)	(0,38)	(0,03)	(5 675,35)	(0,01)	(0,89)	(0,31)	(0,03)	(314,52)	(77,20)	(171,32)	(17,13)
																		Onsite Roads	**0,08**	**1,96**	**3,79**	**0,02**	**0,13**	**37,91**	**2,78**	**562 477,77**	**2,17**	**56,01**	**26,30**	**2,94**	**69 805,18**	**17 134,00**	**2 196,07**	**219,61**
Employees			10,8							1,28265				1 080					0,00	0,01	0,00	0,00	0,00	0,30	0,06	1 425,08	0,03	0,22	0,76	0,06	0,71	0,18	-	-
Offsite Vehicles		65 Foothills	Comes off of 65 to Foothills		9,60					1,28265		1 075 333	26 927	128 058	9 437	121 948	252 451	17 984	0,44	7,86	12,28	0,07	0,52	146,85	13,29	2 081 485,87	10,08	207,51	148,13	14,03	1 078,94	264,83	-	-
Offsite Vehicles	Industrial	Athens	Comes off of Industrial to Athens		0,55					1,28265		8 346	209	994	73	946	1 959	140	0,00	0,06	0,10	0,00	0,00	1,14	0,10	16 154,35	0,08	1,61	1,15	0,11	8,37	2,06	-	-
Offsite Vehicles	Northbound	Fiddyment	Northbound Fiddyment		1,57					1,28265		45 237	1 133	5 387	397	5 130	10 620	757	0,02	0,33	0,52	0,00	0,02	6,18	0,56	87 563,52	0,42	8,73	6,23	0,59	45,39	11,14	-	-
Offsite Vehicles	Southbound	Fiddyment	Southbound Fiddyment		0,52					1,28265		7 536	189	897	66	855	1 769	126	0,00	0,06	0,09	0,00	0,00	1,03	0,09	14 586,77	0,07	1,45	1,04	0,10	7,56	1,86	-	-
Offsite Recycle Vehicles	Industrial	Athens	Comes off of Industrial to Athens		5,21					1,28265		1	-	7	9	14	518	12 321	0,00	0,06	0,65	0,00	0,01	4,17	0,20	47 237,63	0,05	7,43	1,33	0,20	8,51	2,09	-	-
Offsite Recycle Vehicles		65 Foothills	Comes off of 65 to Foothills		95,58					1,28265		14,09	-	119,78	169,10	260,70	9 511,85	226 041,46	0,08	1,17	11,91	0,03	0,27	76,48	3,59	866 597,37	1,00	136,22	24,45	3,76	156,09	38,31	-	-
																		Offsite Roads	**0,55**	**9,55**	**25,54**	**0,10**	**0,83**	**236,15**	**17,89**	**3 115 050,59**	**11,74**	**363,17**	**183,10**	**18,84**	**1 305,57**	**320,46**	**-**	**-**

Fugitive Dust Emission Factors

Vehicle Travel on Paved Surfaces (Road Dust)

Emission Factor calculated as follows, per Equation 1 from Section 13.2.1 of *AP-42* (U.S. EPA, 2011), which is generally consistent with Section 5.3 of Appendix A of the *CalEEMod User's Guide* (Breeze Software, 2017):

Emission Factor (lb/VMT) = k (lb/VMT) x [sL (g/m^2)]$^{0.91}$ x [W (tons)]$^{1.02}$

Pollutant	Size Multiplier, lb/VMT [a]	sL (Road Surface Silt Loading, g/m^2) [b,c]	W (Mean Vehicle Weight, tons) [b,c]	Emission Factor (lb/VMT)
Onsite Paved Road PM_{10}	0,0022	7,4	11,75	0,168
Onsite Paved Road $PM_{2.5}$	0,00054	7,4	11,75	0,041
Offsite Paved Road PM_{10}	0,0022	0,1	2,4	0,001
Offsite Paved Road $PM_{2.5}$	0,00054	0,1	2,4	0,000

Notes:

[a] Particle Size Multiplier (k) taken from Table 13.2.1-1 of Section 13.2.1 of *AP-42* (U.S. EPA, 2011).

[b] Mean Vehicle Weight (W) and Road Surface Silt Loading (sL) taken from Section 5.3 of Appendix A of the *CalEEMod User's Guide* .

[c] Mean Vehicle Weight (W) assumes that heavy- and light-duty trucks weigh an average of 16.5 tons and Road Surface Silt Loading (sL) average value taken from Table 13.2.1-3 for Municipal solid waste landfills.

Vehicle Travel on Unpaved Surfaces (Road Dust)

Emission Factor calculated as follows, per Equations 1a and 2 from Section 13.2.2 of *AP-42* (U.S. EPA, 2006):

Emission Factor (lb/VMT) = {k (lb/VMT) x [s (%) / 12)]^a x [W (tons) / 3]^b} x [(365-P) / 365]

Pollutant	k (Particle Size Multiplier, lb/VMT) [a]	s (Silt Content, %) [b]	W (Mean Vehicle Weight, tons) [c]	P (Days of Precipitation > 0.01") [d]	a (Constant) [a]	b (Constant) [a]	Emission Factor (lb/VMT)	Reduction From Watering 2x Daily (%) [e]		Controlled Emission Factor (lb/VMT)
Unpaved Road PM_{10}	1,5	6,4	16,5	74	0,9	0,45	1,463	75%		0,366
Unpaved Road $PM_{2.5}$	0,15	6,4	16,5	74	0,9	0,45	0,146	75%		0,037

Notes:

[a] Particle Size Multplier (k) and Constants (a and b) taken from Table 13.2.2-2 of Section 13.2.2 of *AP-42* (U.S. EPA, 2006) for industrial roads.

[b] Silt Content (s) taken from Table 13.2.2-1 of Section 13.2.2 of *AP-42* (U.S. EPA, 2006) Mean value for municipal solid waste landfills.

[c] Mean Vehicle Weight (W) assumes that heavy- and light-duty trucks weigh an average of 16.5 tons.

[d] Days of precipitation greater than 0.01 inch (P) taken as the CalEEMod default for the climate region of Placer County APCD.

[e] Percent reduction from watering three times daily per Sacramento Metropolitan Air Quality Management District (SMAQMD). 2015. CEQA Guide. June.

EMFAC2017 (v1.0.2) Emission Rates
Region Type: Air District
Region: PLACER COUNTY APCD
Calendar Year: 2050
Season: Annual
Vehicle Classification: EMFAC2007 Categories
Units: miles/day for VMT, g/mile for RUNEX, PMBW and PMTW. Note 'day' in the unit is operation day.

Offsite Emission Factors - 2050

Region	Calendar Year	Vehicle Category	Model Year	Speed	Fuel	VMT	ROG_RUNEX	CO_RUNEX	NOx_RUNEX	SOx_RUNEX	PM10_RUNEX	PM2.5_RUNEX	CO2_RUNEX	CH4_RUNEX	N2O_RUNEX	TOG_RUNEX	PM10_PMTW	PM10_PMBW
PLACER COUNTY APCD	2050	LDA	Aggregated	40	GAS	992 843,44	0,001336868	0,39159642	0,016799572	0,001717521	0,000408512	0,000375612	173,56042	0,000491635	0,002844206	0,001950755	0,007999995	0,008195423
PLACER COUNTY APCD	2050	LDT1	Aggregated	40	GAS	144 217,29	0,001398398	0,394271184	0,018078971	0,001969021	0,000418945	0,000385205	198,975183	0,000513107	0,002987367	0,002040538	0,007999996	0,009798319
PLACER COUNTY APCD	2050	LDT2	Aggregated	40	GAS	463 710,94	0,001896964	0,451383996	0,016895398	0,001951342	0,000414892	0,000381478	197,188682	0,000670069	0,002854098	0,002768045	0,007999996	0,009748071
		LDT1 / LDT2	Average				0,001647681	0,42282759	0,017487185	0,001960181	0,000416919	0,000383341	198,0819325	0,000591588	0,002920732	0,002404292	0,007999996	0,009773195
PLACER COUNTY APCD	2050	LHDT1	Aggregated	40	DSL	5 730,52	0,032303998	0,151548407	0,055283314	0,003287973	0,005366989	0,005134816	347,8012926	0,001500459	0,05466952	0,036775954	0,012000003	0,078000022
PLACER COUNTY APCD	2050	LHDT2	Aggregated	40	DSL	2 293,47	0,033432313	0,161435076	0,103479286	0,003736914	0,013007867	0,012445153	395,2901872	0,001552867	0,062134113	0,038060466	0,012000003	0,091000026
PLACER COUNTY APCD	2050	MDV	Aggregated	40	DSL	9 509,45	0,003767999	0,124978993	0,008507501	0,002175659	0,000802969	0,000768233	230,1408575	0,000175016	0,036174938	0,004289616	0,007999996	0,009978976
PLACER COUNTY APCD	2050	MHDT	Aggregated	40	DSL	25 367,61	0,005559728	0,05843265	0,890703821	0,006018994	0,004563836	0,004366407	637,0988155	0,000258235	0,100143062	0,006329327	0,016000005	0,044841778
PLACER COUNTY APCD	2050	HHDT	Aggregated	40	DSL	16761,34729	0,012851365	0,144597798	1,583428336	0,008678071	0,010004733	0,009571933	918,5570233	0,000596913	0,144384372	0,014630301	0,03600001	0,107228848

EMFAC2017 (v1.0.2) Emission Rates
Region Type: Air District
Region: PLACER COUNTY APCD
Calendar Year: 2050
Season: Annual
Vehicle Classification: EMFAC2007 Categories
Units: miles/day for VMT, g/mile for RUNEX, PMBW and PMTW. Note 'day' in the unit is operation day.

Onsite Emission Factors - 2050

Region	Calendar Yea	Vehicle Categ	Model Year	Speed	Fuel	VMT	ROG_RUNEX	CO_RUNEX	NOx_RUNEX	SOx_RUNEX	PM10_RUNEX	PM2.5_RUNEX	CO2_RUNEX	CH4_RUNEX	N2O_RUNEX	TOG_RUNEX	PM10_PMTW	PM10_PMBW
PLACER COUNTY APCD	2050	LDA	Aggregated	15	GAS	41589,77007	0,004631644	0,591933238	0,025919383	0,003020579	0,001427803	0,001312813	305,2381994	0,001700882	0,004348355	0,006758484	0,007999995	0,008195423
PLACER COUNTY APCD	2050	LDT1	Aggregated	15	GAS	5568,226317	0,004837493	0,59672022	0,027455717	0,003469798	0,001460699	0,001343059	350,6330517	0,001772002	0,004511307	0,007058858	0,007999996	0,009798319
PLACER COUNTY APCD	2050	LDT2	Aggregated	15	GAS	17859,59964	0,006561991	0,68324225	0,025595099	0,003441005	0,001445978	0,001329524	347,7233768	0,002313157	0,004301616	0,009575242	0,007999996	0,009748071
		LDT1 / LDT2	Average				0,005699742	0,639981235	0,026525408	0,003455401	0,001453339	0,001336291	349,1782142	0,002042579	0,004406461	0,00831705	0,007999996	0,009773195
PLACER COUNTY APCD	2050	LHDT1	Aggregated	15	DSL	19970,57806	0,277130885	1,293813696	0,137827365	0,004924378	0,010037694	0,009603468	520,8999592	0,0128722	0,08187822	0,315495087	0,012000003	0,078000022
PLACER COUNTY APCD	2050	LHDT2	Aggregated	15	DSL	7992,626865	0,279601631	1,326574061	0,182742983	0,005658186	0,024415185	0,023358995	598,5221215	0,012986961	0,094079343	0,318307868	0,012000003	0,091000026
PLACER COUNTY APCD	2050	MDV	Aggregated	15	DSL	375,8397712	0,032635681	1,080660394	0,026331021	0,004232407	0,001524443	0,001458496	447,7034272	0,001515865	0,070372744	0,037153553	0,007999996	0,009978976
PLACER COUNTY APCD	2050	MHDT	Aggregated	15	DSL	20237,4656	0,018250142	0,264608439	3,765767498	0,011189254	0,003351955	0,003206951	1184,360824	0,000847672	0,186165028	0,020776398	0,016000005	0,044841778
PLACER COUNTY APCD	2050	HHDT	Aggregated	15	DSL	13305,43799	0,042140679	0,65567743	6,64046455	0,015938907	0,007378502	0,007059311	1687,102427	0,001957325	0,265189007	0,047973955	0,03600001	0,107228848

EMFAC2017 (v1.0.2) Emission Rates
Region Type: Air District
Region: PLACER COUNTY APCD
Calendar Year: 2018
Season: Annual
Vehicle Classification: EMFAC2007 Categories
Units: miles/day for VMT, g/mile for RUNEX, PMBW and PMTW. Note 'day' in the unit is operation day.

Onsite Emission Factors - 2018

Region	Calendar Yea	Vehicle Categ	Model Year	Speed	Fuel	VMT	ROG_RUNEX	CO_RUNEX	NOx_RUNEX	SOx_RUNEX	PM10_RUNEX	PM2.5_RUNEX	CO2_RUNEX	CH4_RUNEX	N2O_RUNEX	TOG_RUNEX
PLACER COUNTY APCD	2018	LDA	Aggregated	15	GAS	22091,81743	0,072126325	1,917143167	0,130475699	0,004640921	0,004952875	0,004555647	468,9783897	0,015863479	0,011078815	0,103161207
PLACER COUNTY APCD	2018	LDT1	Aggregated	15	GAS	3415,56416	0,139595295	3,521075366	0,288225288	0,00535731	0,007345384	0,006757216	541,371475	0,028748579	0,019043786	0,199222872
PLACER COUNTY APCD	2018	LDT2	Aggregated	15	GAS	13687,06703	0,080326804	2,202082988	0,227016205	0,005970483	0,004555966	0,004190088	603,3343686	0,017959459	0,015675028	0,115761383
PLACER COUNTY APCD	2018	LHDT1	Aggregated	15	DSL	29870,61161	0,359483958	1,484306759	3,405390303	0,006702449	0,058638605	0,056101925	708,9840403	0,016697343	0,111442418	0,409248586
PLACER COUNTY APCD	2018	LHDT2	Aggregated	15	DSL	9320,016251	0,317214651	1,294483662	2,224935266	0,007583074	0,04298661	0,041127029	802,1364454	0,014734014	0,126084679	0,361127791
PLACER COUNTY APCD	2018	MDV	Aggregated	15	DSL	287,8198988	0,081782729	1,366500923	0,144055931	0,00671124	0,014175662	0,013562429	709,9139509	0,003798651	0,111588587	0,0931042
PLACER COUNTY APCD	2018	MHDT	Aggregated	15	DSL	6429,344843	0,768896813	1,555578207	6,43770497	0,015610133	0,193251912	0,18489192	1652,302315	0,035713265	0,259718914	0,875330492
PLACER COUNTY APCD	2018	HHDT	Aggregated	15	DSL	8053,646763	0,661810537	1,8517598	9,736199811	0,024868944	0,122047613	0,116767887	2632,329496	0,030739385	0,413765539	0,753420919

EMFAC2017 (v1.0.2) Emission Rates
Region Type: Air District
Region: PLACER COUNTY APCD
Calendar Year: 2018
Season: Annual
Vehicle Classification: EMFAC2007 Categories
Units: miles/day for VMT, g/mile for RUNEX, PMBW and PMTW. Note 'day' in the unit is operation day.

Offsite Emission Factors - 2018

Region	Calendar Yea	Vehicle Categ	Model Year	Speed	Fuel	VMT	ROG_RUNEX	CO_RUNEX	NOx_RUNEX	SOx_RUNEX	PM10_RUNEX	PM2.5_RUNEX	CO2_RUNEX	CH4_RUNEX	N2O_RUNEX	TOG_RUNEX
PLACER COUNTY APCD	2018	LDA	Aggregated	40	GAS	662691,1313	0,015811806	0,983402776	0,067480427	0,002615459	0,001296869	0,001192818	264,2996315	0,003640166	0,006293692	0,022627986
PLACER COUNTY APCD	2018	LDT1	Aggregated	40	GAS	91457,91841	0,032056342	1,602356486	0,135621383	0,002996489	0,001902649	0,001750323	302,8037522	0,006791316	0,00983076	0,045766666
PLACER COUNTY APCD	2018	LDT2	Aggregated	40	GAS	341670,7604	0,018782215	1,153800357	0,109409427	0,003334346	0,0012486	0,001148401	336,9452257	0,00434607	0,008436844	0,02698945
PLACER COUNTY APCD	2018	LHDT1	Aggregated	40	DSL	8571,322754	0,11326465	0,593190993	4,162744734	0,004475179	0,024725105	0,023655508	473,3837299	0,005260926	0,07440933	0,128944274
PLACER COUNTY APCD	2018	LHDT2	Aggregated	40	DSL	2674,363297	0,080175606	0,410456871	2,594410339	0,005008194	0,018897578	0,018080077	529,7659924	0,003724004	0,083271837	0,091274598
PLACER COUNTY APCD	2018	MDV	Aggregated	40	DSL	5945,066356	0,012929492	0,18724086	0,100199683	0,003421002	0,006852189	0,006555767	361,8731341	0,00060055	0,056881417	0,014719368
PLACER COUNTY APCD	2018	MHDT	Aggregated	40	DSL	8362,960493	0,153103733	0,558485779	3,46381207	0,008946419	0,088402026	0,084577794	946,9611147	0,007111272	0,1488491	0,174296946
PLACER COUNTY APCD	2018	HHDT	Aggregated	40	DSL	10051,57869	0,156770661	0,656592178	5,239475109	0,014402688	0,072322063	0,069193442	1524,496562	0,007281591	0,23962963	0,178471464

WPWMA Off-Road Equipment (Landfill / MRF / C&D / Composting)
Operation Emissions - Proposed Project Exhaust Emissions

Assumptions:

Equipment for Operation During:	2020 - 2050	
Operation Schedule:	52	weeks/yr
	6	days/week
	10	hrs/day

Future Off-Road Equipment at Landfill

Off Road Equipment Type[1]	Number (ea)	Fuel Type (i.e. Diesel, Electric)	Daily Hours of Operation	Annual Days Equipment Used	Horsepower (hp) - Optional
325DL Excavator	1	Diesel	10	261	188
730 Articulated Dump Truck	1	Diesel	10	261	319
D8T CAB/AIR DOZER	1	Diesel	8	261	310
D6T LGP VPAT Dozer	1	Diesel	8	261	202
826H CAB/AIR Landfill Compactor	1	Diesel	6	261	401
826K HRC Landfill Compactor DCA2	1	Diesel	10	261	426
Water Truck 2017 Freightliner	1	Diesel	10	261	280
Light Plant	1	Diesel	3	80	15
Tarp Deployment Machine	1	Gasoline	1	190	10
140H Grader	1	Diesel	1	261	222

[1] Trucks hauling ADC and waste for placement in the landfill are captured in the Internal Operational Traffic values in the WAP Flow Chart.

Off-Road Equipment at MRF

Off Road Equipment Type[1]	Number (ea)	Fuel Type (i.e. Diesel, Electric)	Daily Hours of Operation	Annual Days Equipment Used	Horsepower (hp) - Optional
Loader	3	Diesel	10	261	203
Forklift	6	Propane	10	261	97
Sweeper, Kubota, Model: V2003-M-T-ES02	1	Diesel	5	261	55
Roll off truck	3	Diesel	10	261	350

[1] Trucks hauling material from the MRF to other on-site facilities (C&D, landfill, inerts) and off-site locations (for market or reuse) are captured in the Internal

Off-Road Equipment at C&D Facility

Off Road Equipment Type[1]	Number (ea)	Fuel Type (i.e. Diesel, Electric)	Daily Hours of Operation	Annual Days Equipment Used	Horsepower (hp) - Optional
Loader	2	Diesel	10	261	203
320F Excavator	1	Diesel	10	261	188
Portable Wood Grinder	1	Diesel	5	261	500
Forklift	2	Propane	10	261	97
Roll Off Truck	1	Diesel	10	261	350

[1] Trucks hauling material from the C&D facility to other on-site facilities (landfill, inerts) and off-site locations (for market or reuse) are captured in the

Off-Road Equipment at Composting Facility

Off Road Equipment Type	Number (ea)	Fuel Type (i.e. Diesel, Electric)	Daily Hours of Operation	Annual Days Equipment Used	Horsepower (hp) - Optional
Track-Mounted Horizontal Grinder, Rotochopper B66	1	Diesel	5	days/week	1050
Front-End Loader (e.g. Cat 980 or equivalent)	2	Diesel	10	days/week	425
Portable Misting System	1	Electric	5	days/week	-
Self-Propelled Straddle Turner (e.g. Vermeer CT820 or equivalent)[1]	2	Diesel	6	days/week	540
Off-Highway Trucks[2]	1	Diesel	6	days/week	402
Water Truck	2	Diesel	10	Diesel	280

[1] Assumes windrows turned weekly.

[2] Hp taken as default from CalEEMod.

WPWMA Landfill
Combustion Emissions - Offroad Equipment
Net Increase in 2050 from 2018 Baseline

Offroad Mobile Diesel Equipment at Landfill

Project Vehicle Type ID	Equipment Description	HP Estimate
325DL Excavator	Excavator - Gen Ops	188
730 Articulated Dump Truck	Articulated Dump Truck	319
D8T CAB/AIR DOZER	Dozer Used at LF	310
D6T LGP VPAT Dozer	Dozer Used at LF	202
826H CAB/AIR Landfill Compactor	Landfill Compactor	401
826K HRC Landfill Compactor DCA2	Landfill Compactor	426
Water Truck 2017 Freightliner	Water Truck	280
Light Plant	Light Plant	15
Tarp Deployment Machine	Tarp Deployment (Gasoline)	10
140H Grader	Graders	222

Offroad Mobile Diesel Equipment at MRF

Project Vehicle Type ID	Equipment Description	HP Estimate
Loader	Loaders	203
Forklift	Forklifts	97
Sweeper, Kubota, Model: V2003-M-T-ES02	Sweeper	55
Roll off truck	Off-Highway Truck	350

Offroad Mobile Diesel Equipment at C&D

Project Vehicle Type ID	Equipment Description	HP Estimate
Loader	Loaders	203
320F Excavator	Excavator	188
Portable Wood Grinder	Grinder	500
Forklift	Forklifts	97
Roll Off Truck	Off-Highway Truck	350

Offroad Mobile Diesel Equipment at Composting

Project Vehicle Type ID	Equipment Description	HP Estimate
Track-Mounted Horizontal Grinder, Rotochopper B66	Grinder	1050
Front-End Loader (e.g. Cat 980 or equivalent)	Loader	425
Self-Propelled Straddle Turner (e.g. Vermeer CT820 or equivalent)1	Compost Turner	540
Off-Highway Trucks2	Off-Highway Truck	402
Water Truck	Off-Highway Truck	280

Notes:
Offroad combustion emissions use values from CalEEMod, Appendix D Table 3.4 OFFROAD Equipment Emission Factors (g/bhp-hr), October 2017
Scenario year for equipment emission factors is 2040, the highest year provided in CalEEMod App D.

GWP Values from Table A-1 to Subpart A 40 CFR Part 98*

Pollutant	GWP Value
CH_4	28
N_2O	265

*IPCC Fifth Assessment Report AR5, 2014 update.

Conversions:

2,205 lb/kg
1000 kg/metric ton

WPWMA Landfill
Combustion Emissions - Offroad Equipment
Net Increase in 2050 from 2018 Baseline

Offroad Mobile Diesel Equipment at Landfill Scenario Year: 2050

Project Vehicle Type ID	Model Area	Load Factor	Equip Quantity per Day	Equip_Yr_HP	Time Offroad/day/veh (hours)	Daily Peak Factor	Activity Schedule Estimate (Days/yr)
325DL Excavator	LF_DPM	0,38	1	Excavators_2040_250	5,5	1,28	312
730 Articulated Dump Truck	LF_DPM	0,38	1	Off-Highway Trucks_2040_500	5,5	1,28	312
D8T CAB/AIR DOZER	LF_DPM	0,4	1	Rubber Tired Dozers_2040_500	4,4	1,28	312
D6T LGP VPAT Dozer	LF_DPM	0,4	1	Rubber Tired Dozers_2040_250	4,4	1,28	312
826H CAB/AIR Landfill Compactor	LF_DPM	0,38	1	Rollers_2040_500	3,3	1,28	312
826K HRC Landfill Compactor DCA2	LF_DPM	0,38	1	Rollers_2040_500	5,5	1,28	312
Water Truck 2017 Freightliner	LF_DPM	0,38	1	Off-Highway Trucks_2040_500	5,5	1,28	312
Light Plant	LF_DPM	0,37	1	Other General Industrial Equipment_2040_15	1,7	1,28	312
Tarp Deployment Machine	NA	0,37	1	Other General Industrial Equipment_2040_15	0,6	1,28	312
140H Grader	LF_DPM	0,41	1	Graders_2040_250	0,6	1,28	312

Offroad Mobile Diesel Equipment at MRF Scenario Year: 2050

Project Vehicle Type ID	Model Area	Load Factor	Equip Quantity per Day	Equip_Yr_HP	Time Offroad/day/veh (hours)	Daily Peak Factor	Activity Schedule Estimate (Days/yr)
Loader	MRF_DPM	0,36	3	Rubber Tired Loaders_2040_250	7,4	1,28	312
Forklift	MRF_DPM	0,37	6	Rough Terrain Forklifts_2040_120	7,4	1,28	312
Sweeper, Kubota, Model: V2003-M-T-ES02	MRF_DPM	0,46	1	Sweepers/Scrubbers_2040_120	3,7	1,28	312
Roll off truck	MRF_DPM	0,38	3	Off-Highway Trucks_2040_500	7,4	1,28	312

Offroad Mobile Diesel Equipment at C&D Scenario Year: 2050

Project Vehicle Type ID	Model Area	Load Factor	Equip Quantity per Day	Equip_Yr_HP	Time Offroad/day/veh (hours)	Daily Peak Factor	Activity Schedule Estimate (Days/yr)
Loader	CD_DPM	0,36	2	Rubber Tired Loaders_2040_250	16,3	1,28	312
320F Excavator	CD_DPM	0,38	1	Excavators_2040_250	16,3	1,28	312
Portable Wood Grinder	CD_DPM	0,34	1	Other General Industrial Equipment_2040_500	8,2	1,28	312
Forklift	CD_DPM	0,37	2	Rough Terrain Forklifts_2040_120	16,3	1,28	312
Roll Off Truck	CD_DPM	0,38	1	Off-Highway Trucks_2040_500	16,3	1,28	312

Offroad Mobile Diesel Equipment at Compos Scenario Year: 2050

Project Vehicle Type ID	Model Area	Load Factor	Equip Quantity per Day	Equip_Yr_HP	Time Offroad/day/veh (hours)	Daily Peak Factor	Activity Schedule Estimate (Days/yr)
Track-Mounted Horizontal Grinder, Rotochopper B66	CMP_DPM	0,34	1	Other General Industrial Equipment_2040_1000	5,0	1,28	312
Front-End Loader (e.g. Cat 980 or equivalent)	CMP_DPM	0,42	2	Rubber Tired Loaders_2040_500	10,0	1,28	312
Self-Propelled Straddle Turner (e.g. Vermeer CT820 or equivalent)1	CMP_DPM	0,34	2	Other General Industrial Equipment_2040_750	6,0	1,28	312
Off-Highway Trucks2	CMP_DPM	0,38	1	Off-Highway Trucks_2040_500	6,0	1,28	312
Water Truck	CMP_DPM	0,38	2	Off-Highway Trucks_2040_500	10,0	1,28	312

Notes:
Offroad combustion emissions use values from
Factors (g/bhp-hr), October 2017
Scenario year for equipment emission factors

GWP Values from Table A-1

Pollutant
CH_4
N_2O

*IPCC Fifth Assessment Report AR5, 2014 upda

Conversions:
2,205
1000

Facility	2018 Tons	2050 Tons	Proposed 2050 Equipment Quantity	Factor Increase Based on 2018-2050 Tons	Net Increase Based on 2050 - Baseline
MRF	240 068	416 709	Use 2018 equipment quantity	1,74	0,74
Compost	60 606	157 806	Use 2050 custom quantity (we have a list)	2,6	-
C&D	87 404	229 681	Double 2018 equipment quantity	2,63	1,63
Public	32 387	61 035	Double 2018 equipment quantity	1,88	0,88
Landfill	294 923	456 269	Use 2018 equipment quantity	1,55	0,55

WPWMA Landfill
Combustion Emissions - Offroad Equipment
Net Increase in 2050 from 2018 Baseline

Offroad Mobile Diesel Equipment at Landfill	Emission Factors (g/bhp-hr)									
Project Vehicle Type ID	**VOC (g/bhp-hr)**	**CO (g/bhp-hr)**	**NO_x (g/bhp-hr)**	**SO_2 (g/bhp-hr)**	**CO_2 (g/bhp-hr)**	**CH_4 (g/bhp-hr)**	**N_2O (g/bhp-hr)**	**PM_{10} (g/bhp-hr)**	**$PM_{2.5}$ (g/bhp-hr)**	**DPM (g/bhp-hr)**
325DL Excavator	0,0228	0,836	0,099	0,00228	216	0,00646	0,00290	0,00304	0,00304	0,00304
730 Articulated Dump Truck	0,0228	0,836	0,099	0,00190	216	0,00684	0,00307	0,00304	0,00304	0,00304
D8T CAB/AIR DOZER	0,0240	0,880	0,104	0,00200	227	0,00880	0,00394	0,00320	0,00320	0,00320
D6T LGP VPAT Dozer	0,0240	0,024	0,104	0,00240	227	0,00880	0,00394	0,00320	0,00320	0,00320
826H CAB/AIR Landfill Compactor	0,0228	0,836	0,099	0,00190	216	0,00532	0,00238	0,00304	0,00304	0,00304
826K HRC Landfill Compactor DCA2	0,0228	0,836	0,099	0,00190	216	0,00532	0,00238	0,00304	0,00304	0,00304
Water Truck 2017 Freightliner	0,0228	0,836	0,099	0,00190	216	0,00684	0,00307	0,00304	0,00304	0,00304
Light Plant	0,0444	1,517	1,018	0,00296	210	0,01961	0,00879	0,00296	0,00296	0,00296
Tarp Deployment Machine	0,1200	1,517	1,018	0,00296	210	0,01961	0,00879	0,00296	0,00296	0,00296
140H Grader	0,0246	0,902	0,107	0,00246	233	0,00697	0,00312	0,00328	0,00328	0,00328

Offroad Mobile Diesel Equipment at MRF	Emission Factors (g/bhp-hr)									
Project Vehicle Type ID	**VOC (g/bhp-hr)**	**CO (g/bhp-hr)**	**NO_x (g/bhp-hr)**	**SO_2 (g/bhp-hr)**	**CO_2 (g/bhp-hr)**	**CH_4 (g/bhp-hr)**	**N_2O (g/bhp-hr)**	**PM_{10} (g/bhp-hr)**	**$PM_{2.5}$ (g/bhp-hr)**	**DPM (g/bhp-hr)**
Loader	0,0216	0,792	0,094	0,00216	205	0,00576	0,00258	0,00288	0,00288	0,00288
Forklift	0,0222	1,369	0,096	0,00222	210	0,00851	0,00381	0,00296	0,00296	0,00296
Sweeper, Kubota, Model: V2003-M-T-ES02	0,0552	1,702	1,260	0,00276	261	0,01012	0,00454	0,00368	0,00368	0,00368
Roll off truck	0,0228	0,836	0,099	0,00190	216	0,00684	0,00307	0,00304	0,00304	0,00304

Offroad Mobile Diesel Equipment at C&D	Emission Factors (g/bhp-hr)									
Project Vehicle Type ID	**VOC (g/bhp-hr)**	**CO (g/bhp-hr)**	**NO_x (g/bhp-hr)**	**SO_2 (g/bhp-hr)**	**CO_2 (g/bhp-hr)**	**CH_4 (g/bhp-hr)**	**N_2O (g/bhp-hr)**	**PM_{10} (g/bhp-hr)**	**$PM_{2.5}$ (g/bhp-hr)**	**DPM (g/bhp-hr)**
Loader	0,0216	0,792	0,094	0,00216	205	0,00576	0,00258	0,00288	0,00288	0,00288
320F Excavator	0,0600	0,836	0,099	0,00228	216	0,00646	0,00290	0,00304	0,00304	0,00304
Portable Wood Grinder	0,0204	0,748	0,088	0,00170	193	0,00578	0,00259	0,00272	0,00272	0,00272
Forklift	0,0222	1,369	0,096	0,00222	210	0,00851	0,00381	0,00296	0,00296	0,00296
Roll Off Truck	0,0228	0,836	0,099	0,00190	216	0,00684	0,00307	0,00304	0,00304	0,00304

Offroad Mobile Diesel Equipment at Compos	Emission Factors (g/bhp-hr)									
Project Vehicle Type ID	**VOC (g/bhp-hr)**	**CO (g/bhp-hr)**	**NO_x (g/bhp-hr)**	**SO_2 (g/bhp-hr)**	**CO_2 (g/bhp-hr)**	**CH_4 (g/bhp-hr)**	**N_2O (g/bhp-hr)**	**PM_{10} (g/bhp-hr)**	**$PM_{2.5}$ (g/bhp-hr)**	**DPM (g/bhp-hr)**
Track-Mounted Horizontal Grinder, Rotochopper B66	0,0204	0,884	0,762	0,00170	193	0,00578	0,00259	0,00544	0,00544	0,00544
Front-End Loader (e.g. Cat 980 or equivalent)	0,0252	0,924	0,109	0,00210	239	0,00672	0,00301	0,00336	0,00336	0,00336
Self-Propelled Straddle Turner (e.g. Vermeer CT820 or equivalent)1	0,0204	0,748	0,088	0,00170	193	0,00578	0,00259	0,00272	0,00272	0,00272
Off-Highway Trucks2	0,0228	0,836	0,099	0,00190	216	0,00684	0,00307	0,00304	0,00304	0,00304
Water Truck	0,0228	0,836	0,099	0,00190	216	0,00684	0,00307	0,00304	0,00304	0,00304

Notes:
Offroad combustion emissions use values from
Factors (g/bhp-hr), October 2017
Scenario year for equipment emission factors

GWP Values from Table A-1

Pollutant
CH_4
N_2O

*IPCC Fifth Assessment Report AR5, 2014 updat

Conversions:

2,205
1000

WPWMA Landfill
Combustion Emissions - Offroad Equipment
Net Increase in 2050 from 2018 Baseline

Offroad Mobile Diesel Equipment at Landfill	Emissions (lb/hr)										
Project Vehicle Type ID	**VOC (lb/hr)**	**CO (lb/hr)**	**NO_x (lb/hr)**	**SO_2 (lb/hr)**	**CO_2 (lb/hr)**	**CH_4 (lb/hr)**	**N_2O (lb/hr)**	**CO_2e (lb/hr)**	**PM_{10} (lb/hr)**	**$PM_{2.5}$ (lb/hr)**	**DPM (lb/hr)**
325DL Excavator	0,012	0,44	0,053	0,00121	115	0,003	0,00154	115	0,0016	0,0016	0,0016
730 Articulated Dump Truck	0,021	0,75	0,089	0,00171	195	0,006	0,00277	196	0,0027	0,0027	0,0027
D8T CAB/AIR DOZER	0,021	0,77	0,091	0,00175	199	0,008	0,00346	200	0,0028	0,0028	0,0028
D6T LGP VPAT Dozer	0,014	0,01	0,059	0,00137	130	0,005	0,00225	131	0,0018	0,0018	0,0018
826H CAB/AIR Landfill Compactor	0,026	0,95	0,112	0,00215	245	0,006	0,00270	246	0,0034	0,0034	0,0034
826K HRC Landfill Compactor DCA2	0,027	1,01	0,119	0,00229	260	0,006	0,00287	261	0,0037	0,0037	0,0037
Water Truck 2017 Freightliner	0,018	0,66	0,078	0,00150	171	0,005	0,00243	172	0,0024	0,0024	0,0024
Light Plant	0,002	0,06	0,043	0,00013	9	0,001	0,00037	9	0,0001	0,0001	0,0001
Tarp Deployment Machine	0,003	0,04	0,029	0,00008	6	0,001	0,00025	6	0,0001	0,0001	0,0001
140H Grader	0,015	0,57	0,067	0,00154	146	0,004	0,00196	147	0,0021	0,0021	0,0021
	0,160	5,274	0,740	0,014	1475,840	0,046	0,021	1482,587	0,021	0,021	0,021

Offroad Mobile Diesel Equipment at MRF	Emissions (lb/hr)										
Project Vehicle Type ID	**VOC (lb/hr)**	**CO (lb/hr)**	**NO_x (lb/hr)**	**SO_2 (lb/hr)**	**CO_2 (lb/hr)**	**CH_4 (lb/hr)**	**N_2O (lb/hr)**	**CO_2e (lb/hr)**	**PM_{10} (lb/hr)**	**$PM_{2.5}$ (lb/hr)**	**DPM (lb/hr)**
Loader	0,037	1,36	0,161	0,00372	352	0,010	0,00445	354	0,0050	0,0050	0,0050
Forklift	0,037	2,25	0,158	0,00365	346	0,014	0,00628	348	0,0049	0,0049	0,0049
Sweeper, Kubota, Model: V2003-M-T-ES02	0,009	0,26	0,196	0,00043	41	0,002	0,00071	41	0,0006	0,0006	0,0006
Roll off truck	0,068	2,48	0,293	0,00564	641	0,020	0,00910	644	0,0090	0,0090	0,0090
	0,150	6,364	0,809	0,013	1380,208	0,046	0,021	1386,932	0,019	0,019	0,019

Offroad Mobile Diesel Equipment at C&D	Emissions (lb/hr)										
Project Vehicle Type ID	**VOC (lb/hr)**	**CO (lb/hr)**	**NO_x (lb/hr)**	**SO_2 (lb/hr)**	**CO_2 (lb/hr)**	**CH_4 (lb/hr)**	**N_2O (lb/hr)**	**CO_2e (lb/hr)**	**PM_{10} (lb/hr)**	**$PM_{2.5}$ (lb/hr)**	**DPM (lb/hr)**
Loader	0,025	0,91	0,107	0,00248	235	0,007	0,00296	236	0,0033	0,0033	0,0033
320F Excavator	0,032	0,44	0,053	0,00121	115	0,003	0,00154	115	0,0016	0,0016	0,0016
Portable Wood Grinder	0,029	1,06	0,125	0,00240	273	0,008	0,00366	274	0,0038	0,0038	0,0038
Forklift	0,012	0,75	0,053	0,00122	115	0,005	0,00209	116	0,0016	0,0016	0,0016
Roll Off Truck	0,023	0,83	0,098	0,00188	214	0,007	0,00303	215	0,0030	0,0030	0,0030
	0,120	3,990	0,436	0,009	951,946	0,030	0,013	956,300	0,013	0,013	0,013

Offroad Mobile Diesel Equipment at Compo	Emissions (lb/hr)										
Project Vehicle Type ID	**VOC (lb/hr)**	**CO (lb/hr)**	**NO_x (lb/hr)**	**SO_2 (lb/hr)**	**CO_2 (lb/hr)**	**CH_4 (lb/hr)**	**N_2O (lb/hr)**	**CO_2e (lb/hr)**	**PM_{10} (lb/hr)**	**$PM_{2.5}$ (lb/hr)**	**DPM (lb/hr)**
Track-Mounted Horizontal Grinder, Rotochopper B66	0,061	2,62	2,261	0,00505	574	0,017	0,00769	576	0,0162	0,0162	0,0162
Front-End Loader (e.g. Cat 980 or equivalent)	0,061	2,22	0,262	0,00505	574	0,016	0,00724	576	0,0081	0,0081	0,0081
Self-Propelled Straddle Turner (e.g. Vermeer CT820 or equivalent)1	0,062	2,28	0,270	0,00519	590	0,018	0,00791	593	0,0083	0,0083	0,0083
Off-Highway Trucks2	0,026	0,95	0,112	0,00216	245	0,008	0,00349	247	0,0035	0,0035	0,0035
Water Truck	0,036	1,32	0,156	0,00301	342	0,011	0,00486	344	0,0048	0,0048	0,0048
	0,245	9,404	3,062	0,020	2324,924	0,070	0,031	2335,136	0,041	0,041	0,041

Notes:
Offroad combustion emissions use values from
Factors (g/bhp-hr), October 2017
Scenario year for equipment emission factors

GWP Values from Table A-1

Pollutant
CH_4
N_2O

*IPCC Fifth Assessment Report AR5, 2014 updat

Conversions:

2,205
1000

WPWMA Landfill
Combustion Emissions - Offroad Equipment
Net Increase in 2050 from 2018 Baseline

Emissions - Uncontrolled

Offroad Mobile Diesel Equipment at Landfill	Emissions (lb/day)										
Project Vehicle Type ID	**VOC (lb/day)**	**CO (lb/day)**	**NO_x (lb/day)**	**SO_2 (lb/day)**	**CO_2 (lb/day)**	**CH_4 (lb/day)**	**N_2O (lb/day)**	**CO_2e (lb/day)**	**PM_{10} (lb/day)**	**$PM_{2.5}$ (lb/day)**	**DPM (lb/day)**
325DL Excavator	0,07	2,4	0,29	0,007	631	0,019	0,008	634	0,009	0,009	0,009
730 Articulated Dump Truck	0,11	4,1	0,49	0,009	1 071	0,034	0,015	1 076	0,015	0,015	0,015
D8T CAB/AIR DOZER	0,09	3,4	0,40	0,008	877	0,034	0,015	882	0,012	0,012	0,012
D6T LGP VPAT Dozer	0,06	0,1	0,26	0,006	571	0,022	0,010	575	0,008	0,008	0,008
826H CAB/AIR Landfill Compactor	0,09	3,1	0,37	0,007	808	0,020	0,009	811	0,011	0,011	0,011
826K HRC Landfill Compactor DCA2	0,15	5,5	0,65	0,013	1 431	0,035	0,016	1 436	0,020	0,020	0,020
Water Truck 2017 Freightliner	0,10	3,6	0,43	0,008	940	0,030	0,013	945	0,013	0,013	0,013
Light Plant	0,00	0,1	0,07	0,000	15	0,001	0,001	15	0,000	0,000	0,000
Tarp Deployment Machine	0,00	0,0	0,02	0,000	3	0,000	0,000	3	0,000	0,000	0,000
140H Grader	0,01	0,3	0,04	0,001	80	0,002	0,001	81	0,001	0,001	0,001
	0,682	22,795	3,020	0,059	6428,582	0,198	0,089	6457,633	0,090	0,090	0,090

Emissions - Uncontrolled

Offroad Mobile Diesel Equipment at MRF	Emissions (lb/day)										
Project Vehicle Type ID	**VOC (lb/day)**	**CO (lb/day)**	**NO_x (lb/day)**	**SO_2 (lb/day)**	**CO_2 (lb/day)**	**CH_4 (lb/day)**	**N_2O (lb/day)**	**CO_2e (lb/day)**	**PM_{10} (lb/day)**	**$PM_{2.5}$ (lb/day)**	**DPM (lb/day)**
Loader	0,28	10,1	1,19	0,028	2 607	0,073	0,033	2 618	0,037	0,037	0,037
Forklift	0,27	16,7	1,17	0,027	2 561	0,104	0,046	2 576	0,036	0,036	0,036
Sweeper, Kubota, Model: V2003-M-T-ES02	0,03	1,0	0,73	0,002	150	0,006	0,003	151	0,002	0,002	0,002
Roll off truck	0,50	18,4	2,17	0,042	4 745	0,150	0,067	4 767	0,067	0,067	0,067
	1,078	46,112	5,260	0,098	10063,108	0,333	0,149	10112,012	0,142	0,142	0,142

Offroad Mobile Diesel Equipment at C&D	Emissions (lb/day)										
Project Vehicle Type ID	**VOC (lb/day)**	**CO (lb/day)**	**NO_x (lb/day)**	**SO_2 (lb/day)**	**CO_2 (lb/day)**	**CH_4 (lb/day)**	**N_2O (lb/day)**	**CO_2e (lb/day)**	**PM_{10} (lb/day)**	**$PM_{2.5}$ (lb/day)**	**DPM (lb/day)**
Loader	0,40	14,8	1,75	0,040	3 828	0,108	0,048	3 844	0,054	0,054	0,054
320F Excavator	0,52	7,2	0,86	0,020	1 871	0,056	0,025	1 880	0,026	0,026	0,026
Portable Wood Grinder	0,24	8,6	1,02	0,020	2 226	0,067	0,030	2 236	0,031	0,031	0,031
Forklift	0,20	12,2	0,86	0,020	1 880	0,076	0,034	1 891	0,026	0,026	0,026
Roll Off Truck	0,37	13,5	1,59	0,031	3 484	0,110	0,049	3 500	0,049	0,049	0,049
	1,726	56,412	6,080	0,130	13290,244	0,417	0,187	13351,428	0,187	0,187	0,187

Offroad Mobile Diesel Equipment at Compo	Emissions (lb/day)										
Project Vehicle Type ID	**VOC (lb/day)**	**CO (lb/day)**	**NO_x (lb/day)**	**SO_2 (lb/day)**	**CO_2 (lb/day)**	**CH_4 (lb/day)**	**N_2O (lb/day)**	**CO_2e (lb/day)**	**PM_{10} (lb/day)**	**$PM_{2.5}$ (lb/day)**	**DPM (lb/day)**
Track-Mounted Horizontal Grinder, Rotochopper B66	0,30	13,1	11,31	0,025	2 868	0,086	0,038	2 881	0,081	0,081	0,081
Front-End Loader (e.g. Cat 980 or equivalent)	0,61	22,2	2,62	0,050	5 737	0,162	0,072	5 761	0,081	0,081	0,081
Self-Propelled Straddle Turner (e.g. Vermeer CT820 or equivalent)1	0,37	13,7	1,62	0,031	3 541	0,106	0,047	3 556	0,050	0,050	0,050
Off-Highway Trucks2	0,16	5,7	0,67	0,013	1 473	0,047	0,021	1 480	0,021	0,021	0,021
Water Truck	0,36	13,2	1,56	0,030	3 420	0,108	0,049	3 436	0,048	0,048	0,048
	1,799	67,978	17,789	0,150	17038,494	0,508	0,228	17113,094	0,280	0,280	0,280

Notes:
Offroad combustion emissions use values from
Factors (g/bhp-hr), October 2017
Scenario year for equipment emission factors

GWP Values from Table A-1

Pollutant
CH_4
N_2O

*IPCC Fifth Assessment Report AR5, 2014 updat

Conversions:

2,205
1000

WPWMA Landfill
Combustion Emissions - Offroad Equipment
Net Increase in 2050 from 2018 Baseline

Offroad Mobile Diesel Equipment at Landfill	Emissions (lb/yr)										
Project Vehicle Type ID	**VOC (lb/yr)**	**CO (lb/yr)**	**NO_x (lb/yr)**	**SO_2 (lb/yr)**	**CO_2 (lb/yr)**	**CH_4 (lb/yr)**	**N_2O (lb/yr)**	**CO_2e (lb/yr)**	**PM_{10} (lb/yr)**	**$PM_{2.5}$ (lb/yr)**	**DPM (lb/yr)**
325DL Excavator	16	595	70	1,6	153 590	5	2,1	154 264	2	2,2	2,2
730 Articulated Dump Truck	28	1 009	119	2,3	260 613	8	3,7	261 824	4	3,7	3,7
D8T CAB/AIR DOZER	23	826	98	1,9	213 271	8	3,7	214 483	3	3,0	3,0
D6T LGP VPAT Dozer	15	15	64	1,5	138 970	5	2,4	139 760	2	2,0	2,0
826H CAB/AIR Landfill Compactor	21	761	90	1,7	196 562	5	2,2	197 273	3	2,8	2,8
826K HRC Landfill Compactor DCA2	37	1 347	159	3,1	348 028	9	3,8	349 287	5	4,9	4,9
Water Truck 2017 Freightliner	24	886	105	2,0	228 751	7	3,2	229 814	3	3,2	3,2
Light Plant	1	26	17	0,1	3 580	0	0,1	3 629	0	0,1	0,1
Tarp Deployment Machine	0	6	4	0,0	795	0	0,0	806	0	0,0	0,0
140H Grader	2	76	9	0,2	19 569	1	0,3	19 654	0	0,3	0,3
	165,844	5544,828	734,584	14,330	1563729,348	48,140	21,580	1570795,914	22,013	22,013	22,013

Offroad Mobile Diesel Equipment at MRF	Emissions (lb/yr)										
Project Vehicle Type ID	**VOC (lb/yr)**	**CO (lb/yr)**	**NO_x (lb/yr)**	**SO_2 (lb/yr)**	**CO_2 (lb/yr)**	**CH_4 (lb/yr)**	**N_2O (lb/yr)**	**CO_2e (lb/yr)**	**PM_{10} (lb/yr)**	**$PM_{2.5}$ (lb/yr)**	**DPM (lb/yr)**
Loader	67	2 455	290	6,7	634 176	18	8,0	636 797	9	8,9	8,9
Forklift	66	4 055	285	6,6	622 895	25	11,3	626 596	9	8,8	8,8
Sweeper, Kubota, Model: V2003-M-T-ES02	8	238	176	0,4	36 592	1	0,6	36 799	1	0,5	0,5
Roll off truck	122	4 468	528	10,2	1 154 152	37	16,4	1 159 518	16	16,2	16,2
	262,299	11216,671	1279,571	23,813	2447814,918	81,037	36,327	2459710,568	34,458	34,458	34,458

Offroad Mobile Diesel Equipment at C&D	Emissions (lb/yr)										
Project Vehicle Type ID	**VOC (lb/yr)**	**CO (lb/yr)**	**NO_x (lb/yr)**	**SO_2 (lb/yr)**	**CO_2 (lb/yr)**	**CH_4 (lb/yr)**	**N_2O (lb/yr)**	**CO_2e (lb/yr)**	**PM_{10} (lb/yr)**	**$PM_{2.5}$ (lb/yr)**	**DPM (lb/yr)**
Loader	98	3 605	426	9,8	931 268	26	11,8	935 117	13,11	13,11	13,11
320F Excavator	126	1 762	208	4,8	455 185	14	6,1	457 183	6,41	6,41	6,41
Portable Wood Grinder	57	2 097	248	4,8	541 583	16	7,3	543 961	7,62	7,62	7,62
Forklift	48	2 978	209	4,8	457 351	19	8,3	460 068	6,44	6,44	6,44
Roll Off Truck	89	3 281	388	7,5	847 418	27	12,0	851 358	11,93	11,93	11,93
	419,723	13721,994	1479,026	31,687	3232804,102	101,387	45,449	3247686,961	45,508	45,508	45,508

Offroad Mobile Diesel Equipment at Compos	Emissions (lb/yr)										
Project Vehicle Type ID	**VOC (lb/yr)**	**CO (lb/yr)**	**NO_x (lb/yr)**	**SO_2 (lb/yr)**	**CO_2 (lb/yr)**	**CH_4 (lb/yr)**	**N_2O (lb/yr)**	**CO_2e (lb/yr)**	**PM_{10} (lb/yr)**	**$PM_{2.5}$ (lb/yr)**	**DPM (lb/yr)**
Track-Mounted Horizontal Grinder, Rotochopper B66	74	3 192	2 750	6,1	697 745	21	9,4	700 809	20	19,6	19,6
Front-End Loader (e.g. Cat 980 or equivalent)	147	5 402	638	12,3	1 395 492	39	17,6	1 401 260	20	19,6	19,6
Self-Propelled Straddle Turner (e.g. Vermeer CT820 or equivalent)1	91	3 334	394	7,6	861 217	26	11,5	864 998	12	12,1	12,1
Off-Highway Trucks2	38	1 387	164	3,2	358 277	11	5,1	359 943	5	5,0	5,0
Water Truck	88	3 220	381	7,3	831 821	26	11,8	835 689	12	11,7	11,7
	437,574	16535,499	4327,155	36,465	4144552,337	123,618	55,415	4162698,600	68,165	68,165	68,165

Notes:
Offroad combustion emissions use values fron
Factors (g/bhp-hr), October 2017
Scenario year for equipment emission factors

GWP Values from Table A-1

Pollutant
CH_4
N_2O

*IPCC Fifth Assessment Report AR5, 2014 updat

Conversions:

2,205
1000

WPWMA Landfill
Combustion Emissions - Offroad Equipment
Net Increase in 2050 from 2018 Baseline

Offroad Mobile Diesel Equipment at Landfill	Emissions (TPY)										
Project Vehicle Type ID	**VOC (TPY)**	**CO (TPY)**	**NO_x (TPY)**	**SO_2 (TPY)**	**CO_2 (TPY)**	**CH_4 (TPY)**	**N_2O (TPY)**	**CO_2e (TPY)**	**PM_{10} (TPY)**	**$PM_{2.5}$ (TPY)**	**DPM (TPY)**
325DL Excavator	0,01	0,30	0,04	0,001	77	0,002	0,001	77	0,00	0,00	0,001
730 Articulated Dump Truck	0,01	0,50	0,06	0,001	130	0,004	0,002	131	0,00	0,00	0,002
D8T CAB/AIR DOZER	0,01	0,41	0,05	0,001	107	0,004	0,002	107	0,00	0,00	0,002
D6T LGP VPAT Dozer	0,01	0,01	0,03	0,001	69	0,003	0,001	70	0,00	0,00	0,001
826H CAB/AIR Landfill Compactor	0,01	0,38	0,04	0,001	98	0,002	0,001	99	0,00	0,00	0,001
826K HRC Landfill Compactor DCA2	0,02	0,67	0,08	0,002	174	0,004	0,002	175	0,00	0,00	0,002
Water Truck 2017 Freightliner	0,01	0,44	0,05	0,001	114	0,004	0,002	115	0,00	0,00	0,002
Light Plant	0,00	0,01	0,01	0,000	2	0,000	0,000	2	0,00	0,00	0,000
Tarp Deployment Machine	0,00	0,00	0,00	0,000	0	0,000	0,000	0	0,00	0,00	0,000
140H Grader	0,00	0,04	0,00	0,000	10	0,000	0,000	10	0,00	0,00	0,000
	0,083	2,772	0,367	0,007	781,865	0,024	0,011	785,398	0,011	0,011	0,011

Offroad Mobile Diesel Equipment at MRF	Emissions (TPY)										
Project Vehicle Type ID	**VOC (TPY)**	**CO (TPY)**	**NO_x (TPY)**	**SO_2 (TPY)**	**CO_2 (TPY)**	**CH_4 (TPY)**	**N_2O (TPY)**	**CO_2e (TPY)**	**PM_{10} (TPY)**	**$PM_{2.5}$ (TPY)**	**DPM (TPY)**
Loader	0,03	1,23	0,15	0,003	317	0,009	0,004	318	0,00	0,00	0,004
Forklift	0,03	2,03	0,14	0,003	311	0,013	0,006	313	0,00	0,00	0,004
Sweeper, Kubota, Model: V2003-M-T-ES02	0,00	0,12	0,09	0,000	18	0,001	0,000	18	0,00	0,00	0,000
Roll off truck	0,06	2,23	0,26	0,005	577	0,018	0,008	580	0,01	0,01	0,008
	0,131	5,608	0,640	0,012	1223,907	0,041	0,018	1229,855	0,017	0,017	0,017

Offroad Mobile Diesel Equipment at C&D	Emissions (TPY)										
Project Vehicle Type ID	**VOC (TPY)**	**CO (TPY)**	**NO_x (TPY)**	**SO_2 (TPY)**	**CO_2 (TPY)**	**CH_4 (TPY)**	**N_2O (TPY)**	**CO_2e (TPY)**	**PM_{10} (TPY)**	**$PM_{2.5}$ (TPY)**	**DPM (TPY)**
Loader	0,05	1,80	0,21	0,005	466	0,013	0,006	468	0,01	0,01	0,007
320F Excavator	0,06	0,88	0,10	0,002	228	0,007	0,003	229	0,00	0,00	0,003
Portable Wood Grinder	0,03	1,05	0,12	0,002	271	0,008	0,004	272	0,00	0,00	0,004
Forklift	0,02	1,49	0,10	0,002	229	0,009	0,004	230	0,00	0,00	0,003
Roll Off Truck	0,04	1,64	0,19	0,004	424	0,013	0,006	426	0,01	0,01	0,006
	0,210	6,861	0,740	0,016	1616,402	0,051	0,023	1623,843	0,023	0,023	0,023

Offroad Mobile Diesel Equipment at Compos	Emissions (TPY)										
Project Vehicle Type ID	**VOC (TPY)**	**CO (TPY)**	**NO_x (TPY)**	**SO_2 (TPY)**	**CO_2 (TPY)**	**CH_4 (TPY)**	**N_2O (TPY)**	**CO_2e (TPY)**	**PM_{10} (TPY)**	**$PM_{2.5}$ (TPY)**	**DPM (TPY)**
Track-Mounted Horizontal Grinder, Rotochopper B66	0,04	2	1	0,003	349	0,010	0,005	350	0,0	0,0	0,010
Front-End Loader (e.g. Cat 980 or equivalent)	0,07	3	0	0,006	698	0,020	0,009	701	0,0	0,0	0,010
Self-Propelled Straddle Turner (e.g. Vermeer CT820 or equivalent)1	0,05	2	0	0,004	431	0,013	0,006	432	0,0	0,0	0,006
Off-Highway Trucks2	0,02	1	0	0,002	179	0,006	0,003	180	0,0	0,0	0,003
Water Truck	0,04	2	0	0,004	416	0,013	0,006	418	0,0	0,0	0,006
	0,219	8,268	2,164	0,018	2072,276	0,062	0,028	2081,349	0,034	0,034	0,034

Notes:
Offroad combustion emissions use values fron
Factors (g/bhp-hr), October 2017
Scenario year for equipment emission factors

GWP Values from Table A-1

Pollutant
CH_4
N_2O

*IPCC Fifth Assessment Report AR5, 2014 updat

Conversions:

2,205
1000

WPWMA Landfill
Offroad Emissions Factors

BSFC for Offroad Diesel Engines for Speciation:

CalEEMod Appendix A:

Diesel heat value	19 300	BTU/lb
BSFC	7 000	BTU/hp-hr
Density Diesel	6,94	lb/gal

https://ww3.arb.ca.gov/msei/ordiesel/usepa_bsfc.pdf

BSFC for Equip <=100 hp	0,408	lb/hp-hr
BSFC for Equip <=100 hp	0,0588	gal/hp-hr
BSFC for Equip >100 hp	0,367	lb/hp-hr
BSFC for Equip >100 hp	**0,0529**	gal/hp-hr

APCD New Stationary Prime Engines:

4,85

https://www.arb.ca.gov/diesel/documents/FinalReg2011.pdf

Table 4: Prime Engines g/bhp-hr

	0-174hp	175	750
Diesel PM	0,01	0,01	0,01
VOC	0,14	0,14	0,14
CO	3,7	2,6	2,6
NO_x	0,3	0,3	0,5

EFs for Tier-specific Engines:

CalEEMod - Appendix D - Default Data Tables - October 2017
http://www.aqmd.gov/docs/default-source/caleemod/05_appendix-d2016-3-2.pdf?sfvrsn=4

Table 3.5 OFFROAD Emission Factor Based on Engine Tier

Tier	Low HP	High HP	CO (g/bhp-hr)	NO_x (g/bhp-hr)	PM_{10} (g/bhp-hr)	$PM_{2.5}$ (g/bhp-hr)	VOC (g/bhp-hr)
Tier 1	25	49	4,1	5,26	0,48	0,48	1,74
	50	74	6,9	6,54	0,552	0,552	1,19
	75	119	6,9	6,54	0,552	0,552	1,19
	120	174	6,9	6,54	0,274	0,274	0,82
	175	299	6,9	5,93	0,108	0,108	0,38
	300	599	6,9	5,93	0,108	0,108	0,38
	600	750	6,9	5,93	0,108	0,108	0,38
	751	2000	6,9	5,93	0,108	0,108	0,38
Tier 2	25	49	4,1	4,63	0,28	0,28	0,29
	50	74	3,7	4,75	0,192	0,192	0,23
	75	119	3,7	4,75	0,192	0,192	0,23
	120	174	3,7	4,17	0,128	0,128	0,19
	175	299	2,6	4,15	0,088	0,088	0,12
	300	599	2,6	3,79	0,088	0,088	0,12
	600	750	2,6	3,79	0,088	0,088	0,12
	751	2000	2,6	3,79	0,088	0,088	0,12
Tier 3	25	49	4,1	4,63	0,28	0,28	0,29
	50	74	3,7	2,74	0,192	0,192	0,12
	75	119	3,7	2,74	0,192	0,192	0,12
	120	174	3,7	2,32	0,112	0,112	0,12
	175	299	2,6	2,32	0,088	0,088	0,12
	300	599	2,6	2,32	0,088	0,088	0,12
	600	750	2,6	2,32	0,088	0,088	0,12
	751	2000	2,6	2,32	0,088	0,088	0,12
Tier 4 Interim	25	49	4,1	4,55	0,128	0,128	0,12
	50	74	3,7	2,74	0,112	0,112	0,12
	75	119	3,7	2,14	0,008	0,008	0,11
	120	174	3,7	2,15	0,008	0,008	0,06
	175	299	2,6	1,29	0,008	0,008	0,08
	300	599	2,6	1,29	0,008	0,008	0,08
	600	750	2,6	1,29	0,008	0,008	0,08
	751	2000	2,6	2,24	0,048	0,048	0,12
Tier 4 Final	25	49	4,1	2,75	0,008	0,008	0,12
	50	74	3,7	2,74	0,008	0,008	0,12
	75	119	3,7	0,26	0,008	0,008	0,06
	120	174	3,7	0,26	0,008	0,008	0,06
	175	299	2,2	0,26	0,008	0,008	0,06
	300	599	2,2	0,26	0,008	0,008	0,06
	600	750	2,2	0,26	0,008	0,008	0,06
	751	2000	2,6	2,24	0,016	0,016	0,06

Source: ARB. 2011. The Carl Moyer Program Guidelines. Available at:http://www.arb.ca.gov/msprog/moyer/guidelines/2011gl/2011cmpgl_3_27_13.pdf

Table 3.3 OFFROAD Default Horsepower and Load Factors

OFFROAD Equipment Type	Horsepower	Load Factor
Aerial Lifts	63	0,31
Air Compressors	78	0,48
Bore/Drill Rigs	221	0,5
Cement and Mortar Mixers	9	0,56
Concrete/Industrial Saws	81	0,73
Cranes	231	0,29
Crawler Tractors	212	0,43
Crushing/Proc. Equipment	85	0,78
Dumpers/Tenders	16	0,38
Excavators	158	0,38
Forklifts	89	0,2
Generator Sets	84	0,74
Graders	187	0,41
Off-Highway Tractors	124	0,44
Off-Highway Trucks	402	0,38
Other Construction Equipment	172	0,42
Other General Industrial Equipment	88	0,34
Other Material Handling Equipment	168	0,4
Pavers	130	0,42
Paving Equipment	132	0,36
Plate Compactors	8	0,43
Pressure Washers	13	0,3
Pumps	84	0,74
Rollers	80	0,38
Rough Terrain Forklifts	100	0,4
Rubber Tired Dozers	247	0,4
Rubber Tired Loaders	203	0,36
Scrapers	367	0,48
Signal Boards	6	0,82
Skid Steer Loaders	65	0,37
Surfacing Equipment	263	0,3
Sweepers/Scrubbers	64	0,46
Tractors/Loaders/Backhoes	97	0,37
Trenchers	78	0,5
Welders	46	0,45

Notes: Based on the weighted average horsepower (by equipment population) and load factors for the mode of the engine groupings in 2011 OFFROAD

EFs using Default Emissions Factors:

CalEEMod - Appendix D - Default Data Tables - October 2017
http://www.aqmd.gov/docs/default-source/caleemod/05_appendix-d2016-3-2.pdf?sfvrsn=4
Table 3.4 OFFROAD Equipment Emission Factors (g/bhp-hr)

Equipment Type	Year	Low HP	High HP	Equip_yr_hp-ceiling	TOG (g/bhp-hr)	VOC (g/bhp-hr)	CO (g/bhp-hr)	NO_x (g/bhp-hr)	SO_2 (g/bhp-hr)	PM_{10} (g/bhp-hr)	$PM_{2.5}$ (g/bhp-hr)	CO_2 (g/bhp-hr)	CH_4 (g/bhp-hr)	N_2O (g/bhp-hr)
Aerial Lifts	1990	6	15	Aerial Lifts_1990_15	5,436	1,804	4,999	9,999	0,833	0,968	0,968	568,299	0,162	0,07262069
Aerial Lifts	1990	16	25	Aerial Lifts_1990_25	8,446	2,213	5	6,92	0,679	0,735	0,735	568,299	0,199	0,089206897
Aerial Lifts	1990	26	50	Aerial Lifts_1990_50	22,237	3,256	6,91	7,372	0,692	0,948	0,948	568,299	0,293	0,131344828
Aerial Lifts	1990	51	120	Aerial Lifts_1990_120	25,547	1,927	5,026	13,323	0,628	1,005	1,005	568,299	0,173	0,077551724
Aerial Lifts	1990	251	500	Aerial Lifts_1990_500	90,051	1,214	6,888	11,7	0,525	0,605	0,605	568,299	0,109	0,048862069
Aerial Lifts	1990	501	750	Aerial Lifts_1990_750	162,768	1,214	6,887	11,7	0,538	0,605	0,605	568,299	0,109	0,048862069
Aerial Lifts	2000	6	15	Aerial Lifts_2000_15	4,911	1,629	4,729	8,804	0,079	0,737	0,737	568,299	0,147	0,065896552
Aerial Lifts	2000	16	25	Aerial Lifts_2000_25	7,927	2,077	4,749	6,401	0,064	0,569	0,569	568,299	0,187	0,083827586
Aerial Lifts	2000	26	50	Aerial Lifts_2000_50	21,066	3,084	6,643	6,596	0,065	0,711	0,711	568,3	0,278	0,12462069
Aerial Lifts	2000	51	120	Aerial Lifts_2000_120	20,809	1,569	4,216	9,602	0,059	0,705	0,705	568,299	0,141	0,063206897
Aerial Lifts	2000	251	500	Aerial Lifts_2000_500	60,706	0,819	3,931	8,191	0,049	0,31	0,31	568,3	0,073	0,032724138
Aerial Lifts	2000	501	750	Aerial Lifts_2000_750	109,732	0,819	3,931	8,191	0,051	0,31	0,31	568,299	0,073	0,032724138
Aerial Lifts	2005	6	15	Aerial Lifts_2005_15	2,733	0,907	3,649	5,927	0,079	0,424	0,424	568,3	0,081	0,036310345
Aerial Lifts	2005	16	25	Aerial Lifts_2005_25	5,948	1,558	3,804	5,978	0,064	0,474	0,474	568,299	0,14	0,062758621
Aerial Lifts	2005	26	50	Aerial Lifts_2005_50	18,56	2,717	6,122	6,139	0,065	0,657	0,657	568,299	0,245	0,109827586
Aerial Lifts	2005	51	120	Aerial Lifts_2005_120	17,765	1,34	3,898	8,079	0,059	0,651	0,651	568,299	0,12	0,053793103
Aerial Lifts	2005	251	500	Aerial Lifts_2005_500	41,275	0,556	2,307	6,521	0,049	0,217	0,217	568,299	0,05	0,022413793
Aerial Lifts	2005	501	750	Aerial Lifts_2005_750	76,693	0,572	2,307	6,666	0,051	0,219	0,219	568,299	0,051	0,022862069
Aerial Lifts	2010	6	15	Aerial Lifts_2010_15	0,646663	0,543	3,62771	4,927	0,005	0,322	0,296	583,4159	0,17	0,076206897
Aerial Lifts	2010	16	25	Aerial Lifts_2010_25	0,646663	0,543	3,62771	4,927	0,005	0,322	0,296	583,4159	0,17	0,076206897
Aerial Lifts	2010	26	50	Aerial Lifts_2010_50	0,646663	0,543	3,62771	4,927	0,005	0,322	0,296	583,4159	0,17	0,076206897
Aerial Lifts	2010	51	120	Aerial Lifts_2010_120	0,478206	0,402	3,35167	5,13121	0,005	0,329	0,303	524,5713	0,153	0,068586207
Aerial Lifts	2010	251	500	Aerial Lifts_2010_500	0,542967	0,456	1,70527	7,02372	0,005	0,22	0,202	524,505	0,153	0,068586207
Aerial Lifts	2010	501	750	Aerial Lifts_2010_750	54,853	0,409	1,535	5,216	0,005	0,16	0,16	568,299	0,036	0,016137931
Aerial Lifts	2011	6	15	Aerial Lifts_2011_15	0,492997	0,414	3,43961	4,84101	0,005	0,274	0,253	581,9574	0,17	0,076206897
Aerial Lifts	2011	16	25	Aerial Lifts_2011_25	0,492997	0,414	3,43961	4,84101	0,005	0,274	0,253	581,9574	0,17	0,076206897
Aerial Lifts	2011	26	50	Aerial Lifts_2011_50	0,492997	0,414	3,43961	4,84101	0,005	0,274	0,253	581,9574	0,17	0,076206897
Aerial Lifts	2011	51	120	Aerial Lifts_2011_120	0,406188	0,341	3,31532	4,72007	0,005	0,287	0,264	523,2599	0,153	0,068586207
Aerial Lifts	2011	251	500	Aerial Lifts_2011_500	0,547278	0,46	1,71344	7,05257	0,005	0,222	0,204	523,1938	0,153	0,068586207
Aerial Lifts	2011	501	750	Aerial Lifts_2011_750	50,06	0,373	1,402	4,839	0,005	0,144	0,144	568,299	0,033	0,014793103
Aerial Lifts	2012	6	15	Aerial Lifts_2012_15	0,448839	0,377	3,41137	4,66755	0,005	0,247	0,227	580,4989	0,17	0,076206897
Aerial Lifts	2012	16	25	Aerial Lifts_2012_25	0,448839	0,377	3,41137	4,66755	0,005	0,247	0,227	580,4989	0,17	0,076206897
Aerial Lifts	2012	26	50	Aerial Lifts_2012_50	0,448839	0,377	3,41137	4,66755	0,005	0,247	0,227	580,4989	0,17	0,076206897
Aerial Lifts	2012	51	120	Aerial Lifts_2012_120	0,348327	0,293	3,28979	4,38748	0,005	0,251	0,231	521,9485	0,153	0,068586207
Aerial Lifts	2012	251	500	Aerial Lifts_2012_500	0,551589	0,463	1,72161	7,08141	0,005	0,225	0,207	521,8825	0,153	0,068586207
Aerial Lifts	2012	501	750	Aerial Lifts_2012_750	46,364	0,346	1,307	4,488	0,005	0,131	0,131	568,299	0,031	0,013896552
Aerial Lifts	2013	6	15	Aerial Lifts_2013_15	0,365114	0,307	3,29997	4,33199	0,005	0,196	0,18	577,5818	0,17	0,076206897
Aerial Lifts	2013	16	25	Aerial Lifts_2013_25	0,365114	0,307	3,29997	4,33199	0,005	0,196	0,18	577,5818	0,17	0,076206897
Aerial Lifts	2013	26	50	Aerial Lifts_2013_50	0,365114	0,307	3,29997	4,33199	0,005	0,196	0,18	577,5818	0,17	0,076206897
Aerial Lifts	2013	51	120	Aerial Lifts_2013_120	0,288639	0,243	3,25075	3,92887	0,005	0,202	0,186	519,3256	0,153	0,068586207
Aerial Lifts	2013	251	500	Aerial Lifts_2013_500	0,277309	0,233	0,97787	4,58384	0,005	0,1	0,092	519,26	0,153	0,068586207
Aerial Lifts	2013	501	750	Aerial Lifts_2013_750	43,268	0,322	1,237	4,155	0,005	0,119	0,119	568,299	0,029	0,013
Aerial Lifts	2014	6	15	Aerial Lifts_2014_15	0,309966	0,26	3,23337	4,09559	0,005	0,158	0,145	574,6647	0,17	0,076206897
Aerial Lifts	2014	16	25	Aerial Lifts_2014_25	0,309966	0,26	3,23337	4,09559	0,005	0,158	0,145	574,6647	0,17	0,076206897
Aerial Lifts	2014	26	50	Aerial Lifts_2014_50	0,309966	0,26	3,23337	4,09559	0,005	0,158	0,145	574,6647	0,17	0,076206897
Aerial Lifts	2014	51	120	Aerial Lifts_2014_120	0,240786	0,202	3,2195	3,37278	0,005	0,161	0,148	516,7028	0,153	0,068586207
Aerial Lifts	2014	251	500	Aerial Lifts_2014_500	0,281092	0,236	0,98271	4,60231	0,005	0,101	0,093	516,6375	0,153	0,068586207
Aerial Lifts	2014	501	750	Aerial Lifts_2014_750	40,165	0,299	1,178	3,761	0,005	0,109	0,109	568,299	0,027	0,012103448
Aerial Lifts	2015	6	15	Aerial Lifts_2015_15	0,295589	0,248	3,23342	3,93284	0,005	0,136	0,125	568,8305	0,17	0,076206897
Aerial Lifts	2015	16	25	Aerial Lifts_2015_25	0,295589	0,248	3,23342	3,93284	0,005	0,136	0,125	568,8305	0,17	0,076206897
Aerial Lifts	2015	26	50	Aerial Lifts_2015_50	0,295589	0,248	3,23342	3,93284	0,005	0,136	0,125	568,8305	0,17	0,076206897
Aerial Lifts	2015	51	120	Aerial Lifts_2015_120	0,226785	0,191	3,21782	3,1134	0,005	0,143	0,132	511,457	0,153	0,068586207
Aerial Lifts	2015	251	500	Aerial Lifts_2015_500	0,284874	0,239	0,98755	4,62077	0,005	0,102	0,094	511,3924	0,153	0,068586207
Aerial Lifts	2015	501	750	Aerial Lifts_2015_750	37,246	0,278	1,13	3,38	0,005	0,098	0,098	568,299	0,025	0,011206897
Aerial Lifts	2016	6	15	Aerial Lifts_2016_15	0,271111	0,228	3,19737	3,67571	0,005	0,105	0,096	562,9964	0,17	0,076206897
Aerial Lifts	2016	16	25	Aerial Lifts_2016_25	0,271111	0,228	3,19737	3,67571	0,005	0,105	0,096	562,9964	0,17	0,076206897
Aerial Lifts	2016	26	50	Aerial Lifts_2016_50	0,271111	0,228	3,19737	3,67571	0,005	0,105	0,096	562,9964	0,17	0,076206897
Aerial Lifts	2016	51	120	Aerial Lifts_2016_120	0,196986	0,166	3,20103	2,72218	0,005	0,112	0,103	506,2113	0,153	0,068586207
Aerial Lifts	2016	251	500	Aerial Lifts_2016_500	0,288656	0,243	0,99238	4,63924	0,005	0,103	0,095	506,1474	0,153	0,068586207
Aerial Lifts	2016	501	750	Aerial Lifts_2016_750	34,529	0,257	1,089	3,015	0,005	0,088	0,088	568,299	0,023	0,010310345
Aerial Lifts	2017	6	15	Aerial Lifts_2017_15	0,248829	0,209	3,16913	3,46956	0,005	0,079	0,073	554,2451	0,17	0,076206897
Aerial Lifts	2017	16	25	Aerial Lifts_2017_25	0,248829	0,209	3,16913	3,46956	0,005	0,079	0,073	554,2451	0,17	0,076206897
Aerial Lifts	2017	26	50	Aerial Lifts_2017_50	0,248829	0,209	3,16913	3,46956	0,005	0,079	0,073	554,2451	0,17	0,076206897
Aerial Lifts	2017	51	120	Aerial Lifts_2017_120	0,169799	0,143	3,18429	2,36368	0,005	0,083	0,077	498,3428	0,153	0,068586207

Aerial Lifts	2017	251	500	Aerial Lifts_2017_500	0,292438	0,246	0,99722	4,6577	0,005	0,105	0,096	498,2798	0,153	0,068586207
Aerial Lifts	2017	501	750	Aerial Lifts_2017_750	32,148	0,239	1,059	2,68	0,005	0,079	0,079	568,299	0,021	0,009413793
Aerial Lifts	2018	6	15	Aerial Lifts_2018_15	0,216292	0,182	3,11639	3,2101	0,005	0,054	0,05	545,4939	0,17	0,076206897
Aerial Lifts	2018	16	25	Aerial Lifts_2018_25	0,216292	0,182	3,11639	3,2101	0,005	0,054	0,05	545,4939	0,17	0,076206897
Aerial Lifts	2018	26	50	Aerial Lifts_2018_50	0,216292	0,182	3,11639	3,2101	0,005	0,054	0,05	545,4939	0,17	0,076206897
Aerial Lifts	2018	51	120	Aerial Lifts_2018_120	0,145088	0,122	3,16685	2,0636	0,005	0,057	0,052	490,4742	0,153	0,068586207
Aerial Lifts	2018	251	500	Aerial Lifts_2018_500	0,074117	0,062	0,93655	0,63368	0,005	0,009	0,008	490,4122	0,153	0,068586207
Aerial Lifts	2018	501	750	Aerial Lifts_2018_750	30,169	0,225	1,037	2,385	0,005	0,071	0,071	568,299	0,02	0,008965517
Aerial Lifts	2019	6	15	Aerial Lifts_2019_15	0,204518	0,172	3,11451	3,07945	0,005	0,042	0,038	536,7427	0,17	0,076206897
Aerial Lifts	2019	16	25	Aerial Lifts_2019_25	0,204518	0,172	3,11451	3,07945	0,005	0,042	0,038	536,7427	0,17	0,076206897
Aerial Lifts	2019	26	50	Aerial Lifts_2019_50	0,204518	0,172	3,11451	3,07945	0,005	0,042	0,038	536,7427	0,17	0,076206897
Aerial Lifts	2019	51	120	Aerial Lifts_2019_120	0,14071	0,118	3,17254	1,97658	0,005	0,049	0,045	482,6056	0,153	0,068586207
Aerial Lifts	2019	251	500	Aerial Lifts_2019_500	0,077988	0,066	0,94139	0,63586	0,005	0,009	0,008	482,5446	0,153	0,068586207
Aerial Lifts	2019	501	750	Aerial Lifts_2019_750	28,429	0,212	1,023	2,117	0,005	0,064	0,064	568,299	0,019	0,008517241
Aerial Lifts	2020	6	15	Aerial Lifts_2020_15	0,199447	0,168	3,09942	2,95486	0,005	0,031	0,028	525,0743	0,17	0,076206897
Aerial Lifts	2020	16	25	Aerial Lifts_2020_25	0,199447	0,168	3,09942	2,95486	0,005	0,031	0,028	525,0743	0,17	0,076206897
Aerial Lifts	2020	26	50	Aerial Lifts_2020_50	0,199447	0,168	3,09942	2,95486	0,005	0,031	0,028	525,0743	0,17	0,076206897
Aerial Lifts	2020	51	120	Aerial Lifts_2020_120	0,136778	0,115	3,1768	1,86859	0,005	0,042	0,038	472,1142	0,153	0,068586207
Aerial Lifts	2020	251	500	Aerial Lifts_2020_500	0,081859	0,069	0,94623	0,63803	0,005	0,009	0,008	472,0545	0,153	0,068586207
Aerial Lifts	2020	501	750	Aerial Lifts_2020_750	26,846	0,2	1,013	1,868	0,005	0,057	0,057	568,299	0,018	0,008068966
Aerial Lifts	2021	6	15	Aerial Lifts_2021_15	0,196174	0,165	3,11369	2,92238	0,005	0,027	0,024	525,0743	0,17	0,076206897
Aerial Lifts	2021	16	25	Aerial Lifts_2021_25	0,196174	0,165	3,11369	2,92238	0,005	0,027	0,024	525,0743	0,17	0,076206897
Aerial Lifts	2021	26	50	Aerial Lifts_2021_50	0,196174	0,165	3,11369	2,92238	0,005	0,027	0,024	525,0743	0,17	0,076206897
Aerial Lifts	2021	51	120	Aerial Lifts_2021_120	0,129509	0,109	3,17624	1,74368	0,005	0,033	0,031	472,1142	0,153	0,068586207
Aerial Lifts	2021	251	500	Aerial Lifts_2021_500	0,08573	0,072	0,95107	0,64021	0,005	0,009	0,008	472,0545	0,153	0,068586207
Aerial Lifts	2021	501	750	Aerial Lifts_2021_750	25,065	0,187	1,004	1,61	0,005	0,05	0,05	568,299	0,016	0,007172414
Aerial Lifts	2022	6	15	Aerial Lifts_2022_15	0,192664	0,162	3,11231	2,90676	0,005	0,024	0,022	525,0743	0,17	0,076206897
Aerial Lifts	2022	16	25	Aerial Lifts_2022_25	0,192664	0,162	3,11231	2,90676	0,005	0,024	0,022	525,0743	0,17	0,076206897
Aerial Lifts	2022	26	50	Aerial Lifts_2022_50	0,192664	0,162	3,11231	2,90676	0,005	0,024	0,022	525,0743	0,17	0,076206897
Aerial Lifts	2022	51	120	Aerial Lifts_2022_120	0,124613	0,105	3,17602	1,62659	0,005	0,03	0,028	472,1142	0,153	0,068586207
Aerial Lifts	2022	251	500	Aerial Lifts_2022_500	0,089601	0,075	0,95591	0,64238	0,005	0,009	0,008	472,0545	0,153	0,068586207
Aerial Lifts	2022	501	750	Aerial Lifts_2022_750	23,788	0,177	0,998	1,424	0,005	0,044	0,044	568,299	0,016	0,007172414
Aerial Lifts	2023	6	15	Aerial Lifts_2023_15	0,19346	0,163	3,12196	2,89722	0,005	0,023	0,021	525,0743	0,17	0,076206897
Aerial Lifts	2023	16	25	Aerial Lifts_2023_25	0,19346	0,163	3,12196	2,89722	0,005	0,023	0,021	525,0743	0,17	0,076206897
Aerial Lifts	2023	26	50	Aerial Lifts_2023_50	0,19346	0,163	3,12196	2,89722	0,005	0,023	0,021	525,0743	0,17	0,076206897
Aerial Lifts	2023	51	120	Aerial Lifts_2023_120	0,119594	0,1	3,17029	1,5481	0,005	0,027	0,025	472,1142	0,153	0,068586207
Aerial Lifts	2023	251	500	Aerial Lifts_2023_500	0,093472	0,079	0,96074	0,64456	0,005	0,009	0,008	472,0545	0,153	0,068586207
Aerial Lifts	2023	501	750	Aerial Lifts_2023_750	22,675	0,169	0,995	1,265	0,005	0,038	0,038	568,299	0,015	0,006724138
Aerial Lifts	2024	6	15	Aerial Lifts_2024_15	0,188737	0,159	3,11285	2,88821	0,005	0,022	0,02	525,0743	0,17	0,076206897
Aerial Lifts	2024	16	25	Aerial Lifts_2024_25	0,188737	0,159	3,11285	2,88821	0,005	0,022	0,02	525,0743	0,17	0,076206897
Aerial Lifts	2024	26	50	Aerial Lifts_2024_50	0,188737	0,159	3,11285	2,88821	0,005	0,022	0,02	525,0743	0,17	0,076206897
Aerial Lifts	2024	51	120	Aerial Lifts_2024_120	0,119572	0,1	3,17255	1,52789	0,005	0,026	0,024	472,1142	0,153	0,068586207
Aerial Lifts	2024	251	500	Aerial Lifts_2024_500	0,097343	0,082	0,96558	0,64674	0,005	0,009	0,009	472,0545	0,153	0,068586207
Aerial Lifts	2024	501	750	Aerial Lifts_2024_750	21,618	0,161	0,991	1,115	0,005	0,033	0,033	568,299	0,014	0,006275862
Aerial Lifts	2025	6	15	Aerial Lifts_2025_15	0,182854	0,154	3,08837	2,87882	0,005	0,021	0,019	525,0743	0,17	0,076206897
Aerial Lifts	2025	16	25	Aerial Lifts_2025_25	0,182854	0,154	3,08837	2,87882	0,005	0,021	0,019	525,0743	0,17	0,076206897
Aerial Lifts	2025	26	50	Aerial Lifts_2025_50	0,182854	0,154	3,08837	2,87882	0,005	0,021	0,019	525,0743	0,17	0,076206897
Aerial Lifts	2025	51	120	Aerial Lifts_2025_120	0,117586	0,099	3,16742	1,51077	0,005	0,026	0,024	472,1142	0,153	0,068586207
Aerial Lifts	2025	251	500	Aerial Lifts_2025_500	0,101214	0,085	0,97042	0,64891	0,005	0,009	0,009	472,0545	0,153	0,068586207
Aerial Lifts	2025	501	750	Aerial Lifts_2025_750	20,597	0,153	0,989	0,974	0,005	0,028	0,028	568,299	0,013	0,005827586
Aerial Lifts	2030	6	15	Aerial Lifts_2030_15	1,993	0,661	3,469	4,142	0,008	0,161	0,161	568,299	0,059	0,026448276
Aerial Lifts	2030	16	25	Aerial Lifts_2030_25	2,616	0,685	2,339	4,332	0,007	0,162	0,162	568,299	0,061	0,027344828
Aerial Lifts	2030	26	50	Aerial Lifts_2030_50	2,317	0,339	3,764	3,135	0,007	0,04	0,04	568,3	0,03	0,013448276
Aerial Lifts	2030	51	120	Aerial Lifts_2030_120	2,504	0,188	3,352	1,657	0,006	0,036	0,036	568,299	0,017	0,00762069
Aerial Lifts	2030	251	500	Aerial Lifts_2030_500	9,37	0,126	0,986	0,479	0,005	0,016	0,016	568,299	0,011	0,004931034
Aerial Lifts	2030	501	750	Aerial Lifts_2030_750	16,962	0,126	0,986	0,485	0,005	0,016	0,016	568,299	0,011	0,004931034
Aerial Lifts	2035	6	15	Aerial Lifts_2035_15	1,993	0,661	3,469	4,142	0,008	0,161	0,161	568,299	0,059	0,026448276
Aerial Lifts	2035	16	25	Aerial Lifts_2035_25	2,616	0,685	2,339	4,332	0,007	0,161	0,161	568,299	0,061	0,027344828
Aerial Lifts	2035	26	50	Aerial Lifts_2035_50	2,033	0,297	3,726	3,017	0,007	0,019	0,019	568,299	0,026	0,011655172
Aerial Lifts	2035	51	120	Aerial Lifts_2035_120	2,202	0,166	3,345	1,466	0,006	0,017	0,017	568,299	0,014	0,006275862
Aerial Lifts	2035	251	500	Aerial Lifts_2035_500	8,659	0,116	0,986	0,33	0,005	0,011	0,011	568,299	0,01	0,004482759
Aerial Lifts	2035	501	750	Aerial Lifts_2035_750	15,653	0,116	0,986	0,33	0,005	0,011	0,011	568,299	0,01	0,004482759
Aerial Lifts	2040	6	15	Aerial Lifts_2040_15	1,993	0,661	3,469	4,142	0,008	0,161	0,161	568,299	0,059	0,026448276
Aerial Lifts	2040	16	25	Aerial Lifts_2040_25	2,616	0,685	2,339	4,332	0,007	0,161	0,161	568,299	0,061	0,027344828
Aerial Lifts	2040	26	50	Aerial Lifts_2040_50	2,015	0,295	3,723	2,966	0,007	0,013	0,013	568,299	0,026	0,011655172
Aerial Lifts	2040	51	120	Aerial Lifts_2040_120	2,141	0,161	3,344	1,407	0,006	0,012	0,012	568,299	0,014	0,006275862
Aerial Lifts	2040	251	500	Aerial Lifts_2040_500	8,324	0,112	0,986	0,279	0,005	0,009	0,009	568,299	0,01	0,004482759
Aerial Lifts	2040	501	750	Aerial Lifts_2040_750	15,046	0,112	0,986	0,279	0,005	0,009	0,009	568,299	0,01	0,004482759
Air Compressors	1990	6	15	Air Compressors_1990_15	4,702	1,804	4,999	9,999	1,018	0,974	0,974	568,299	0,162	0,07262069
Air Compressors	1990	16	25	Air Compressors_1990_25	11,537	2,213	4,999	6,919	0,83	0,74	0,74	568,299	0,199	0,089206897
Air Compressors	1990	26	50	Air Compressors_1990_50	34,016	4,232	8,684	7,735	0,846	1,152	1,152	568,3	0,381	0,170793103

Air Compressors	1990	51	120	Air Compressors_1990_120	37,275	2,2	5,46	14,348	0,768	1,216	1,216	568,299	0,198	0,088758621
Air Compressors	1990	121	175	Air Compressors_1990_175	48,032	1,504	4,835	12,906	0,736	0,806	0,806	568,299	0,135	0,060517241
Air Compressors	1990	176	250	Air Compressors_1990_250	71,231	1,504	4,835	12,906	0,736	0,806	0,806	568,299	0,135	0,060517241
Air Compressors	1990	251	500	Air Compressors_1990_500	112,803	1,348	9,633	12,363	0,642	0,704	0,704	568,299	0,121	0,054241379
Air Compressors	1990	501	750	Air Compressors_1990_750	174,334	1,348	9,633	12,363	0,658	0,704	0,704	568,299	0,121	0,054241379
Air Compressors	1990	751	1000	Air Compressors_1990_1000	235,953	1,344	9,633	12,363	0,658	0,699	0,699	568,3	0,121	0,054241379
Air Compressors	2000	6	15	Air Compressors_2000_15	4,493	1,723	4,875	9,08	0,079	0,747	0,747	568,299	0,155	0,069482759
Air Compressors	2000	16	25	Air Compressors_2000_25	10,924	2,095	4,783	6,405	0,065	0,569	0,569	568,299	0,189	0,084724138
Air Compressors	2000	26	50	Air Compressors_2000_50	31,858	3,963	8,261	6,902	0,066	0,851	0,851	568,299	0,357	0,160034483
Air Compressors	2000	51	120	Air Compressors_2000_120	30,02	1,771	4,544	10,276	0,06	0,835	0,835	568,3	0,159	0,071275862
Air Compressors	2000	121	175	Air Compressors_2000_175	37,86	1,185	3,7	9,332	0,057	0,494	0,494	568,299	0,106	0,047517241
Air Compressors	2000	176	250	Air Compressors_2000_250	47,101	0,994	2,949	8,985	0,057	0,406	0,406	568,299	0,089	0,039896552
Air Compressors	2000	251	500	Air Compressors_2000_500	76,009	0,908	5,008	8,611	0,05	0,36	0,36	568,299	0,082	0,036758621
Air Compressors	2000	501	750	Air Compressors_2000_750	117,469	0,908	5,008	8,611	0,051	0,36	0,36	568,299	0,082	0,036758621
Air Compressors	2000	751	1000	Air Compressors_2000_1000	176,359	1,004	5,6	9,212	0,051	0,379	0,379	568,299	0,09	0,040344828
Air Compressors	2005	6	15	Air Compressors_2005_15	3,634	1,394	4,38	7,817	0,079	0,621	0,621	568,299	0,125	0,056034483
Air Compressors	2005	16	25	Air Compressors_2005_25	8,461	1,622	3,922	6,014	0,065	0,483	0,483	568,299	0,146	0,065448276
Air Compressors	2005	26	50	Air Compressors_2005_50	28,493	3,545	7,671	6,447	0,066	0,792	0,792	568,299	0,319	0,143
Air Compressors	2005	51	120	Air Compressors_2005_120	25,731	1,518	4,196	8,646	0,06	0,775	0,775	568,299	0,137	0,061413793
Air Compressors	2005	121	175	Air Compressors_2005_175	31,762	0,994	3,339	7,911	0,057	0,428	0,428	568,299	0,089	0,039896552
Air Compressors	2005	176	250	Air Compressors_2005_250	33,701	0,711	1,989	7,465	0,057	0,281	0,281	568,299	0,064	0,028689655
Air Compressors	2005	251	500	Air Compressors_2005_500	52,734	0,63	2,602	6,868	0,05	0,252	0,252	568,299	0,056	0,025103448
Air Compressors	2005	501	750	Air Compressors_2005_750	83,252	0,644	2,602	7,019	0,051	0,255	0,255	568,299	0,058	0,026
Air Compressors	2005	751	1000	Air Compressors_2005_1000	135,834	0,773	3,154	8,036	0,051	0,271	0,271	568,299	0,069	0,030931034
Air Compressors	2010	6	15	Air Compressors_2010_15	2,931	1,124	4,027	6,554	0,008	0,473	0,473	568,299	0,101	0,045275862
Air Compressors	2010	16	25	Air Compressors_2010_25	6,607	1,267	3,309	5,477	0,007	0,384	0,384	568,299	0,114	0,051103448
Air Compressors	2010	26	50	Air Compressors_2010_50	23,546	2,929	7,121	6,067	0,007	0,669	0,669	568,299	0,264	0,118344828
Air Compressors	2010	51	120	Air Compressors_2010_120	20,566	1,213	4,044	7,183	0,006	0,653	0,653	568,299	0,109	0,048862069
Air Compressors	2010	121	175	Air Compressors_2010_175	25,827	0,808	3,277	6,422	0,006	0,361	0,361	568,299	0,072	0,032275862
Air Compressors	2010	176	250	Air Compressors_2010_250	24,871	0,525	1,468	6,008	0,006	0,198	0,198	568,299	0,047	0,021068966
Air Compressors	2010	251	500	Air Compressors_2010_500	39,447	0,471	1,648	5,363	0,005	0,182	0,182	568,299	0,042	0,018827586
Air Compressors	2010	501	750	Air Compressors_2010_750	62,011	0,479	1,648	5,507	0,005	0,185	0,185	568,299	0,043	0,019275862
Air Compressors	2010	751	1000	Air Compressors_2010_1000	105,623	0,601	2,147	6,994	0,005	0,209	0,209	568,299	0,054	0,024206897
Air Compressors	2011	6	15	Air Compressors_2011_15	2,782	1,067	3,952	6,283	0,008	0,441	0,441	568,299	0,096	0,043034483
Air Compressors	2011	16	25	Air Compressors_2011_25	6,215	1,192	3,179	5,36	0,007	0,361	0,361	568,299	0,107	0,047965517
Air Compressors	2011	26	50	Air Compressors_2011_50	22,03	2,741	6,919	5,972	0,007	0,636	0,636	568,299	0,247	0,110724138
Air Compressors	2011	51	120	Air Compressors_2011_120	19,321	1,14	4,005	6,805	0,006	0,626	0,626	568,299	0,102	0,045724138
Air Compressors	2011	121	175	Air Compressors_2011_175	24,432	0,765	3,264	6,065	0,006	0,347	0,347	568,299	0,069	0,030931034
Air Compressors	2011	176	250	Air Compressors_2011_250	22,999	0,485	1,372	5,603	0,006	0,177	0,177	568,299	0,043	0,019275862
Air Compressors	2011	251	500	Air Compressors_2011_500	36,661	0,438	1,497	4,981	0,005	0,165	0,165	568,299	0,039	0,017482759
Air Compressors	2011	501	750	Air Compressors_2011_750	57,58	0,445	1,497	5,123	0,005	0,167	0,167	568,299	0,04	0,017931034
Air Compressors	2011	751	1000	Air Compressors_2011_1000	98,738	0,562	1,971	6,637	0,005	0,196	0,196	568,299	0,05	0,022413793
Air Compressors	2012	6	15	Air Compressors_2012_15	2,626	1,007	3,874	5,999	0,008	0,407	0,407	568,299	0,09	0,040344828
Air Compressors	2012	16	25	Air Compressors_2012_25	5,803	1,113	3,043	5,239	0,007	0,337	0,337	568,299	0,1	0,044827586
Air Compressors	2012	26	50	Air Compressors_2012_50	20,318	2,527	6,682	5,869	0,007	0,6	0,6	568,299	0,228	0,102206897
Air Compressors	2012	51	120	Air Compressors_2012_120	17,991	1,061	3,964	6,39	0,006	0,587	0,587	568,299	0,095	0,042586207
Air Compressors	2012	121	175	Air Compressors_2012_175	22,92	0,717	3,251	5,684	0,006	0,324	0,324	568,299	0,064	0,028689655
Air Compressors	2012	176	250	Air Compressors_2012_250	21,576	0,455	1,312	5,216	0,006	0,161	0,161	568,299	0,041	0,01837931
Air Compressors	2012	251	500	Air Compressors_2012_500	34,608	0,413	1,392	4,618	0,005	0,15	0,15	568,299	0,037	0,016586207
Air Compressors	2012	501	750	Air Compressors_2012_750	54,283	0,419	1,392	4,758	0,005	0,153	0,153	568,299	0,037	0,016586207
Air Compressors	2012	751	1000	Air Compressors_2012_1000	91,671	0,522	1,8	6,263	0,005	0,183	0,183	568,299	0,047	0,021068966
Air Compressors	2013	6	15	Air Compressors_2013_15	2,471	0,948	3,796	5,716	0,008	0,373	0,373	568,299	0,085	0,038103448
Air Compressors	2013	16	25	Air Compressors_2013_25	5,393	1,034	2,907	5,117	0,007	0,314	0,314	568,299	0,093	0,041689655
Air Compressors	2013	26	50	Air Compressors_2013_50	18,508	2,302	6,43	5,643	0,007	0,553	0,553	568,299	0,207	0,092793103
Air Compressors	2013	51	120	Air Compressors_2013_120	16,632	0,981	3,921	5,978	0,006	0,543	0,543	568,299	0,088	0,039448276
Air Compressors	2013	121	175	Air Compressors_2013_175	21,377	0,669	3,238	5,321	0,006	0,298	0,298	568,299	0,06	0,026896552
Air Compressors	2013	176	250	Air Compressors_2013_250	20,386	0,43	1,271	4,839	0,006	0,147	0,147	568,299	0,038	0,017034483
Air Compressors	2013	251	500	Air Compressors_2013_500	32,936	0,393	1,313	4,268	0,005	0,137	0,137	568,3	0,035	0,015689655
Air Compressors	2013	501	750	Air Compressors_2013_750	51,584	0,399	1,313	4,406	0,005	0,14	0,14	568,299	0,036	0,016137931
Air Compressors	2013	751	1000	Air Compressors_2013_1000	84,725	0,482	1,639	5,883	0,005	0,17	0,17	568,299	0,043	0,019275862
Air Compressors	2014	6	15	Air Compressors_2014_15	2,324	0,891	3,723	5,445	0,008	0,341	0,341	568,3	0,08	0,035862069
Air Compressors	2014	16	25	Air Compressors_2014_25	5,008	0,96	2,78	5	0,007	0,291	0,291	568,299	0,086	0,038551724
Air Compressors	2014	26	50	Air Compressors_2014_50	16,691	2,076	6,181	5,421	0,007	0,505	0,505	568,299	0,187	0,083827586
Air Compressors	2014	51	120	Air Compressors_2014_120	15,28	0,901	3,88	5,608	0,006	0,495	0,495	568,299	0,081	0,036310345
Air Compressors	2014	121	175	Air Compressors_2014_175	19,856	0,621	3,227	4,973	0,006	0,272	0,272	568,299	0,056	0,025103448
Air Compressors	2014	176	250	Air Compressors_2014_250	19,194	0,405	1,237	4,399	0,006	0,134	0,134	568,299	0,036	0,016137931
Air Compressors	2014	251	500	Air Compressors_2014_500	31,25	0,373	1,249	3,855	0,005	0,125	0,125	568,299	0,033	0,014793103
Air Compressors	2014	501	750	Air Compressors_2014_750	48,868	0,378	1,249	3,991	0,005	0,128	0,128	568,299	0,034	0,015241379
Air Compressors	2014	751	1000	Air Compressors_2014_1000	78,19	0,445	1,493	5,512	0,005	0,157	0,157	568,3	0,04	0,017931034
Air Compressors	2015	6	15	Air Compressors_2015_15	2,191	0,84	3,658	5,196	0,008	0,311	0,311	568,299	0,075	0,03362069
Air Compressors	2015	16	25	Air Compressors_2015_25	4,662	0,894	2,666	4,89	0,007	0,27	0,27	568,299	0,08	0,035862069

Air Compressors	2015	26	50	Air Compressors_2015_50	15,015	1,868	5,968	5,223	0,007	0,459	0,459	568,299	0,168	0,075310345
Air Compressors	2015	51	120	Air Compressors_2015_120	13,925	0,821	3,84	5,19	0,006	0,446	0,446	568,299	0,074	0,033172414
Air Compressors	2015	121	175	Air Compressors_2015_175	18,243	0,571	3,218	4,504	0,006	0,245	0,245	568,299	0,051	0,022862069
Air Compressors	2015	176	250	Air Compressors_2015_250	18,067	0,381	1,207	3,967	0,006	0,121	0,121	568,299	0,034	0,015241379
Air Compressors	2015	251	500	Air Compressors_2015_500	29,662	0,354	1,198	3,455	0,005	0,113	0,113	568,3	0,032	0,014344828
Air Compressors	2015	501	750	Air Compressors_2015_750	46,316	0,358	1,198	3,586	0,005	0,116	0,116	568,299	0,032	0,014344828
Air Compressors	2015	751	1000	Air Compressors_2015_1000	71,885	0,409	1,37	5,157	0,005	0,142	0,142	568,299	0,036	0,016137931
Air Compressors	2016	6	15	Air Compressors_2016_15	2,109	0,809	3,622	5,023	0,008	0,289	0,289	568,299	0,073	0,032724138
Air Compressors	2016	16	25	Air Compressors_2016_25	4,462	0,855	2,604	4,803	0,007	0,255	0,255	568,299	0,077	0,034517241
Air Compressors	2016	26	50	Air Compressors_2016_50	13,429	1,67	5,779	5,042	0,007	0,415	0,415	568,299	0,15	0,067241379
Air Compressors	2016	51	120	Air Compressors_2016_120	12,618	0,744	3,804	4,79	0,006	0,397	0,397	568,299	0,067	0,030034483
Air Compressors	2016	121	175	Air Compressors_2016_175	16,69	0,522	3,211	4,052	0,006	0,219	0,219	568,299	0,047	0,021068966
Air Compressors	2016	176	250	Air Compressors_2016_250	17,023	0,359	1,182	3,553	0,006	0,109	0,109	568,299	0,032	0,014344828
Air Compressors	2016	251	500	Air Compressors_2016_500	28,188	0,337	1,155	3,08	0,005	0,102	0,102	568,299	0,03	0,013448276
Air Compressors	2016	501	750	Air Compressors_2016_750	43,972	0,34	1,155	3,201	0,005	0,104	0,104	568,299	0,03	0,013448276
Air Compressors	2016	751	1000	Air Compressors_2016_1000	67,278	0,383	1,295	4,854	0,005	0,131	0,131	568,299	0,034	0,015241379
Air Compressors	2017	6	15	Air Compressors_2017_15	2,05	0,786	3,599	4,887	0,008	0,272	0,272	568,299	0,07	0,03137931
Air Compressors	2017	16	25	Air Compressors_2017_25	4,327	0,83	2,564	4,729	0,007	0,243	0,243	568,299	0,074	0,033172414
Air Compressors	2017	26	50	Air Compressors_2017_50	11,908	1,481	5,604	4,871	0,007	0,371	0,371	568,299	0,133	0,05962069
Air Compressors	2017	51	120	Air Compressors_2017_120	11,385	0,671	3,772	4,412	0,006	0,35	0,35	568,299	0,06	0,026896552
Air Compressors	2017	121	175	Air Compressors_2017_175	15,244	0,477	3,207	3,627	0,006	0,194	0,194	568,299	0,043	0,019275862
Air Compressors	2017	176	250	Air Compressors_2017_250	16,09	0,339	1,162	3,163	0,006	0,098	0,098	568,299	0,03	0,013448276
Air Compressors	2017	251	500	Air Compressors_2017_500	26,901	0,321	1,123	2,755	0,005	0,092	0,092	568,299	0,029	0,013
Air Compressors	2017	501	750	Air Compressors_2017_750	41,87	0,323	1,123	2,845	0,005	0,094	0,094	568,299	0,029	0,013
Air Compressors	2017	751	1000	Air Compressors_2017_1000	63,572	0,362	1,246	4,583	0,005	0,121	0,121	568,299	0,032	0,014344828
Air Compressors	2018	6	15	Air Compressors_2018_15	1,998	0,766	3,58	4,762	0,008	0,256	0,256	568,299	0,069	0,030931034
Air Compressors	2018	16	25	Air Compressors_2018_25	4,211	0,807	2,531	4,661	0,007	0,232	0,232	568,3	0,072	0,032275862
Air Compressors	2018	26	50	Air Compressors_2018_50	10,449	1,3	5,439	4,707	0,007	0,329	0,329	568,299	0,117	0,052448276
Air Compressors	2018	51	120	Air Compressors_2018_120	10,218	0,603	3,744	4,05	0,006	0,304	0,304	568,3	0,054	0,024206897
Air Compressors	2018	121	175	Air Compressors_2018_175	13,906	0,435	3,205	3,228	0,006	0,17	0,17	568,299	0,039	0,017482759
Air Compressors	2018	176	250	Air Compressors_2018_250	15,223	0,321	1,146	2,797	0,006	0,087	0,087	568,3	0,029	0,013
Air Compressors	2018	251	500	Air Compressors_2018_500	25,723	0,307	1,101	2,465	0,005	0,083	0,083	568,299	0,027	0,012103448
Air Compressors	2018	501	750	Air Compressors_2018_750	39,953	0,309	1,101	2,533	0,005	0,084	0,084	568,299	0,027	0,012103448
Air Compressors	2018	751	1000	Air Compressors_2018_1000	60,205	0,343	1,21	4,325	0,005	0,111	0,111	568,299	0,03	0,013448276
Air Compressors	2019	6	15	Air Compressors_2019_15	1,951	0,748	3,562	4,647	0,008	0,241	0,241	568,299	0,067	0,030034483
Air Compressors	2019	16	25	Air Compressors_2019_25	4,106	0,787	2,501	4,596	0,007	0,222	0,222	568,299	0,071	0,031827586
Air Compressors	2019	26	50	Air Compressors_2019_50	9,076	1,129	5,283	4,546	0,007	0,287	0,287	568,299	0,101	0,045275862
Air Compressors	2019	51	120	Air Compressors_2019_120	9,123	0,538	3,718	3,706	0,006	0,26	0,26	568,299	0,048	0,021517241
Air Compressors	2019	121	175	Air Compressors_2019_175	12,833	0,401	3,204	2,874	0,006	0,15	0,15	568,299	0,036	0,016137931
Air Compressors	2019	176	250	Air Compressors_2019_250	14,416	0,304	1,132	2,469	0,006	0,078	0,078	568,299	0,027	0,012103448
Air Compressors	2019	251	500	Air Compressors_2019_500	24,559	0,293	1,086	2,193	0,005	0,075	0,075	568,299	0,026	0,011655172
Air Compressors	2019	501	750	Air Compressors_2019_750	38,104	0,294	1,086	2,247	0,005	0,076	0,076	568,299	0,026	0,011655172
Air Compressors	2019	751	1000	Air Compressors_2019_1000	56,984	0,324	1,182	4,073	0,005	0,102	0,102	568,299	0,029	0,013
Air Compressors	2020	6	15	Air Compressors_2020_15	1,907	0,731	3,546	4,542	0,008	0,227	0,227	568,299	0,066	0,029586207
Air Compressors	2020	16	25	Air Compressors_2020_25	4,009	0,769	2,473	4,538	0,007	0,212	0,212	568,3	0,069	0,030931034
Air Compressors	2020	26	50	Air Compressors_2020_50	8,048	1,001	5,164	4,397	0,007	0,25	0,25	568,299	0,09	0,040344828
Air Compressors	2020	51	120	Air Compressors_2020_120	8,287	0,489	3,698	3,4	0,006	0,224	0,224	568,299	0,044	0,019724138
Air Compressors	2020	121	175	Air Compressors_2020_175	11,957	0,374	3,203	2,558	0,006	0,133	0,133	568,299	0,033	0,014793103
Air Compressors	2020	176	250	Air Compressors_2020_250	13,668	0,288	1,121	2,172	0,006	0,069	0,069	568,299	0,026	0,011655172
Air Compressors	2020	251	500	Air Compressors_2020_500	23,406	0,279	1,076	1,935	0,005	0,067	0,067	568,299	0,025	0,011206897
Air Compressors	2020	501	750	Air Compressors_2020_750	36,303	0,28	1,076	1,982	0,005	0,067	0,067	568,299	0,025	0,011206897
Air Compressors	2020	751	1000	Air Compressors_2020_1000	53,87	0,306	1,158	3,828	0,005	0,093	0,093	568,3	0,027	0,012103448
Air Compressors	2021	6	15	Air Compressors_2021_15	1,87	0,717	3,531	4,462	0,008	0,214	0,214	568,299	0,064	0,028689655
Air Compressors	2021	16	25	Air Compressors_2021_25	3,923	0,752	2,446	4,497	0,007	0,201	0,201	568,299	0,067	0,030034483
Air Compressors	2021	26	50	Air Compressors_2021_50	7,136	0,887	5,021	4,221	0,007	0,212	0,212	568,299	0,08	0,035862069
Air Compressors	2021	51	120	Air Compressors_2021_120	7,502	0,442	3,67	3,083	0,006	0,19	0,19	568,299	0,039	0,017482759
Air Compressors	2021	121	175	Air Compressors_2021_175	10,967	0,343	3,192	2,218	0,006	0,115	0,115	568,299	0,03	0,013448276
Air Compressors	2021	176	250	Air Compressors_2021_250	12,728	0,268	1,108	1,859	0,006	0,06	0,06	568,299	0,024	0,010758621
Air Compressors	2021	251	500	Air Compressors_2021_500	21,887	0,261	1,064	1,663	0,005	0,058	0,058	568,299	0,023	0,010310345
Air Compressors	2021	501	750	Air Compressors_2021_750	33,933	0,262	1,064	1,699	0,005	0,058	0,058	568,299	0,023	0,010310345
Air Compressors	2021	751	1000	Air Compressors_2021_1000	49,951	0,284	1,134	3,565	0,005	0,082	0,082	568,3	0,025	0,011206897
Air Compressors	2022	6	15	Air Compressors_2022_15	1,844	0,707	3,519	4,408	0,008	0,203	0,203	568,299	0,063	0,028241379
Air Compressors	2022	16	25	Air Compressors_2022_25	3,857	0,739	2,426	4,47	0,007	0,193	0,193	568,299	0,066	0,029586207
Air Compressors	2022	26	50	Air Compressors_2022_50	6,549	0,814	4,959	4,093	0,007	0,183	0,183	568,299	0,073	0,032724138
Air Compressors	2022	51	120	Air Compressors_2022_120	7,001	0,413	3,662	2,844	0,006	0,165	0,165	568,299	0,037	0,016586207
Air Compressors	2022	121	175	Air Compressors_2022_175	10,29	0,322	3,194	1,959	0,006	0,101	0,101	568,299	0,029	0,013
Air Compressors	2022	176	250	Air Compressors_2022_250	12,099	0,255	1,102	1,617	0,006	0,052	0,052	568,3	0,023	0,010310345
Air Compressors	2022	251	500	Air Compressors_2022_500	20,881	0,249	1,059	1,472	0,005	0,051	0,051	568,299	0,022	0,009862069
Air Compressors	2022	501	750	Air Compressors_2022_750	32,363	0,25	1,059	1,502	0,005	0,051	0,051	568,299	0,022	0,009862069
Air Compressors	2022	751	1000	Air Compressors_2022_1000	47,338	0,269	1,117	3,378	0,005	0,075	0,075	568,3	0,024	0,010758621

Air Compressors	2023	6	15	Air Compressors_2023_15	1,82	0,698	3,508	4,359	0,008	0,194	0,194	568,299	0,063	0,028241379
Air Compressors	2023	16	25	Air Compressors_2023_25	3,798	0,728	2,407	4,447	0,007	0,186	0,186	568,299	0,065	0,029137931
Air Compressors	2023	26	50	Air Compressors_2023_50	6,056	0,753	4,913	3,975	0,007	0,156	0,156	568,299	0,067	0,030034483
Air Compressors	2023	51	120	Air Compressors_2023_120	6,568	0,387	3,657	2,631	0,006	0,143	0,143	568,299	0,034	0,015241379
Air Compressors	2023	121	175	Air Compressors_2023_175	9,693	0,303	3,197	1,748	0,006	0,089	0,089	568,299	0,027	0,012103448
Air Compressors	2023	176	250	Air Compressors_2023_250	11,532	0,243	1,099	1,42	0,006	0,045	0,045	568,299	0,021	0,009413793
Air Compressors	2023	251	500	Air Compressors_2023_500	19,964	0,238	1,055	1,305	0,005	0,044	0,044	568,299	0,021	0,009413793
Air Compressors	2023	501	750	Air Compressors_2023_750	30,933	0,239	1,055	1,331	0,005	0,044	0,044	568,299	0,021	0,009413793
Air Compressors	2023	751	1000	Air Compressors_2023_1000	44,985	0,256	1,102	3,221	0,005	0,068	0,068	568,299	0,023	0,010310345
Air Compressors	2024	6	15	Air Compressors_2024_15	1,799	0,69	3,499	4,316	0,008	0,188	0,188	568,3	0,062	0,027793103
Air Compressors	2024	16	25	Air Compressors_2024_25	3,746	0,718	2,39	4,426	0,007	0,181	0,181	568,3	0,064	0,028689655
Air Compressors	2024	26	50	Air Compressors_2024_50	5,647	0,702	4,88	3,864	0,007	0,135	0,135	568,299	0,063	0,028241379
Air Compressors	2024	51	120	Air Compressors_2024_120	6,194	0,365	3,655	2,461	0,006	0,123	0,123	568,299	0,032	0,014344828
Air Compressors	2024	121	175	Air Compressors_2024_175	9,143	0,286	3,202	1,561	0,006	0,077	0,077	568,299	0,025	0,011206897
Air Compressors	2024	176	250	Air Compressors_2024_250	10,986	0,232	1,096	1,247	0,006	0,039	0,039	568,299	0,02	0,008965517
Air Compressors	2024	251	500	Air Compressors_2024_500	19,07	0,228	1,053	1,148	0,005	0,038	0,038	568,299	0,02	0,008965517
Air Compressors	2024	501	750	Air Compressors_2024_750	29,542	0,228	1,053	1,171	0,005	0,038	0,038	568,299	0,02	0,008965517
Air Compressors	2024	751	1000	Air Compressors_2024_1000	42,762	0,243	1,09	3,082	0,005	0,061	0,061	568,299	0,021	0,009413793
Air Compressors	2025	6	15	Air Compressors_2025_15	1,781	0,683	3,491	4,278	0,008	0,183	0,183	568,3	0,061	0,027344828
Air Compressors	2025	16	25	Air Compressors_2025_25	3,701	0,709	2,376	4,407	0,007	0,177	0,177	568,299	0,064	0,028689655
Air Compressors	2025	26	50	Air Compressors_2025_50	5,297	0,659	4,851	3,755	0,007	0,116	0,116	568,299	0,059	0,026448276
Air Compressors	2025	51	120	Air Compressors_2025_120	5,855	0,345	3,653	2,313	0,006	0,104	0,104	568,299	0,031	0,013896552
Air Compressors	2025	121	175	Air Compressors_2025_175	8,602	0,269	3,205	1,383	0,006	0,065	0,065	568,299	0,024	0,010758621
Air Compressors	2025	176	250	Air Compressors_2025_250	10,451	0,22	1,094	1,086	0,006	0,033	0,033	568,299	0,019	0,008517241
Air Compressors	2025	251	500	Air Compressors_2025_500	18,188	0,217	1,051	1,001	0,005	0,032	0,032	568,299	0,019	0,008517241
Air Compressors	2025	501	750	Air Compressors_2025_750	28,169	0,217	1,051	1,021	0,005	0,032	0,032	568,299	0,019	0,008517241
Air Compressors	2025	751	1000	Air Compressors_2025_1000	40,592	0,231	1,079	2,954	0,005	0,055	0,055	568,299	0,02	0,008965517
Air Compressors	2030	6	15	Air Compressors_2030_15	1,73	0,663	3,47	4,164	0,008	0,166	0,166	568,299	0,059	0,026448276
Air Compressors	2030	16	25	Air Compressors_2030_25	3,582	0,687	2,34	4,347	0,007	0,165	0,165	568,299	0,061	0,027344828
Air Compressors	2030	26	50	Air Compressors_2030_50	4,073	0,506	4,712	3,34	0,007	0,046	0,046	568,299	0,045	0,020172414
Air Compressors	2030	51	120	Air Compressors_2030_120	4,485	0,264	3,63	1,729	0,006	0,041	0,041	568,299	0,023	0,010310345
Air Compressors	2030	121	175	Air Compressors_2030_175	6,186	0,193	3,205	0,633	0,006	0,027	0,027	568,299	0,017	0,00762069
Air Compressors	2030	176	250	Air Compressors_2030_250	8,495	0,179	1,092	0,529	0,006	0,018	0,018	568,299	0,016	0,007172414
Air Compressors	2030	251	500	Air Compressors_2030_500	14,937	0,178	1,048	0,499	0,005	0,017	0,017	568,299	0,016	0,007172414
Air Compressors	2030	501	750	Air Compressors_2030_750	23,104	0,178	1,048	0,505	0,005	0,017	0,017	568,3	0,016	0,007172414
Air Compressors	2030	751	1000	Air Compressors_2030_1000	32,103	0,182	1,049	2,6	0,005	0,033	0,033	568,299	0,016	0,007172414
Air Compressors	2035	6	15	Air Compressors_2035_15	1,724	0,661	3,469	4,143	0,008	0,162	0,162	568,3	0,059	0,026448276
Air Compressors	2035	16	25	Air Compressors_2035_25	3,574	0,685	2,339	4,332	0,007	0,162	0,162	568,299	0,061	0,027344828
Air Compressors	2035	26	50	Air Compressors_2035_50	3,722	0,463	4,674	3,215	0,007	0,023	0,023	568,299	0,041	0,01837931
Air Compressors	2035	51	120	Air Compressors_2035_120	4,047	0,238	3,623	1,53	0,006	0,02	0,02	568,299	0,021	0,009413793
Air Compressors	2035	121	175	Air Compressors_2035_175	5,429	0,17	3,205	0,391	0,006	0,015	0,015	568,3	0,015	0,006724138
Air Compressors	2035	176	250	Air Compressors_2035_250	7,862	0,166	1,091	0,347	0,006	0,012	0,012	568,299	0,014	0,006275862
Air Compressors	2035	251	500	Air Compressors_2035_500	13,882	0,166	1,048	0,343	0,005	0,012	0,012	568,299	0,014	0,006275862
Air Compressors	2035	501	750	Air Compressors_2035_750	21,455	0,166	1,048	0,344	0,005	0,012	0,012	568,299	0,014	0,006275862
Air Compressors	2035	751	1000	Air Compressors_2035_1000	29,363	0,167	1,048	2,473	0,005	0,026	0,026	568,299	0,015	0,006724138
Air Compressors	2040	6	15	Air Compressors_2040_15	1,724	0,661	3,469	4,142	0,008	0,161	0,161	568,299	0,059	0,026448276
Air Compressors	2040	16	25	Air Compressors_2040_25	3,574	0,685	2,339	4,332	0,007	0,161	0,161	568,3	0,061	0,027344828
Air Compressors	2040	26	50	Air Compressors_2040_50	3,683	0,458	4,659	3,159	0,007	0,016	0,016	568,3	0,041	0,01837931
Air Compressors	2040	51	120	Air Compressors_2040_120	3,94	0,232	3,619	1,468	0,006	0,015	0,015	568,299	0,02	0,008965517
Air Compressors	2040	121	175	Air Compressors_2040_175	5,155	0,161	3,201	0,307	0,006	0,012	0,012	568,299	0,014	0,006275862
Air Compressors	2040	176	250	Air Compressors_2040_250	7,58	0,16	1,09	0,291	0,006	0,01	0,01	568,299	0,014	0,006275862
Air Compressors	2040	251	500	Air Compressors_2040_500	13,386	0,16	1,047	0,291	0,005	0,01	0,01	568,3	0,014	0,006275862
Air Compressors	2040	501	750	Air Compressors_2040_750	20,688	0,16	1,047	0,291	0,005	0,01	0,01	568,299	0,014	0,006275862
Air Compressors	2040	751	1000	Air Compressors_2040_1000	28,179	0,16	1,047	2,439	0,005	0,023	0,023	568,299	0,014	0,006275862
Bore/Drill Rigs	1990	6	15	Bore/Drill Rigs_1990_15	4,968	1,804	4,999	9,999	1,049	0,975	0,975	568,299	0,162	0,07262069
Bore/Drill Rigs	1990	16	25	Bore/Drill Rigs_1990_25	9,418	2,213	4,999	6,919	0,855	0,741	0,741	568,299	0,199	0,089206897
Bore/Drill Rigs	1990	26	50	Bore/Drill Rigs_1990_50	34,076	4,124	8,505	7,685	0,871	1,134	1,134	568,299	0,372	0,166758621
Bore/Drill Rigs	1990	51	120	Bore/Drill Rigs_1990_120	42,911	2,09	5,23	13,647	0,791	1,172	1,172	568,299	0,188	0,084275862
Bore/Drill Rigs	1990	121	175	Bore/Drill Rigs_1990_175	53,24	1,417	4,578	12,365	0,758	0,749	0,749	568,299	0,127	0,056931034
Bore/Drill Rigs	1990	176	250	Bore/Drill Rigs_1990_250	70,987	1,417	4,578	12,365	0,758	0,749	0,749	568,299	0,127	0,056931034
Bore/Drill Rigs	1990	251	500	Bore/Drill Rigs_1990_500	105,966	1,278	8,788	11,861	0,662	0,658	0,658	568,299	0,115	0,051551724
Bore/Drill Rigs	1990	501	750	Bore/Drill Rigs_1990_750	209,372	1,278	8,788	11,861	1,018	0,67	0,67	568,3	0,115	0,051551724
Bore/Drill Rigs	1990	751	1000	Bore/Drill Rigs_1990_1000	313,129	1,267	8,788	11,861	1,018	0,656	0,656	568,3	0,114	0,051103448
Bore/Drill Rigs	2000	6	15	Bore/Drill Rigs_2000_15	4,063	1,475	4,49	8,242	0,079	0,676	0,676	568,299	0,133	0,05962069
Bore/Drill Rigs	2000	16	25	Bore/Drill Rigs_2000_25	8,334	1,958	4,53	6,358	0,065	0,563	0,563	568,299	0,176	0,078896552
Bore/Drill Rigs	2000	26	50	Bore/Drill Rigs_2000_50	27,226	3,295	7,058	6,48	0,066	0,748	0,748	568,299	0,297	0,133137931
Bore/Drill Rigs	2000	51	120	Bore/Drill Rigs_2000_120	30,002	1,461	3,947	8,27	0,06	0,726	0,726	568,299	0,131	0,058724138
Bore/Drill Rigs	2000	121	175	Bore/Drill Rigs_2000_175	37,634	1,002	3,062	7,789	0,057	0,405	0,405	568,3	0,09	0,040344828
Bore/Drill Rigs	2000	176	250	Bore/Drill Rigs_2000_250	32,523	0,649	1,698	7,203	0,057	0,238	0,238	568,3	0,058	0,026
Bore/Drill Rigs	2000	251	500	Bore/Drill Rigs_2000_500	51,06	0,616	1,728	6,993	0,05	0,224	0,224	568,299	0,055	0,024655172
Bore/Drill Rigs	2000	501	750	Bore/Drill Rigs_2000_750	100,887	0,616	1,728	6,993	0,052	0,224	0,224	568,299	0,055	0,024655172

Bore/Drill Rigs	2000	751	1000	Bore/Drill Rigs_2000_1000	199,748	0,808	2,73	8,005	0,052	0,282	0,282	568,299	0,072	0,032275862
Bore/Drill Rigs	2005	6	15	Bore/Drill Rigs_2005_15	2,109	0,766	3,469	5,228	0,079	0,361	0,361	568,299	0,069	0,030931034
Bore/Drill Rigs	2005	16	25	Bore/Drill Rigs_2005_25	3,913	0,919	2,642	5,412	0,065	0,347	0,347	568,299	0,082	0,036758621
Bore/Drill Rigs	2005	26	50	Bore/Drill Rigs_2005_50	20,086	2,431	5,897	5,697	0,066	0,625	0,625	568,299	0,219	0,098172414
Bore/Drill Rigs	2005	51	120	Bore/Drill Rigs_2005_120	24,211	1,179	3,812	6,895	0,06	0,64	0,64	568,3	0,106	0,047517241
Bore/Drill Rigs	2005	121	175	Bore/Drill Rigs_2005_175	27,251	0,725	3,035	6,246	0,057	0,328	0,328	568,299	0,065	0,029137931
Bore/Drill Rigs	2005	176	250	Bore/Drill Rigs_2005_250	19,806	0,395	1,094	5,8	0,057	0,145	0,145	568,299	0,035	0,015689655
Bore/Drill Rigs	2005	251	500	Bore/Drill Rigs_2005_500	27,527	0,332	1,068	5,051	0,05	0,133	0,133	568,299	0,029	0,013
Bore/Drill Rigs	2005	501	750	Bore/Drill Rigs_2005_750	58,103	0,354	1,068	5,347	0,052	0,138	0,138	568,299	0,032	0,014344828
Bore/Drill Rigs	2005	751	1000	Bore/Drill Rigs_2005_1000	132,307	0,535	1,427	6,8	0,052	0,183	0,183	568,299	0,048	0,021517241
Bore/Drill Rigs	2010	6	15	Bore/Drill Rigs_2010_15	1,052412	0,884	4,58435	5,42137	0,006	0,406	0,374	604,3903	0,176	0,078896552
Bore/Drill Rigs	2010	16	25	Bore/Drill Rigs_2010_25	1,052412	0,884	4,58435	5,42137	0,006	0,406	0,374	604,3903	0,176	0,078896552
Bore/Drill Rigs	2010	26	50	Bore/Drill Rigs_2010_50	1,052412	0,884	4,58435	5,42137	0,006	0,406	0,374	604,3903	0,176	0,078896552
Bore/Drill Rigs	2010	51	120	Bore/Drill Rigs_2010_120	0,45108	0,379	3,31487	4,84273	0,005	0,313	0,288	505,1218	0,147	0,065896552
Bore/Drill Rigs	2010	121	175	Bore/Drill Rigs_2010_175	0,420915	0,354	3,03422	4,77962	0,005	0,231	0,213	533,3654	0,155	0,069482759
Bore/Drill Rigs	2010	176	250	Bore/Drill Rigs_2010_250	0,301395	0,253	1,2308	4,60173	0,005	0,139	0,128	525,165	0,153	0,068586207
Bore/Drill Rigs	2010	251	500	Bore/Drill Rigs_2010_500	0,270831	0,228	1,39755	3,90774	0,005	0,131	0,12	517,3193	0,151	0,067689655
Bore/Drill Rigs	2010	501	750	Bore/Drill Rigs_2010_750	0,19905	0,167	1,08296	3,03556	0,005	0,108	0,099	533,5969	0,155	0,069482759
Bore/Drill Rigs	2010	751	1000	Bore/Drill Rigs_2010_1000	0,189693	0,159	0,96001	4,32965	0,005	0,099	0,091	524,3394	0,153	0,068586207
Bore/Drill Rigs	2011	6	15	Bore/Drill Rigs_2011_15	1,019273	0,856	4,60411	5,41672	0,006	0,4	0,368	602,9382	0,176	0,078896552
Bore/Drill Rigs	2011	16	25	Bore/Drill Rigs_2011_25	1,019273	0,856	4,60411	5,41672	0,006	0,4	0,368	602,9382	0,176	0,078896552
Bore/Drill Rigs	2011	26	50	Bore/Drill Rigs_2011_50	1,019273	0,856	4,60411	5,41672	0,006	0,4	0,368	602,9382	0,176	0,078896552
Bore/Drill Rigs	2011	51	120	Bore/Drill Rigs_2011_120	0,435142	0,366	3,32121	4,72727	0,005	0,303	0,279	504,2171	0,147	0,065896552
Bore/Drill Rigs	2011	121	175	Bore/Drill Rigs_2011_175	0,404145	0,34	3,03462	4,59259	0,005	0,219	0,202	531,8097	0,155	0,069482759
Bore/Drill Rigs	2011	176	250	Bore/Drill Rigs_2011_250	0,289986	0,244	1,21102	4,34748	0,005	0,132	0,122	522,3643	0,152	0,068137931
Bore/Drill Rigs	2011	251	500	Bore/Drill Rigs_2011_500	0,264468	0,222	1,36917	3,72448	0,005	0,125	0,115	512,0559	0,149	0,066793103
Bore/Drill Rigs	2011	501	750	Bore/Drill Rigs_2011_750	0,195451	0,164	1,06361	2,89424	0,005	0,098	0,09	532,4717	0,155	0,069482759
Bore/Drill Rigs	2011	751	1000	Bore/Drill Rigs_2011_1000	0,200744	0,169	0,96855	4,35634	0,005	0,101	0,093	523,0129	0,153	0,068586207
Bore/Drill Rigs	2012	6	15	Bore/Drill Rigs_2012_15	1,043679	0,877	4,70758	5,45218	0,006	0,406	0,374	601,7336	0,176	0,078896552
Bore/Drill Rigs	2012	16	25	Bore/Drill Rigs_2012_25	1,043679	0,877	4,70758	5,45218	0,006	0,406	0,374	601,7336	0,176	0,078896552
Bore/Drill Rigs	2012	26	50	Bore/Drill Rigs_2012_50	1,043679	0,877	4,70758	5,45218	0,006	0,406	0,374	601,7336	0,176	0,078896552
Bore/Drill Rigs	2012	51	120	Bore/Drill Rigs_2012_120	0,439737	0,37	3,34211	4,70854	0,005	0,302	0,278	503,4212	0,147	0,065896552
Bore/Drill Rigs	2012	121	175	Bore/Drill Rigs_2012_175	0,401496	0,337	3,05178	4,52801	0,005	0,215	0,198	531,6414	0,156	0,069931034
Bore/Drill Rigs	2012	176	250	Bore/Drill Rigs_2012_250	0,299105	0,251	1,23628	4,31574	0,005	0,134	0,123	520,9621	0,152	0,068137931
Bore/Drill Rigs	2012	251	500	Bore/Drill Rigs_2012_500	0,271498	0,228	1,3973	3,71268	0,005	0,124	0,115	511,0099	0,149	0,066793103
Bore/Drill Rigs	2012	501	750	Bore/Drill Rigs_2012_750	0,195855	0,165	1,06675	2,78397	0,005	0,094	0,086	530,0759	0,155	0,069482759
Bore/Drill Rigs	2012	751	1000	Bore/Drill Rigs_2012_1000	0,210392	0,177	0,976	4,3794	0,005	0,103	0,094	521,6821	0,153	0,068586207
Bore/Drill Rigs	2013	6	15	Bore/Drill Rigs_2013_15	1,019153	0,856	4,71588	5,44353	0,006	0,398	0,366	598,6307	0,176	0,078896552
Bore/Drill Rigs	2013	16	25	Bore/Drill Rigs_2013_25	1,019153	0,856	4,71588	5,44353	0,006	0,398	0,366	598,6307	0,176	0,078896552
Bore/Drill Rigs	2013	26	50	Bore/Drill Rigs_2013_50	1,019153	0,856	4,71588	5,44353	0,006	0,398	0,366	598,6307	0,176	0,078896552
Bore/Drill Rigs	2013	51	120	Bore/Drill Rigs_2013_120	0,417421	0,351	3,33685	4,52552	0,005	0,279	0,257	501,3795	0,147	0,065896552
Bore/Drill Rigs	2013	121	175	Bore/Drill Rigs_2013_175	0,380511	0,32	3,04123	4,3027	0,005	0,199	0,183	527,5089	0,155	0,069482759
Bore/Drill Rigs	2013	176	250	Bore/Drill Rigs_2013_250	0,286183	0,24	1,21872	4,0183	0,005	0,124	0,114	517,8225	0,152	0,068137931
Bore/Drill Rigs	2013	251	500	Bore/Drill Rigs_2013_500	0,260559	0,219	1,35236	3,49492	0,005	0,115	0,106	507,7707	0,149	0,066793103
Bore/Drill Rigs	2013	501	750	Bore/Drill Rigs_2013_750	0,192576	0,162	1,07935	2,57636	0,005	0,088	0,081	527,7286	0,155	0,069482759
Bore/Drill Rigs	2013	751	1000	Bore/Drill Rigs_2013_1000	0,160352	0,135	0,96188	3,46658	0,005	0,082	0,075	519,8525	0,153	0,068586207
Bore/Drill Rigs	2014	6	15	Bore/Drill Rigs_2014_15	0,992547	0,834	4,69064	5,33236	0,006	0,382	0,351	591,4418	0,175	0,078448276
Bore/Drill Rigs	2014	16	25	Bore/Drill Rigs_2014_25	0,992547	0,834	4,69064	5,33236	0,006	0,382	0,351	591,4418	0,175	0,078448276
Bore/Drill Rigs	2014	26	50	Bore/Drill Rigs_2014_50	0,992547	0,834	4,69064	5,33236	0,006	0,382	0,351	591,4418	0,175	0,078448276
Bore/Drill Rigs	2014	51	120	Bore/Drill Rigs_2014_120	0,379477	0,319	3,32686	4,19515	0,005	0,249	0,229	501,365	0,148	0,066344828
Bore/Drill Rigs	2014	121	175	Bore/Drill Rigs_2014_175	0,366384	0,308	3,04026	4,06571	0,005	0,186	0,171	524,0522	0,155	0,069482759
Bore/Drill Rigs	2014	176	250	Bore/Drill Rigs_2014_250	0,258607	0,217	1,17442	3,52453	0,005	0,105	0,097	512,3362	0,151	0,067689655
Bore/Drill Rigs	2014	251	500	Bore/Drill Rigs_2014_500	0,240166	0,202	1,239	3,18617	0,005	0,101	0,093	506,1536	0,15	0,067241379
Bore/Drill Rigs	2014	501	750	Bore/Drill Rigs_2014_750	0,186731	0,157	1,08678	2,37324	0,005	0,08	0,074	525,2397	0,155	0,069482759
Bore/Drill Rigs	2014	751	1000	Bore/Drill Rigs_2014_1000	0,12496	0,105	0,95104	2,98435	0,005	0,058	0,054	516,5998	0,153	0,068586207
Bore/Drill Rigs	2015	6	15	Bore/Drill Rigs_2015_15	1,007942	0,847	4,73461	5,30345	0,006	0,379	0,349	585,1707	0,175	0,078448276
Bore/Drill Rigs	2015	16	25	Bore/Drill Rigs_2015_25	1,007942	0,847	4,73461	5,30345	0,006	0,379	0,349	585,1707	0,175	0,078448276
Bore/Drill Rigs	2015	26	50	Bore/Drill Rigs_2015_50	1,007942	0,847	4,73461	5,30345	0,006	0,379	0,349	585,1707	0,175	0,078448276
Bore/Drill Rigs	2015	51	120	Bore/Drill Rigs_2015_120	0,378573	0,318	3,3349	4,02775	0,005	0,239	0,22	496,9494	0,148	0,066344828
Bore/Drill Rigs	2015	121	175	Bore/Drill Rigs_2015_175	0,359562	0,302	3,03526	3,90422	0,005	0,176	0,162	517,2068	0,154	0,069034483
Bore/Drill Rigs	2015	176	250	Bore/Drill Rigs_2015_250	0,253803	0,213	1,17834	3,3245	0,005	0,1	0,092	506,5047	0,151	0,067689655
Bore/Drill Rigs	2015	251	500	Bore/Drill Rigs_2015_500	0,237097	0,199	1,25564	3,00307	0,005	0,096	0,088	499,9023	0,149	0,066793103
Bore/Drill Rigs	2015	501	750	Bore/Drill Rigs_2015_750	0,19253	0,162	1,10541	2,37558	0,005	0,081	0,074	520,4733	0,155	0,069482759
Bore/Drill Rigs	2015	751	1000	Bore/Drill Rigs_2015_1000	0,130029	0,109	0,95583	2,99386	0,005	0,059	0,054	511,2533	0,153	0,068586207
Bore/Drill Rigs	2016	6	15	Bore/Drill Rigs_2016_15	1,034535	0,869	4,79659	5,29821	0,006	0,383	0,352	579,3262	0,175	0,078448276
Bore/Drill Rigs	2016	16	25	Bore/Drill Rigs_2016_25	1,034535	0,869	4,79659	5,29821	0,006	0,383	0,352	579,3262	0,175	0,078448276
Bore/Drill Rigs	2016	26	50	Bore/Drill Rigs_2016_50	1,034535	0,869	4,79659	5,29821	0,006	0,383	0,352	579,3262	0,175	0,078448276
Bore/Drill Rigs	2016	51	120	Bore/Drill Rigs_2016_120	0,365397	0,307	3,32648	3,82088	0,005	0,221	0,204	491,6548	0,148	0,066344828
Bore/Drill Rigs	2016	121	175	Bore/Drill Rigs_2016_175	0,33987	0,286	3,02337	3,61582	0,005	0,162	0,149	511,4327	0,154	0,069034483
Bore/Drill Rigs	2016	176	250	Bore/Drill Rigs_2016_250	0,229144	0,193	1,13299	2,9021	0,005	0,085	0,078	502,128	0,151	0,067689655
Bore/Drill Rigs	2016	251	500	Bore/Drill Rigs_2016_500	0,203588	0,171	1,13338	2,50955	0,005	0,077	0,071	494,7606	0,149	0,066793103
Bore/Drill Rigs	2016	501	750	Bore/Drill Rigs_2016_750	0,182018	0,153	1,11952	2,16636	0,005	0,072	0,066	514,8829	0,155	0,069482759

Bore/Drill Rigs	2016	751	1000	Bore/Drill Rigs_2016_1000	0,137307	0,115	0,96409	3,00833	0,005	0,059	0,055	505,9997	0,153	0,068586207
Bore/Drill Rigs	2017	6	15	Bore/Drill Rigs_2017_15	0,957137	0,804	4,65158	5,06335	0,006	0,351	0,323	563,9173	0,173	0,077551724
Bore/Drill Rigs	2017	16	25	Bore/Drill Rigs_2017_25	0,957137	0,804	4,65158	5,06335	0,006	0,351	0,323	563,9173	0,173	0,077551724
Bore/Drill Rigs	2017	26	50	Bore/Drill Rigs_2017_50	0,957137	0,804	4,65158	5,06335	0,006	0,351	0,323	563,9173	0,173	0,077551724
Bore/Drill Rigs	2017	51	120	Bore/Drill Rigs_2017_120	0,354597	0,298	3,33142	3,68536	0,005	0,211	0,194	485,322	0,149	0,066793103
Bore/Drill Rigs	2017	121	175	Bore/Drill Rigs_2017_175	0,290928	0,244	3,0013	2,98245	0,005	0,131	0,121	503,7704	0,154	0,069034483
Bore/Drill Rigs	2017	176	250	Bore/Drill Rigs_2017_250	0,20647	0,173	1,1021	2,5215	0,005	0,072	0,067	494,1381	0,151	0,067689655
Bore/Drill Rigs	2017	251	500	Bore/Drill Rigs_2017_500	0,197407	0,166	1,11891	2,36747	0,005	0,072	0,067	489,4612	0,15	0,067241379
Bore/Drill Rigs	2017	501	750	Bore/Drill Rigs_2017_750	0,184153	0,155	1,13653	2,15656	0,005	0,071	0,066	505,1248	0,155	0,069482759
Bore/Drill Rigs	2017	751	1000	Bore/Drill Rigs_2017_1000	0,143503	0,121	0,97127	3,02051	0,005	0,06	0,055	498,1225	0,153	0,068586207
Bore/Drill Rigs	2018	6	15	Bore/Drill Rigs_2018_15	0,9127	0,767	4,56857	4,86917	0,005	0,329	0,303	554,2038	0,173	0,077551724
Bore/Drill Rigs	2018	16	25	Bore/Drill Rigs_2018_25	0,9127	0,767	4,56857	4,86917	0,005	0,329	0,303	554,2038	0,173	0,077551724
Bore/Drill Rigs	2018	26	50	Bore/Drill Rigs_2018_50	0,9127	0,767	4,56857	4,86917	0,005	0,329	0,303	554,2038	0,173	0,077551724
Bore/Drill Rigs	2018	51	120	Bore/Drill Rigs_2018_120	0,320098	0,269	3,32325	3,39962	0,005	0,184	0,17	479,6719	0,149	0,066793103
Bore/Drill Rigs	2018	121	175	Bore/Drill Rigs_2018_175	0,241793	0,203	2,96107	2,35662	0,005	0,103	0,095	495,0734	0,154	0,069034483
Bore/Drill Rigs	2018	176	250	Bore/Drill Rigs_2018_250	0,183927	0,155	1,07328	2,15308	0,005	0,061	0,056	484,5605	0,151	0,067689655
Bore/Drill Rigs	2018	251	500	Bore/Drill Rigs_2018_500	0,160513	0,135	1,03203	1,74562	0,005	0,052	0,048	485,6893	0,151	0,067689655
Bore/Drill Rigs	2018	501	750	Bore/Drill Rigs_2018_750	0,14994	0,126	1,00559	1,67873	0,005	0,054	0,05	489,7301	0,152	0,068137931
Bore/Drill Rigs	2018	751	1000	Bore/Drill Rigs_2018_1000	0,149052	0,125	0,97772	3,03153	0,005	0,06	0,056	490,2427	0,153	0,068586207
Bore/Drill Rigs	2019	6	15	Bore/Drill Rigs_2019_15	0,858717	0,722	4,49723	4,71795	0,005	0,303	0,278	545,293	0,173	0,077551724
Bore/Drill Rigs	2019	16	25	Bore/Drill Rigs_2019_25	0,858717	0,722	4,49723	4,71795	0,005	0,303	0,278	545,293	0,173	0,077551724
Bore/Drill Rigs	2019	26	50	Bore/Drill Rigs_2019_50	0,858717	0,722	4,49723	4,71795	0,005	0,303	0,278	545,293	0,173	0,077551724
Bore/Drill Rigs	2019	51	120	Bore/Drill Rigs_2019_120	0,317934	0,267	3,33202	3,32102	0,005	0,18	0,166	472,4527	0,149	0,066793103
Bore/Drill Rigs	2019	121	175	Bore/Drill Rigs_2019_175	0,215784	0,181	2,95563	2,01775	0,005	0,088	0,081	487,3552	0,154	0,069034483
Bore/Drill Rigs	2019	176	250	Bore/Drill Rigs_2019_250	0,170614	0,143	1,06058	1,8943	0,005	0,054	0,049	475,7896	0,151	0,067689655
Bore/Drill Rigs	2019	251	500	Bore/Drill Rigs_2019_500	0,153732	0,129	1,03449	1,55098	0,005	0,048	0,044	477,0462	0,151	0,067689655
Bore/Drill Rigs	2019	501	750	Bore/Drill Rigs_2019_750	0,138617	0,116	0,97074	1,44865	0,005	0,048	0,044	481,8363	0,152	0,068137931
Bore/Drill Rigs	2019	751	1000	Bore/Drill Rigs_2019_1000	0,153944	0,129	0,98342	3,04139	0,005	0,061	0,056	482,3593	0,153	0,068586207
Bore/Drill Rigs	2020	6	15	Bore/Drill Rigs_2020_15	0,851825	0,716	4,51013	4,6451	0,006	0,294	0,271	535,2948	0,173	0,077551724
Bore/Drill Rigs	2020	16	25	Bore/Drill Rigs_2020_25	0,851825	0,716	4,51013	4,6451	0,006	0,294	0,271	535,2948	0,173	0,077551724
Bore/Drill Rigs	2020	26	50	Bore/Drill Rigs_2020_50	0,851825	0,716	4,51013	4,6451	0,006	0,294	0,271	535,2948	0,173	0,077551724
Bore/Drill Rigs	2020	51	120	Bore/Drill Rigs_2020_120	0,292949	0,246	3,32347	3,06601	0,005	0,159	0,146	463,5827	0,15	0,067241379
Bore/Drill Rigs	2020	121	175	Bore/Drill Rigs_2020_175	0,207426	0,174	2,96948	1,87149	0,005	0,082	0,076	477,722	0,155	0,069482759
Bore/Drill Rigs	2020	176	250	Bore/Drill Rigs_2020_250	0,169462	0,142	1,06766	1,80732	0,005	0,052	0,048	466,8342	0,151	0,067689655
Bore/Drill Rigs	2020	251	500	Bore/Drill Rigs_2020_500	0,148188	0,125	1,01263	1,40938	0,005	0,045	0,041	466,8219	0,151	0,067689655
Bore/Drill Rigs	2020	501	750	Bore/Drill Rigs_2020_750	0,129293	0,109	0,97413	1,23085	0,005	0,041	0,038	473,6679	0,153	0,068586207
Bore/Drill Rigs	2020	751	1000	Bore/Drill Rigs_2020_1000	0,158163	0,133	0,98839	3,05008	0,005	0,061	0,056	471,8492	0,153	0,068586207
Bore/Drill Rigs	2021	6	15	Bore/Drill Rigs_2021_15	0,845639	0,711	4,54836	4,63432	0,006	0,291	0,268	535,3782	0,173	0,077551724
Bore/Drill Rigs	2021	16	25	Bore/Drill Rigs_2021_25	0,845639	0,711	4,54836	4,63432	0,006	0,291	0,268	535,3782	0,173	0,077551724
Bore/Drill Rigs	2021	26	50	Bore/Drill Rigs_2021_50	0,845639	0,711	4,54836	4,63432	0,006	0,291	0,268	535,3782	0,173	0,077551724
Bore/Drill Rigs	2021	51	120	Bore/Drill Rigs_2021_120	0,258162	0,217	3,30573	2,73675	0,005	0,131	0,12	464,9725	0,15	0,067241379
Bore/Drill Rigs	2021	121	175	Bore/Drill Rigs_2021_175	0,183454	0,154	2,9614	1,5983	0,005	0,07	0,064	477,0482	0,154	0,069034483
Bore/Drill Rigs	2021	176	250	Bore/Drill Rigs_2021_250	0,157647	0,132	1,06418	1,55102	0,005	0,047	0,043	467,9916	0,151	0,067689655
Bore/Drill Rigs	2021	251	500	Bore/Drill Rigs_2021_500	0,139268	0,117	1,01479	1,22069	0,005	0,041	0,038	469,8158	0,152	0,068137931
Bore/Drill Rigs	2021	501	750	Bore/Drill Rigs_2021_750	0,116134	0,098	0,97176	0,95517	0,005	0,033	0,031	474,079	0,153	0,068586207
Bore/Drill Rigs	2021	751	1000	Bore/Drill Rigs_2021_1000	0,161679	0,136	0,99261	3,05759	0,005	0,061	0,057	471,8158	0,153	0,068586207
Bore/Drill Rigs	2022	6	15	Bore/Drill Rigs_2022_15	0,751445	0,631	4,33356	4,28474	0,005	0,241	0,221	529,8703	0,171	0,076655172
Bore/Drill Rigs	2022	16	25	Bore/Drill Rigs_2022_25	0,751445	0,631	4,33356	4,28474	0,005	0,241	0,221	529,8703	0,171	0,076655172
Bore/Drill Rigs	2022	26	50	Bore/Drill Rigs_2022_50	0,751445	0,631	4,33356	4,28474	0,005	0,241	0,221	529,8703	0,171	0,076655172
Bore/Drill Rigs	2022	51	120	Bore/Drill Rigs_2022_120	0,227425	0,191	3,25974	2,42459	0,005	0,107	0,099	462,2674	0,15	0,067241379
Bore/Drill Rigs	2022	121	175	Bore/Drill Rigs_2022_175	0,162807	0,137	2,95431	1,28831	0,005	0,057	0,052	477,3719	0,154	0,069034483
Bore/Drill Rigs	2022	176	250	Bore/Drill Rigs_2022_250	0,136848	0,115	1,04734	1,16293	0,005	0,037	0,034	468,7604	0,152	0,068137931
Bore/Drill Rigs	2022	251	500	Bore/Drill Rigs_2022_500	0,12801	0,108	1,00212	1,03525	0,005	0,035	0,032	467,1923	0,151	0,067689655
Bore/Drill Rigs	2022	501	750	Bore/Drill Rigs_2022_750	0,10809	0,091	0,97519	0,77309	0,005	0,028	0,026	477,141	0,154	0,069034483
Bore/Drill Rigs	2022	751	1000	Bore/Drill Rigs_2022_1000	0,067607	0,057	0,9452	2,27813	0,005	0,018	0,017	472,9214	0,153	0,068586207
Bore/Drill Rigs	2023	6	15	Bore/Drill Rigs_2023_15	0,721105	0,606	4,31077	4,20831	0,005	0,226	0,208	531,9856	0,172	0,077103448
Bore/Drill Rigs	2023	16	25	Bore/Drill Rigs_2023_25	0,721105	0,606	4,31077	4,20831	0,005	0,226	0,208	531,9856	0,172	0,077103448
Bore/Drill Rigs	2023	26	50	Bore/Drill Rigs_2023_50	0,721105	0,606	4,31077	4,20831	0,005	0,226	0,208	531,9856	0,172	0,077103448
Bore/Drill Rigs	2023	51	120	Bore/Drill Rigs_2023_120	0,222828	0,187	3,25754	2,35656	0,005	0,102	0,093	461,214	0,149	0,066793103
Bore/Drill Rigs	2023	121	175	Bore/Drill Rigs_2023_175	0,149078	0,125	2,9693	1,07773	0,005	0,048	0,044	479,6465	0,155	0,069482759
Bore/Drill Rigs	2023	176	250	Bore/Drill Rigs_2023_250	0,131367	0,11	1,04309	1,04653	0,005	0,034	0,031	469,7058	0,152	0,068137931
Bore/Drill Rigs	2023	251	500	Bore/Drill Rigs_2023_500	0,120261	0,101	0,98883	0,89764	0,005	0,03	0,028	464,0407	0,15	0,067241379
Bore/Drill Rigs	2023	501	750	Bore/Drill Rigs_2023_750	0,108039	0,091	0,98235	0,71664	0,005	0,026	0,024	479,2199	0,155	0,069482759
Bore/Drill Rigs	2023	751	1000	Bore/Drill Rigs_2023_1000	0,062646	0,053	0,93615	2,26246	0,005	0,018	0,016	472,0201	0,153	0,068586207
Bore/Drill Rigs	2024	6	15	Bore/Drill Rigs_2024_15	0,724524	0,609	4,33098	4,15902	0,005	0,219	0,202	529,8661	0,171	0,076655172
Bore/Drill Rigs	2024	16	25	Bore/Drill Rigs_2024_25	0,724524	0,609	4,33098	4,15902	0,005	0,219	0,202	529,8661	0,171	0,076655172
Bore/Drill Rigs	2024	26	50	Bore/Drill Rigs_2024_50	0,724524	0,609	4,33098	4,15902	0,005	0,219	0,202	529,8661	0,171	0,076655172
Bore/Drill Rigs	2024	51	120	Bore/Drill Rigs_2024_120	0,211018	0,177	3,25123	2,21634	0,005	0,09	0,083	461,2076	0,149	0,066793103
Bore/Drill Rigs	2024	121	175	Bore/Drill Rigs_2024_175	0,148172	0,125	2,97803	1,02855	0,005	0,046	0,043	478,9441	0,155	0,069482759
Bore/Drill Rigs	2024	176	250	Bore/Drill Rigs_2024_250	0,128551	0,108	1,04591	0,97542	0,005	0,032	0,03	470,7115	0,152	0,068137931
Bore/Drill Rigs	2024	251	500	Bore/Drill Rigs_2024_500	0,122153	0,103	0,99426	0,86053	0,005	0,029	0,027	464,4796	0,15	0,067241379
Bore/Drill Rigs	2024	501	750	Bore/Drill Rigs_2024_750	0,10623	0,089	0,98491	0,67139	0,005	0,026	0,024	480,2246	0,155	0,069482759

Bore/Drill Rigs	2024	751	1000	Bore/Drill Rigs_2024_1000	0,067347	0,057	0,94304	2,27306	0,005	0,018	0,017	471,9261	0,153	0,068586207
Bore/Drill Rigs	2025	6	15	Bore/Drill Rigs_2025_15	0,703036	0,591	4,2728	3,97786	0,005	0,193	0,178	532,8212	0,172	0,077103448
Bore/Drill Rigs	2025	16	25	Bore/Drill Rigs_2025_25	0,703036	0,591	4,2728	3,97786	0,005	0,193	0,178	532,8212	0,172	0,077103448
Bore/Drill Rigs	2025	26	50	Bore/Drill Rigs_2025_50	0,703036	0,591	4,2728	3,97786	0,005	0,193	0,178	532,8212	0,172	0,077103448
Bore/Drill Rigs	2025	51	120	Bore/Drill Rigs_2025_120	0,183914	0,155	3,21758	1,96363	0,005	0,067	0,062	459,8291	0,149	0,066793103
Bore/Drill Rigs	2025	121	175	Bore/Drill Rigs_2025_175	0,135422	0,114	2,9736	0,88787	0,005	0,039	0,036	478,2657	0,155	0,069482759
Bore/Drill Rigs	2025	176	250	Bore/Drill Rigs_2025_250	0,127813	0,107	1,04484	0,95717	0,005	0,031	0,029	470,6535	0,152	0,068137931
Bore/Drill Rigs	2025	251	500	Bore/Drill Rigs_2025_500	0,120956	0,102	0,99738	0,82299	0,005	0,028	0,026	467,2892	0,151	0,067689655
Bore/Drill Rigs	2025	501	750	Bore/Drill Rigs_2025_750	0,100521	0,084	0,98349	0,59628	0,005	0,023	0,021	481,2495	0,156	0,069931034
Bore/Drill Rigs	2025	751	1000	Bore/Drill Rigs_2025_1000	0,07426	0,062	0,95339	2,28923	0,005	0,019	0,017	471,9168	0,153	0,068586207
Bore/Drill Rigs	2030	6	15	Bore/Drill Rigs_2030_15	1,821	0,661	3,469	4,142	0,008	0,161	0,161	568,299	0,059	0,026448276
Bore/Drill Rigs	2030	16	25	Bore/Drill Rigs_2030_25	2,917	0,685	2,339	4,332	0,007	0,161	0,161	568,299	0,061	0,027344828
Bore/Drill Rigs	2030	26	50	Bore/Drill Rigs_2030_50	2,88	0,348	4,029	3,02	0,007	0,013	0,013	568,299	0,031	0,013896552
Bore/Drill Rigs	2030	51	120	Bore/Drill Rigs_2030_120	3,773	0,183	3,434	1,415	0,006	0,012	0,012	568,299	0,016	0,007172414
Bore/Drill Rigs	2030	121	175	Bore/Drill Rigs_2030_175	4,786	0,127	3,038	0,279	0,006	0,01	0,01	568,299	0,011	0,004931034
Bore/Drill Rigs	2030	176	250	Bore/Drill Rigs_2030_250	6,363	0,127	1,035	0,274	0,006	0,01	0,01	568,299	0,011	0,004931034
Bore/Drill Rigs	2030	251	500	Bore/Drill Rigs_2030_500	10,531	0,127	1,006	0,274	0,005	0,01	0,01	568,299	0,011	0,004931034
Bore/Drill Rigs	2030	501	750	Bore/Drill Rigs_2030_750	20,808	0,127	1,006	0,274	0,005	0,01	0,01	568,299	0,011	0,004931034
Bore/Drill Rigs	2030	751	1000	Bore/Drill Rigs_2030_1000	31,441	0,127	1,006	2,372	0,005	0,021	0,021	568,299	0,011	0,004931034
Bore/Drill Rigs	2035	6	15	Bore/Drill Rigs_2035_15	1,821	0,661	3,469	4,142	0,008	0,161	0,161	568,299	0,059	0,026448276
Bore/Drill Rigs	2035	16	25	Bore/Drill Rigs_2035_25	2,917	0,685	2,339	4,332	0,007	0,161	0,161	568,299	0,061	0,027344828
Bore/Drill Rigs	2035	26	50	Bore/Drill Rigs_2035_50	2,881	0,348	4,03	3,019	0,007	0,013	0,013	568,299	0,031	0,013896552
Bore/Drill Rigs	2035	51	120	Bore/Drill Rigs_2035_120	3,768	0,183	3,434	1,411	0,006	0,012	0,012	568,3	0,016	0,007172414
Bore/Drill Rigs	2035	121	175	Bore/Drill Rigs_2035_175	4,767	0,126	3,039	0,272	0,006	0,01	0,01	568,299	0,011	0,004931034
Bore/Drill Rigs	2035	176	250	Bore/Drill Rigs_2035_250	6,357	0,126	1,035	0,272	0,006	0,01	0,01	568,299	0,011	0,004931034
Bore/Drill Rigs	2035	251	500	Bore/Drill Rigs_2035_500	10,52	0,126	1,006	0,272	0,005	0,01	0,01	568,299	0,011	0,004931034
Bore/Drill Rigs	2035	501	750	Bore/Drill Rigs_2035_750	20,787	0,126	1,006	0,272	0,005	0,01	0,01	568,299	0,011	0,004931034
Bore/Drill Rigs	2035	751	1000	Bore/Drill Rigs_2035_1000	31,372	0,126	1,006	2,372	0,005	0,021	0,021	568,299	0,011	0,004931034
Bore/Drill Rigs	2040	6	15	Bore/Drill Rigs_2040_15	1,821	0,661	3,469	4,142	0,008	0,161	0,161	568,299	0,059	0,026448276
Bore/Drill Rigs	2040	16	25	Bore/Drill Rigs_2040_25	2,917	0,685	2,339	4,332	0,007	0,161	0,161	568,299	0,061	0,027344828
Bore/Drill Rigs	2040	26	50	Bore/Drill Rigs_2040_50	2,883	0,348	4,032	3,019	0,007	0,013	0,013	568,3	0,031	0,013896552
Bore/Drill Rigs	2040	51	120	Bore/Drill Rigs_2040_120	3,77	0,183	3,435	1,411	0,006	0,012	0,012	568,299	0,016	0,007172414
Bore/Drill Rigs	2040	121	175	Bore/Drill Rigs_2040_175	4,77	0,127	3,039	0,272	0,006	0,01	0,01	568,299	0,011	0,004931034
Bore/Drill Rigs	2040	176	250	Bore/Drill Rigs_2040_250	6,36	0,127	1,035	0,272	0,006	0,01	0,01	568,3	0,011	0,004931034
Bore/Drill Rigs	2040	251	500	Bore/Drill Rigs_2040_500	10,526	0,127	1,006	0,272	0,005	0,01	0,01	568,299	0,011	0,004931034
Bore/Drill Rigs	2040	501	750	Bore/Drill Rigs_2040_750	20,799	0,127	1,006	0,272	0,005	0,01	0,01	568,299	0,011	0,004931034
Bore/Drill Rigs	2040	751	1000	Bore/Drill Rigs_2040_1000	31,389	0,127	1,006	2,372	0,005	0,021	0,021	568,299	0,011	0,004931034
Cement and Mortar Mixers	1990	6	15	Cement and Mortar Mixers_1990_15	2,932	1,804	4,999	9,999	1,049	0,975	0,975	568,299	0,162	0,07262069
Cement and Mortar Mixers	1990	16	25	Cement and Mortar Mixers_1990_25	9,992	2,213	4,999	6,919	0,855	0,741	0,741	568,299	0,199	0,089206897
Cement and Mortar Mixers	2000	6	15	Cement and Mortar Mixers_2000_15	2,702	1,662	4,78	8,911	0,079	0,745	0,745	568,299	0,15	0,067241379
Cement and Mortar Mixers	2000	16	25	Cement and Mortar Mixers_2000_25	9,397	2,081	4,757	6,401	0,065	0,569	0,569	568,299	0,187	0,083827586
Cement and Mortar Mixers	2005	6	15	Cement and Mortar Mixers_2005_15	1,628	1,001	3,791	6,3	0,079	0,465	0,465	568,299	0,09	0,040344828
Cement and Mortar Mixers	2005	16	25	Cement and Mortar Mixers_2005_25	6,992	1,548	3,786	5,963	0,065	0,471	0,471	568,299	0,139	0,062310345
Cement and Mortar Mixers	2010	6	15	Cement and Mortar Mixers_2010_15	1,153	0,709	3,492	4,545	0,008	0,26	0,26	568,299	0,064	0,028689655
Cement and Mortar Mixers	2010	16	25	Cement and Mortar Mixers_2010_25	5,056	1,119	3,049	5,286	0,007	0,346	0,346	568,299	0,101	0,045275862
Cement and Mortar Mixers	2011	6	15	Cement and Mortar Mixers_2011_15	1,114	0,685	3,479	4,351	0,008	0,231	0,231	568,299	0,061	0,027344828
Cement and Mortar Mixers	2011	16	25	Cement and Mortar Mixers_2011_25	4,656	1,031	2,897	5,144	0,007	0,319	0,319	568,299	0,093	0,041689655
Cement and Mortar Mixers	2012	6	15	Cement and Mortar Mixers_2012_15	1,096	0,674	3,472	4,272	0,008	0,209	0,209	568,299	0,06	0,026896552
Cement and Mortar Mixers	2012	16	25	Cement and Mortar Mixers_2012_25	4,288	0,949	2,757	5,012	0,007	0,293	0,293	568,299	0,085	0,038103448
Cement and Mortar Mixers	2013	6	15	Cement and Mortar Mixers_2013_15	1,087	0,669	3,469	4,223	0,008	0,191	0,191	568,299	0,06	0,026896552
Cement and Mortar Mixers	2013	16	25	Cement and Mortar Mixers_2013_25	3,952	0,875	2,63	4,887	0,007	0,269	0,269	568,299	0,078	0,034965517
Cement and Mortar Mixers	2014	6	15	Cement and Mortar Mixers_2014_15	1,082	0,666	3,469	4,191	0,008	0,177	0,177	568,299	0,06	0,026896552
Cement and Mortar Mixers	2014	16	25	Cement and Mortar Mixers_2014_25	3,783	0,837	2,57	4,793	0,007	0,253	0,253	568,299	0,075	0,03362069
Cement and Mortar Mixers	2015	6	15	Cement and Mortar Mixers_2015_15	1,079	0,663	3,469	4,168	0,008	0,171	0,171	568,3	0,059	0,026448276
Cement and Mortar Mixers	2015	16	25	Cement and Mortar Mixers_2015_25	3,664	0,811	2,531	4,712	0,007	0,24	0,24	568,299	0,073	0,032724138
Cement and Mortar Mixers	2016	6	15	Cement and Mortar Mixers_2016_15	1,076	0,662	3,469	4,153	0,008	0,167	0,167	568,3	0,059	0,026448276
Cement and Mortar Mixers	2016	16	25	Cement and Mortar Mixers_2016_25	3,558	0,788	2,496	4,636	0,007	0,227	0,227	568,299	0,071	0,031827586
Cement and Mortar Mixers	2017	6	15	Cement and Mortar Mixers_2017_15	1,075	0,661	3,469	4,145	0,008	0,165	0,165	568,299	0,059	0,026448276
Cement and Mortar Mixers	2017	16	25	Cement and Mortar Mixers_2017_25	3,466	0,767	2,466	4,567	0,007	0,216	0,216	568,299	0,069	0,030931034
Cement and Mortar Mixers	2018	6	15	Cement and Mortar Mixers_2018_15	1,075	0,661	3,469	4,142	0,008	0,163	0,163	568,299	0,059	0,026448276
Cement and Mortar Mixers	2018	16	25	Cement and Mortar Mixers_2018_25	3,384	0,749	2,44	4,504	0,007	0,205	0,205	568,299	0,067	0,030034483
Cement and Mortar Mixers	2019	6	15	Cement and Mortar Mixers_2019_15	1,075	0,661	3,469	4,142	0,008	0,162	0,162	568,299	0,059	0,026448276
Cement and Mortar Mixers	2019	16	25	Cement and Mortar Mixers_2019_25	3,321	0,735	2,417	4,469	0,007	0,196	0,196	568,299	0,066	0,029586207
Cement and Mortar Mixers	2020	6	15	Cement and Mortar Mixers_2020_15	1,075	0,661	3,47	4,142	0,008	0,161	0,161	568,299	0,059	0,026448276
Cement and Mortar Mixers	2020	16	25	Cement and Mortar Mixers_2020_25	3,265	0,723	2,397	4,442	0,007	0,187	0,187	568,299	0,065	0,029137931
Cement and Mortar Mixers	2021	6	15	Cement and Mortar Mixers_2021_15	1,075	0,661	3,469	4,142	0,008	0,161	0,161	568,299	0,059	0,026448276
Cement and Mortar Mixers	2021	16	25	Cement and Mortar Mixers_2021_25	3,219	0,712	2,381	4,419	0,007	0,18	0,18	568,299	0,064	0,028689655
Cement and Mortar Mixers	2022	6	15	Cement and Mortar Mixers_2022_15	1,075	0,661	3,47	4,142	0,008	0,161	0,161	568,299	0,059	0,026448276
Cement and Mortar Mixers	2022	16	25	Cement and Mortar Mixers_2022_25	3,182	0,704	2,367	4,399	0,007	0,175	0,175	568,299	0,063	0,028241379
Cement and Mortar Mixers	2023	6	15	Cement and Mortar Mixers_2023_15	1,075	0,661	3,469	4,142	0,008	0,161	0,161	568,299	0,059	0,026448276
Cement and Mortar Mixers	2023	16	25	Cement and Mortar Mixers_2023_25	3,151	0,697	2,356	4,382	0,007	0,172	0,172	568,299	0,062	0,027793103

Cement and Mortar Mixers	2024	6	15	Cement and Mortar Mixers_2024_15	1,075	0,661	3,469	4,142	0,008	0,161	0,161	568,299	0,059	0,026448276
Cement and Mortar Mixers	2024	16	25	Cement and Mortar Mixers_2024_25	3,129	0,693	2,349	4,369	0,007	0,17	0,17	568,299	0,062	0,027793103
Cement and Mortar Mixers	2025	6	15	Cement and Mortar Mixers_2025_15	1,075	0,661	3,469	4,142	0,008	0,161	0,161	568,299	0,059	0,026448276
Cement and Mortar Mixers	2025	16	25	Cement and Mortar Mixers_2025_25	3,113	0,689	2,344	4,357	0,007	0,168	0,168	568,299	0,062	0,027793103
Cement and Mortar Mixers	2030	6	15	Cement and Mortar Mixers_2030_15	1,075	0,661	3,469	4,142	0,008	0,161	0,161	568,299	0,059	0,026448276
Cement and Mortar Mixers	2030	16	25	Cement and Mortar Mixers_2030_25	3,095	0,685	2,339	4,333	0,007	0,162	0,162	568,299	0,061	0,027344828
Cement and Mortar Mixers	2035	6	15	Cement and Mortar Mixers_2035_15	1,075	0,661	3,469	4,142	0,008	0,161	0,161	568,299	0,059	0,026448276
Cement and Mortar Mixers	2035	16	25	Cement and Mortar Mixers_2035_25	3,095	0,685	2,339	4,332	0,007	0,161	0,161	568,299	0,061	0,027344828
Cement and Mortar Mixers	2040	6	15	Cement and Mortar Mixers_2040_15	1,075	0,661	3,47	4,142	0,008	0,161	0,161	568,299	0,059	0,026448276
Cement and Mortar Mixers	2040	16	25	Cement and Mortar Mixers_2040_25	3,095	0,685	2,339	4,332	0,007	0,161	0,161	568,299	0,061	0,027344828
Concrete/Industrial Saws	1990	16	25	Concrete/Industrial Saws_1990_25	4,947	2,213	4,999	6,919	0,855	0,741	0,741	568,299	0,199	0,089206897
Concrete/Industrial Saws	1990	26	50	Concrete/Industrial Saws_1990_50	20,26	4,943	9,962	8,008	0,871	1,297	1,297	568,299	0,446	0,199931034
Concrete/Industrial Saws	1990	51	120	Concrete/Industrial Saws_1990_120	24,821	2,467	5,934	15,608	0,791	1,385	1,385	568,299	0,222	0,099517241
Concrete/Industrial Saws	1990	121	175	Concrete/Industrial Saws_1990_175	45,581	2,097	5,376	15,952	0,758	1,172	1,172	568,3	0,189	0,084724138
Concrete/Industrial Saws	2000	16	25	Concrete/Industrial Saws_2000_25	4,266	1,908	4,438	6,326	0,065	0,555	0,555	568,299	0,172	0,077103448
Concrete/Industrial Saws	2000	26	50	Concrete/Industrial Saws_2000_50	14,64	3,572	7,547	6,784	0,066	0,789	0,789	568,299	0,322	0,144344828
Concrete/Industrial Saws	2000	51	120	Concrete/Industrial Saws_2000_120	16,713	1,661	4,354	9,903	0,06	0,77	0,77	568,299	0,149	0,066793103
Concrete/Industrial Saws	2000	121	175	Concrete/Industrial Saws_2000_175	24,252	1,115	3,531	9,017	0,057	0,452	0,452	568,3	0,1	0,044827586
Concrete/Industrial Saws	2005	16	25	Concrete/Industrial Saws_2005_25	1,899	0,849	2,519	5,321	0,065	0,333	0,333	568,299	0,076	0,034068966
Concrete/Industrial Saws	2005	26	50	Concrete/Industrial Saws_2005_50	13,023	3,177	6,994	6,32	0,066	0,732	0,732	568,299	0,286	0,128206897
Concrete/Industrial Saws	2005	51	120	Concrete/Industrial Saws_2005_120	14,366	1,428	4,05	8,401	0,06	0,714	0,714	568,299	0,128	0,05737931
Concrete/Industrial Saws	2005	121	175	Concrete/Industrial Saws_2005_175	20,277	0,932	3,223	7,685	0,057	0,393	0,393	568,299	0,084	0,037655172
Concrete/Industrial Saws	2010	16	25	Concrete/Industrial Saws_2010_25	1,545	0,691	2,339	4,411	0,007	0,216	0,216	568,299	0,062	0,027793103
Concrete/Industrial Saws	2010	26	50	Concrete/Industrial Saws_2010_50	9,492	2,316	6,039	5,774	0,007	0,565	0,565	568,299	0,208	0,093241379
Concrete/Industrial Saws	2010	51	120	Concrete/Industrial Saws_2010_120	10,348	1,028	3,813	6,592	0,006	0,551	0,551	568,299	0,092	0,041241379
Concrete/Industrial Saws	2010	121	175	Concrete/Industrial Saws_2010_175	14,859	0,683	3,116	5,838	0,006	0,306	0,306	568,299	0,061	0,027344828
Concrete/Industrial Saws	2011	16	25	Concrete/Industrial Saws_2011_25	1,539	0,688	2,339	4,372	0,007	0,193	0,193	568,299	0,062	0,027793103
Concrete/Industrial Saws	2011	26	50	Concrete/Industrial Saws_2011_50	8,781	2,142	5,854	5,68	0,007	0,534	0,534	568,299	0,193	0,086517241
Concrete/Industrial Saws	2011	51	120	Concrete/Industrial Saws_2011_120	9,617	0,955	3,775	6,222	0,006	0,524	0,524	568,299	0,086	0,038551724
Concrete/Industrial Saws	2011	121	175	Concrete/Industrial Saws_2011_175	13,917	0,64	3,104	5,491	0,006	0,293	0,293	568,299	0,057	0,025551724
Concrete/Industrial Saws	2012	16	25	Concrete/Industrial Saws_2012_25	1,535	0,686	2,339	4,348	0,007	0,173	0,173	568,299	0,061	0,027344828
Concrete/Industrial Saws	2012	26	50	Concrete/Industrial Saws_2012_50	8,071	1,969	5,671	5,59	0,007	0,503	0,503	568,299	0,177	0,079344828
Concrete/Industrial Saws	2012	51	120	Concrete/Industrial Saws_2012_120	8,902	0,884	3,74	5,844	0,006	0,489	0,489	568,299	0,079	0,035413793
Concrete/Industrial Saws	2012	121	175	Concrete/Industrial Saws_2012_175	12,992	0,597	3,094	5,146	0,006	0,272	0,272	568,299	0,053	0,023758621
Concrete/Industrial Saws	2013	16	25	Concrete/Industrial Saws_2013_25	1,533	0,685	2,339	4,335	0,007	0,168	0,168	568,299	0,061	0,027344828
Concrete/Industrial Saws	2013	26	50	Concrete/Industrial Saws_2013_50	7,362	1,796	5,489	5,377	0,007	0,463	0,463	568,299	0,162	0,07262069
Concrete/Industrial Saws	2013	51	120	Concrete/Industrial Saws_2013_120	8,209	0,816	3,706	5,483	0,006	0,451	0,451	568,299	0,073	0,032724138
Concrete/Industrial Saws	2013	121	175	Concrete/Industrial Saws_2013_175	12,096	0,556	3,086	4,829	0,006	0,25	0,25	568,299	0,05	0,022413793
Concrete/Industrial Saws	2014	16	25	Concrete/Industrial Saws_2014_25	1,532	0,685	2,339	4,332	0,007	0,164	0,164	568,299	0,061	0,027344828
Concrete/Industrial Saws	2014	26	50	Concrete/Industrial Saws_2014_50	6,665	1,626	5,313	5,172	0,007	0,424	0,424	568,299	0,146	0,065448276
Concrete/Industrial Saws	2014	51	120	Concrete/Industrial Saws_2014_120	7,539	0,749	3,675	5,16	0,006	0,412	0,412	568,299	0,067	0,030034483
Concrete/Industrial Saws	2014	121	175	Concrete/Industrial Saws_2014_175	11,238	0,517	3,08	4,531	0,006	0,228	0,228	568,299	0,046	0,02062069
Concrete/Industrial Saws	2015	16	25	Concrete/Industrial Saws_2015_25	1,532	0,685	2,339	4,332	0,007	0,162	0,162	568,299	0,061	0,027344828
Concrete/Industrial Saws	2015	26	50	Concrete/Industrial Saws_2015_50	6,027	1,47	5,165	4,989	0,007	0,386	0,386	568,299	0,132	0,059172414
Concrete/Industrial Saws	2015	51	120	Concrete/Industrial Saws_2015_120	6,878	0,683	3,647	4,789	0,006	0,372	0,372	568,3	0,061	0,027344828
Concrete/Industrial Saws	2015	121	175	Concrete/Industrial Saws_2015_175	10,333	0,475	3,077	4,112	0,006	0,207	0,207	568,299	0,042	0,018827586
Concrete/Industrial Saws	2016	16	25	Concrete/Industrial Saws_2016_25	1,532	0,685	2,339	4,332	0,007	0,161	0,161	568,299	0,061	0,027344828
Concrete/Industrial Saws	2016	26	50	Concrete/Industrial Saws_2016_50	5,419	1,322	5,029	4,818	0,007	0,35	0,35	568,3	0,119	0,053344828
Concrete/Industrial Saws	2016	51	120	Concrete/Industrial Saws_2016_120	6,237	0,62	3,62	4,432	0,006	0,333	0,333	568,3	0,055	0,024655172
Concrete/Industrial Saws	2016	121	175	Concrete/Industrial Saws_2016_175	9,455	0,435	3,074	3,708	0,006	0,186	0,186	568,299	0,039	0,017482759
Concrete/Industrial Saws	2017	16	25	Concrete/Industrial Saws_2017_25	1,532	0,685	2,34	4,332	0,007	0,161	0,161	568,299	0,061	0,027344828
Concrete/Industrial Saws	2017	26	50	Concrete/Industrial Saws_2017_50	4,816	1,175	4,894	4,652	0,007	0,313	0,313	568,299	0,106	0,047517241
Concrete/Industrial Saws	2017	51	120	Concrete/Industrial Saws_2017_120	5,61	0,557	3,595	4,086	0,006	0,294	0,294	568,299	0,05	0,022413793
Concrete/Industrial Saws	2017	121	175	Concrete/Industrial Saws_2017_175	8,602	0,395	3,073	3,316	0,006	0,165	0,165	568,299	0,035	0,015689655
Concrete/Industrial Saws	2018	16	25	Concrete/Industrial Saws_2018_25	1,532	0,685	2,339	4,332	0,007	0,161	0,161	568,299	0,061	0,027344828
Concrete/Industrial Saws	2018	26	50	Concrete/Industrial Saws_2018_50	4,233	1,032	4,766	4,492	0,007	0,277	0,277	568,299	0,093	0,041689655
Concrete/Industrial Saws	2018	51	120	Concrete/Industrial Saws_2018_120	5,014	0,498	3,571	3,754	0,006	0,256	0,256	568,299	0,044	0,019724138
Concrete/Industrial Saws	2018	121	175	Concrete/Industrial Saws_2018_175	7,805	0,359	3,072	2,945	0,006	0,145	0,145	568,299	0,032	0,014344828
Concrete/Industrial Saws	2019	16	25	Concrete/Industrial Saws_2019_25	1,532	0,685	2,339	4,332	0,007	0,161	0,161	568,299	0,061	0,027344828
Concrete/Industrial Saws	2019	26	50	Concrete/Industrial Saws_2019_50	3,686	0,899	4,645	4,338	0,007	0,242	0,242	568,299	0,081	0,036310345
Concrete/Industrial Saws	2019	51	120	Concrete/Industrial Saws_2019_120	4,463	0,443	3,55	3,441	0,006	0,22	0,22	568,3	0,04	0,017931034
Concrete/Industrial Saws	2019	121	175	Concrete/Industrial Saws_2019_175	7,177	0,33	3,072	2,618	0,006	0,128	0,128	568,299	0,029	0,013
Concrete/Industrial Saws	2020	16	25	Concrete/Industrial Saws_2020_25	1,532	0,685	2,339	4,332	0,007	0,161	0,161	568,299	0,061	0,027344828
Concrete/Industrial Saws	2020	26	50	Concrete/Industrial Saws_2020_50	3,271	0,798	4,552	4,196	0,007	0,212	0,212	568,299	0,072	0,032275862
Concrete/Industrial Saws	2020	51	120	Concrete/Industrial Saws_2020_120	4,042	0,401	3,535	3,163	0,006	0,19	0,19	568,299	0,036	0,016137931
Concrete/Industrial Saws	2020	121	175	Concrete/Industrial Saws_2020_175	6,669	0,306	3,072	2,324	0,006	0,114	0,114	568,299	0,027	0,012103448
Concrete/Industrial Saws	2021	16	25	Concrete/Industrial Saws_2021_25	1,532	0,685	2,34	4,332	0,007	0,161	0,161	568,299	0,061	0,027344828
Concrete/Industrial Saws	2021	26	50	Concrete/Industrial Saws_2021_50	2,959	0,722	4,481	4,063	0,007	0,184	0,184	568,3	0,065	0,029137931
Concrete/Industrial Saws	2021	51	120	Concrete/Industrial Saws_2021_120	3,721	0,369	3,523	2,913	0,006	0,166	0,166	568,299	0,033	0,014793103
Concrete/Industrial Saws	2021	121	175	Concrete/Industrial Saws_2021_175	6,227	0,286	3,072	2,055	0,006	0,101	0,101	568,299	0,025	0,011206897
Concrete/Industrial Saws	2022	16	25	Concrete/Industrial Saws_2022_25	1,532	0,685	2,339	4,332	0,007	0,161	0,161	568,299	0,061	0,027344828
Concrete/Industrial Saws	2022	26	50	Concrete/Industrial Saws_2022_50	2,705	0,66	4,422	3,936	0,007	0,158	0,158	568,3	0,059	0,026448276

Concrete/Industrial Saws	2022	51	120	Concrete/Industrial Saws_2022_120	3,457	0,343	3,514	2,686	0,006	0,144	0,144	568,299	0,031	0,013896552
Concrete/Industrial Saws	2022	121	175	Concrete/Industrial Saws_2022_175	5,819	0,267	3,072	1,806	0,006	0,089	0,089	568,3	0,024	0,010758621
Concrete/Industrial Saws	2023	16	25	Concrete/Industrial Saws_2023_25	1,532	0,685	2,34	4,332	0,007	0,161	0,161	568,299	0,061	0,027344828
Concrete/Industrial Saws	2023	26	50	Concrete/Industrial Saws_2023_50	2,484	0,606	4,372	3,815	0,007	0,134	0,134	568,299	0,054	0,024206897
Concrete/Industrial Saws	2023	51	120	Concrete/Industrial Saws_2023_120	3,223	0,32	3,507	2,478	0,006	0,123	0,123	568,3	0,028	0,012551724
Concrete/Industrial Saws	2023	121	175	Concrete/Industrial Saws_2023_175	5,453	0,25	3,072	1,599	0,006	0,077	0,077	568,299	0,022	0,009862069
Concrete/Industrial Saws	2024	16	25	Concrete/Industrial Saws_2024_25	1,532	0,685	2,339	4,332	0,007	0,161	0,161	568,299	0,061	0,027344828
Concrete/Industrial Saws	2024	26	50	Concrete/Industrial Saws_2024_50	2,303	0,561	4,33	3,701	0,007	0,115	0,115	568,3	0,05	0,022413793
Concrete/Industrial Saws	2024	51	120	Concrete/Industrial Saws_2024_120	3,023	0,3	3,5	2,315	0,006	0,106	0,106	568,299	0,027	0,012103448
Concrete/Industrial Saws	2024	121	175	Concrete/Industrial Saws_2024_175	5,117	0,235	3,072	1,418	0,006	0,067	0,067	568,299	0,021	0,009413793
Concrete/Industrial Saws	2025	16	25	Concrete/Industrial Saws_2025_25	1,532	0,685	2,339	4,332	0,007	0,161	0,161	568,299	0,061	0,027344828
Concrete/Industrial Saws	2025	26	50	Concrete/Industrial Saws_2025_50	2,153	0,525	4,297	3,592	0,007	0,099	0,099	568,299	0,047	0,021068966
Concrete/Industrial Saws	2025	51	120	Concrete/Industrial Saws_2025_120	2,849	0,283	3,495	2,176	0,006	0,089	0,089	568,3	0,025	0,011206897
Concrete/Industrial Saws	2025	121	175	Concrete/Industrial Saws_2025_175	4,8	0,22	3,073	1,249	0,006	0,056	0,056	568,3	0,019	0,008517241
Concrete/Industrial Saws	2030	16	25	Concrete/Industrial Saws_2030_25	1,532	0,685	2,339	4,332	0,007	0,161	0,161	568,299	0,061	0,027344828
Concrete/Industrial Saws	2030	26	50	Concrete/Industrial Saws_2030_50	1,679	0,409	4,199	3,222	0,007	0,041	0,041	568,299	0,036	0,016137931
Concrete/Industrial Saws	2030	51	120	Concrete/Industrial Saws_2030_120	2,226	0,221	3,48	1,667	0,006	0,036	0,036	568,299	0,019	0,008517241
Concrete/Industrial Saws	2030	121	175	Concrete/Industrial Saws_2030_175	3,551	0,163	3,074	0,59	0,006	0,025	0,025	568,299	0,014	0,006275862
Concrete/Industrial Saws	2035	16	25	Concrete/Industrial Saws_2035_25	1,532	0,685	2,339	4,332	0,007	0,161	0,161	568,299	0,061	0,027344828
Concrete/Industrial Saws	2035	26	50	Concrete/Industrial Saws_2035_50	1,54	0,375	4,174	3,107	0,007	0,021	0,021	568,3	0,033	0,014793103
Concrete/Industrial Saws	2035	51	120	Concrete/Industrial Saws_2035_120	2,015	0,2	3,476	1,491	0,006	0,018	0,018	568,299	0,018	0,008068966
Concrete/Industrial Saws	2035	121	175	Concrete/Industrial Saws_2035_175	3,121	0,143	3,075	0,374	0,006	0,014	0,014	568,299	0,012	0,00537931
Concrete/Industrial Saws	2040	16	25	Concrete/Industrial Saws_2040_25	1,532	0,685	2,339	4,332	0,007	0,161	0,161	568,299	0,061	0,027344828
Concrete/Industrial Saws	2040	26	50	Concrete/Industrial Saws_2040_50	1,532	0,373	4,175	3,058	0,007	0,014	0,014	568,299	0,033	0,014793103
Concrete/Industrial Saws	2040	51	120	Concrete/Industrial Saws_2040_120	1,968	0,195	3,477	1,434	0,006	0,013	0,013	568,299	0,017	0,00762069
Concrete/Industrial Saws	2040	121	175	Concrete/Industrial Saws_2040_175	2,965	0,136	3,076	0,297	0,006	0,011	0,011	568,3	0,012	0,00537931
Cranes	1990	26	50	Cranes_1990_50	13,537	5,179	10,396	8,093	0,871	1,345	1,345	568,299	0,467	0,209344828
Cranes	1990	51	120	Cranes_1990_120	14,178	2,508	5,983	15,674	0,791	1,427	1,427	568,299	0,226	0,101310345
Cranes	1990	121	175	Cranes_1990_175	18,412	2,033	5,387	15,601	0,758	1,142	1,142	568,299	0,183	0,082034483
Cranes	1990	176	250	Cranes_1990_250	25,703	2,033	5,387	15,601	0,758	1,142	1,142	568,299	0,183	0,082034483
Cranes	1990	251	500	Cranes_1990_500	36,191	1,782	12,529	14,718	0,662	0,968	0,968	568,299	0,16	0,071724138
Cranes	1990	501	750	Cranes_1990_750	60,897	1,782	12,529	14,718	1,018	0,986	0,986	568,299	0,16	0,071724138
Cranes	1990	1001	9999	Cranes_1990_9999	194,538	1,778	12,529	14,718	1,018	0,98	0,98	568,299	0,16	0,071724138
Cranes	2000	26	50	Cranes_2000_50	12,119	4,636	9,507	7,163	0,066	0,958	0,958	568,3	0,418	0,18737931
Cranes	2000	51	120	Cranes_2000_120	10,887	1,926	4,81	10,905	0,06	0,93	0,93	568,299	0,173	0,077551724
Cranes	2000	121	175	Cranes_2000_175	11,77	1,299	3,932	9,929	0,057	0,552	0,552	568,299	0,117	0,052448276
Cranes	2000	176	250	Cranes_2000_250	14,291	1,13	3,285	9,635	0,057	0,47	0,47	568,299	0,101	0,045275862
Cranes	2000	251	500	Cranes_2000_500	20,704	1,019	5,545	9,139	0,05	0,411	0,411	568,299	0,092	0,041241379
Cranes	2000	501	750	Cranes_2000_750	34,838	1,019	5,545	9,139	0,052	0,411	0,411	568,299	0,092	0,041241379
Cranes	2000	1001	9999	Cranes_2000_9999	116,509	1,064	6,045	9,643	0,052	0,394	0,394	568,299	0,096	0,043034483
Cranes	2005	26	50	Cranes_2005_50	10,96	4,193	8,893	6,736	0,066	0,898	0,898	568,3	0,378	0,169448276
Cranes	2005	51	120	Cranes_2005_120	9,53	1,686	4,493	9,357	0,06	0,875	0,875	568,299	0,152	0,068137931
Cranes	2005	121	175	Cranes_2005_175	10,036	1,108	3,6	8,542	0,057	0,487	0,487	568,299	0,099	0,04437931
Cranes	2005	176	250	Cranes_2005_250	10,718	0,847	2,367	8,163	0,057	0,343	0,343	568,299	0,076	0,034068966
Cranes	2005	251	500	Cranes_2005_500	15,234	0,75	3,287	7,448	0,05	0,303	0,303	568,299	0,067	0,030034483
Cranes	2005	501	750	Cranes_2005_750	25,971	0,76	3,283	7,598	0,052	0,305	0,305	568,299	0,068	0,030482759
Cranes	2005	1001	9999	Cranes_2005_9999	91,74	0,838	3,718	8,503	0,052	0,293	0,293	568,299	0,075	0,03362069
Cranes	2010	26	50	Cranes_2010_50	2,786882	2,342	7,37084	6,30432	0,005	0,665	0,612	575,653	0,168	0,075310345
Cranes	2010	51	120	Cranes_2010_120	1,626435	1,367	5,06328	11,2099	0,005	0,834	0,767	522,2692	0,152	0,068137931
Cranes	2010	121	175	Cranes_2010_175	0,999512	0,84	3,96843	9,06236	0,005	0,483	0,445	527,7153	0,154	0,069034483
Cranes	2010	176	250	Cranes_2010_250	0,826087	0,694	2,85637	8,39974	0,005	0,383	0,353	525,6477	0,153	0,068586207
Cranes	2010	251	500	Cranes_2010_500	0,629842	0,529	4,77692	7,05496	0,005	0,292	0,268	524,2494	0,153	0,068586207
Cranes	2010	501	750	Cranes_2010_750	0,3105	0,261	1,59747	4,49648	0,005	0,149	0,137	523,8164	0,152	0,068137931
Cranes	2010	1001	9999	Cranes_2010_9999	0,387608	0,326	1,00751	6,39903	0,005	0,151	0,139	524,505	0,153	0,068586207
Cranes	2011	26	50	Cranes_2011_50	2,66715	2,241	7,21121	6,2271	0,005	0,641	0,59	574,2181	0,168	0,075310345
Cranes	2011	51	120	Cranes_2011_120	1,579127	1,327	5,02442	10,9169	0,005	0,81	0,745	521,0055	0,152	0,068137931
Cranes	2011	121	175	Cranes_2011_175	0,990868	0,833	3,9727	8,96629	0,005	0,48	0,441	526,3466	0,154	0,069034483
Cranes	2011	176	250	Cranes_2011_250	0,818849	0,688	2,82731	8,29972	0,005	0,379	0,349	524,3412	0,153	0,068586207
Cranes	2011	251	500	Cranes_2011_500	0,613791	0,516	4,61471	6,85019	0,005	0,283	0,26	523,002	0,153	0,068586207
Cranes	2011	501	750	Cranes_2011_750	0,317708	0,267	1,60931	4,47987	0,005	0,151	0,139	522,4977	0,152	0,068137931
Cranes	2011	1001	9999	Cranes_2011_9999	0,392668	0,33	1,01544	6,442	0,005	0,153	0,141	523,1938	0,153	0,068586207
Cranes	2012	26	50	Cranes_2012_50	2,575229	2,164	7,10245	6,16881	0,005	0,622	0,573	572,7834	0,168	0,075310345
Cranes	2012	51	120	Cranes_2012_120	1,549708	1,302	4,99918	10,7338	0,005	0,795	0,732	519,357	0,152	0,068137931
Cranes	2012	121	175	Cranes_2012_175	0,992021	0,834	3,98552	8,9416	0,005	0,481	0,442	525,0081	0,154	0,069034483
Cranes	2012	176	250	Cranes_2012_250	0,82388	0,692	2,83394	8,30152	0,005	0,381	0,35	522,9802	0,153	0,068586207
Cranes	2012	251	500	Cranes_2012_500	0,612564	0,515	4,5553	6,7893	0,005	0,281	0,259	521,6408	0,153	0,068586207
Cranes	2012	501	750	Cranes_2012_750	0,324471	0,273	1,62066	4,45619	0,005	0,152	0,14	521,1061	0,152	0,068137931
Cranes	2012	1001	9999	Cranes_2012_9999	0,397633	0,334	1,02322	6,48415	0,005	0,156	0,144	521,8825	0,153	0,068586207
Cranes	2013	26	50	Cranes_2013_50	2,54578	2,139	7,11869	6,10837	0,005	0,61	0,561	569,9097	0,168	0,075310345
Cranes	2013	51	120	Cranes_2013_120	1,506211	1,266	4,95084	10,4655	0,005	0,775	0,713	516,6909	0,152	0,068137931
Cranes	2013	121	175	Cranes_2013_175	0,982629	0,826	3,98019	8,83222	0,005	0,476	0,438	522,3332	0,154	0,069034483
Cranes	2013	176	250	Cranes_2013_250	0,813083	0,683	2,80099	8,15558	0,005	0,375	0,345	520,3446	0,153	0,068586207

Cranes	2013	251	500	Cranes_2013_500	0,59291	0,498	4,36265	6,51563	0,005	0,27	0,248	519,0961	0,153	0,068586207
Cranes	2013	501	750	Cranes_2013_750	0,327629	0,275	1,62896	4,36739	0,005	0,15	0,138	518,355	0,152	0,068137931
Cranes	2013	1001	9999	Cranes_2013_9999	0,402502	0,338	1,03085	6,5255	0,005	0,159	0,146	519,26	0,153	0,068586207
Cranes	2014	26	50	Cranes_2014_50	2,516704	2,115	7,12566	6,09324	0,005	0,607	0,559	567,0058	0,168	0,075310345
Cranes	2014	51	120	Cranes_2014_120	1,481452	1,245	4,92305	10,3017	0,005	0,765	0,704	514,0286	0,152	0,068137931
Cranes	2014	121	175	Cranes_2014_175	0,944168	0,793	3,93186	8,47052	0,005	0,457	0,42	519,5114	0,154	0,069034483
Cranes	2014	176	250	Cranes_2014_250	0,786323	0,661	2,72625	7,86026	0,005	0,36	0,331	517,6833	0,153	0,068586207
Cranes	2014	251	500	Cranes_2014_500	0,574656	0,483	4,17708	6,26415	0,005	0,26	0,239	516,5784	0,153	0,068586207
Cranes	2014	501	750	Cranes_2014_750	0,333096	0,28	1,63547	4,32737	0,005	0,151	0,139	515,6071	0,152	0,068137931
Cranes	2014	1001	9999	Cranes_2014_9999	0,143297	0,12	0,94782	2,28075	0,005	0,054	0,05	516,6375	0,153	0,068586207
Cranes	2015	26	50	Cranes_2015_50	2,483294	2,087	7,12517	6,07491	0,005	0,601	0,552	561,2236	0,168	0,075310345
Cranes	2015	51	120	Cranes_2015_120	1,444394	1,214	4,88366	10,0604	0,005	0,747	0,687	508,8366	0,152	0,068137931
Cranes	2015	121	175	Cranes_2015_175	0,930749	0,782	3,91821	8,3254	0,005	0,45	0,414	514,2598	0,154	0,069034483
Cranes	2015	176	250	Cranes_2015_250	0,764242	0,642	2,65334	7,62156	0,005	0,348	0,32	512,4484	0,153	0,068586207
Cranes	2015	251	500	Cranes_2015_500	0,565318	0,475	4,10962	6,12404	0,005	0,253	0,233	511,1972	0,153	0,068586207
Cranes	2015	501	750	Cranes_2015_750	0,340293	0,286	1,64279	4,31183	0,005	0,152	0,14	510,3342	0,152	0,068137931
Cranes	2015	1001	9999	Cranes_2015_9999	0,156078	0,131	0,95679	2,29477	0,005	0,055	0,051	511,3924	0,153	0,068586207
Cranes	2016	26	50	Cranes_2016_50	2,535089	2,13	7,2684	6,11027	0,005	0,61	0,561	555,4414	0,168	0,075310345
Cranes	2016	51	120	Cranes_2016_120	1,373103	1,154	4,79702	9,60772	0,005	0,709	0,653	503,5992	0,152	0,068137931
Cranes	2016	121	175	Cranes_2016_175	0,884915	0,744	3,86156	7,88718	0,005	0,427	0,393	508,9515	0,154	0,069034483
Cranes	2016	176	250	Cranes_2016_250	0,741297	0,623	2,5822	7,38068	0,005	0,335	0,308	507,1552	0,153	0,068586207
Cranes	2016	251	500	Cranes_2016_500	0,527153	0,443	3,83445	5,64865	0,005	0,233	0,215	506,0882	0,153	0,068586207
Cranes	2016	501	750	Cranes_2016_750	0,347738	0,292	1,65024	4,31387	0,005	0,153	0,141	505,0695	0,152	0,068137931
Cranes	2016	1001	9999	Cranes_2016_9999	0,168646	0,142	0,96562	2,30856	0,005	0,056	0,052	506,1474	0,153	0,068586207
Cranes	2017	26	50	Cranes_2017_50	2,585562	2,173	7,40804	6,14479	0,005	0,62	0,57	546,7815	0,168	0,075310345
Cranes	2017	51	120	Cranes_2017_120	1,304913	1,096	4,71022	9,15389	0,005	0,678	0,624	495,7534	0,152	0,068137931
Cranes	2017	121	175	Cranes_2017_175	0,828528	0,696	3,78744	7,36009	0,005	0,397	0,366	501,093	0,154	0,069034483
Cranes	2017	176	250	Cranes_2017_250	0,667136	0,561	2,38452	6,65526	0,005	0,297	0,273	499,3721	0,153	0,068586207
Cranes	2017	251	500	Cranes_2017_500	0,488095	0,41	3,54746	5,23184	0,005	0,212	0,195	498,439	0,153	0,068586207
Cranes	2017	501	750	Cranes_2017_750	0,34114	0,287	1,63305	4,1579	0,005	0,147	0,135	497,1865	0,152	0,068137931
Cranes	2017	1001	9999	Cranes_2017_9999	0,181003	0,152	0,97429	2,32212	0,005	0,057	0,053	498,2798	0,153	0,068586207
Cranes	2018	26	50	Cranes_2018_50	2,466121	2,072	7,24744	6,00385	0,005	0,624	0,574	538,1219	0,168	0,075310345
Cranes	2018	51	120	Cranes_2018_120	1,108698	0,932	4,45237	7,93075	0,005	0,583	0,536	488,1172	0,152	0,068137931
Cranes	2018	121	175	Cranes_2018_175	0,739223	0,621	3,66571	6,5572	0,005	0,351	0,323	493,0451	0,153	0,068586207
Cranes	2018	176	250	Cranes_2018_250	0,574877	0,483	2,13445	5,77298	0,005	0,25	0,23	491,4069	0,153	0,068586207
Cranes	2018	251	500	Cranes_2018_500	0,440014	0,37	3,1871	4,63433	0,005	0,187	0,172	490,8912	0,153	0,068586207
Cranes	2018	501	750	Cranes_2018_750	0,322048	0,271	1,61304	3,7688	0,005	0,137	0,126	489,0536	0,152	0,068137931
Cranes	2018	1001	9999	Cranes_2018_9999	0,193147	0,162	0,98282	2,33544	0,005	0,058	0,054	490,4122	0,153	0,068586207
Cranes	2019	26	50	Cranes_2019_50	2,434147	2,045	7,24465	5,95197	0,005	0,615	0,566	529,4626	0,168	0,075310345
Cranes	2019	51	120	Cranes_2019_120	0,955908	0,803	4,26491	6,95786	0,005	0,5	0,46	480,3251	0,152	0,068137931
Cranes	2019	121	175	Cranes_2019_175	0,675554	0,568	3,5982	5,94857	0,005	0,318	0,292	485,1817	0,154	0,069034483
Cranes	2019	176	250	Cranes_2019_250	0,50769	0,427	1,94079	5,0842	0,005	0,216	0,198	483,4616	0,153	0,068586207
Cranes	2019	251	500	Cranes_2019_500	0,415431	0,349	2,96893	4,29654	0,005	0,173	0,159	483,1422	0,153	0,068586207
Cranes	2019	501	750	Cranes_2019_750	0,299943	0,252	1,44568	3,42803	0,005	0,124	0,114	481,1192	0,152	0,068137931
Cranes	2019	1001	9999	Cranes_2019_9999	0,205078	0,172	0,9912	2,34854	0,005	0,059	0,055	482,5446	0,153	0,068586207
Cranes	2020	26	50	Cranes_2020_50	2,47956	2,084	7,37625	5,98471	0,005	0,624	0,574	517,9263	0,168	0,075310345
Cranes	2020	51	120	Cranes_2020_120	0,871016	0,732	4,17141	6,38117	0,005	0,453	0,417	469,8821	0,152	0,068137931
Cranes	2020	121	175	Cranes_2020_175	0,638941	0,537	3,56232	5,5697	0,005	0,298	0,274	474,5939	0,153	0,068586207
Cranes	2020	176	250	Cranes_2020_250	0,45669	0,384	1,7904	4,56329	0,005	0,188	0,173	472,9488	0,153	0,068586207
Cranes	2020	251	500	Cranes_2020_500	0,381547	0,321	2,66037	3,86243	0,005	0,155	0,142	472,5579	0,153	0,068586207
Cranes	2020	501	750	Cranes_2020_750	0,287724	0,242	1,44353	3,10471	0,005	0,116	0,107	470,4254	0,152	0,068137931
Cranes	2020	1001	9999	Cranes_2020_9999	0,216797	0,182	0,99943	2,3614	0,005	0,06	0,056	472,0545	0,153	0,068586207
Cranes	2021	26	50	Cranes_2021_50	2,516467	2,115	7,48883	6,01375	0,005	0,631	0,581	517,8995	0,167	0,074862069
Cranes	2021	51	120	Cranes_2021_120	0,77522	0,651	4,06507	5,73085	0,005	0,398	0,366	469,8867	0,152	0,068137931
Cranes	2021	121	175	Cranes_2021_175	0,593174	0,498	3,51648	5,1125	0,005	0,273	0,251	474,5458	0,153	0,068586207
Cranes	2021	176	250	Cranes_2021_250	0,415905	0,349	1,67824	4,10439	0,005	0,167	0,153	472,9057	0,153	0,068586207
Cranes	2021	251	500	Cranes_2021_500	0,351498	0,295	2,44833	3,44253	0,005	0,139	0,127	472,4553	0,153	0,068586207
Cranes	2021	501	750	Cranes_2021_750	0,271141	0,228	1,43956	2,72739	0,005	0,107	0,098	470,5495	0,152	0,068137931
Cranes	2021	1001	9999	Cranes_2021_9999	0,228304	0,192	1,00751	2,37402	0,005	0,061	0,056	472,0545	0,153	0,068586207
Cranes	2022	26	50	Cranes_2022_50	2,41359	2,028	7,36828	5,8991	0,005	0,603	0,555	517,8722	0,167	0,074862069
Cranes	2022	51	120	Cranes_2022_120	0,687651	0,578	3,97198	5,14893	0,005	0,346	0,318	469,9929	0,152	0,068137931
Cranes	2022	121	175	Cranes_2022_175	0,543527	0,457	3,4753	4,6169	0,005	0,246	0,227	474,5887	0,153	0,068586207
Cranes	2022	176	250	Cranes_2022_250	0,375691	0,316	1,60164	3,54149	0,005	0,147	0,135	472,9832	0,153	0,068586207
Cranes	2022	251	500	Cranes_2022_500	0,31051	0,261	2,21201	2,89369	0,005	0,117	0,108	472,1806	0,153	0,068586207
Cranes	2022	501	750	Cranes_2022_750	0,238348	0,2	1,28309	2,25087	0,005	0,089	0,082	470,4755	0,152	0,068137931
Cranes	2022	1001	9999	Cranes_2022_9999	0,239599	0,201	1,01544	2,38641	0,005	0,062	0,057	472,0545	0,153	0,068586207
Cranes	2023	26	50	Cranes_2023_50	2,435567	2,047	7,45254	5,9225	0,005	0,608	0,559	517,8722	0,167	0,074862069
Cranes	2023	51	120	Cranes_2023_120	0,656595	0,552	3,9444	4,87461	0,005	0,323	0,297	469,8891	0,152	0,068137931
Cranes	2023	121	175	Cranes_2023_175	0,503663	0,423	3,44284	4,22184	0,005	0,224	0,206	474,595	0,153	0,068586207
Cranes	2023	176	250	Cranes_2023_250	0,353966	0,297	1,55262	3,22938	0,005	0,135	0,124	472,9738	0,153	0,068586207
Cranes	2023	251	500	Cranes_2023_500	0,281202	0,236	2,01	2,5105	0,005	0,102	0,093	472,294	0,153	0,068586207

Cranes	2023	501	750	Cranes_2023_750	0,23207	0,195	1,28213	2,07257	0,005	0,084	0,077	470,2508	0,152	0,068137931
Cranes	2023	1001	9999	Cranes_2023_9999	0,250681	0,211	1,02322	2,39857	0,005	0,063	0,058	472,0545	0,153	0,068586207
Cranes	2024	26	50	Cranes_2024_50	2,304795	1,937	7,26852	5,78796	0,005	0,577	0,531	517,8722	0,167	0,074862069
Cranes	2024	51	120	Cranes_2024_120	0,623876	0,524	3,90649	4,61888	0,005	0,301	0,277	469,9032	0,152	0,068137931
Cranes	2024	121	175	Cranes_2024_175	0,453764	0,381	3,3893	3,7029	0,005	0,196	0,18	474,6358	0,154	0,069034483
Cranes	2024	176	250	Cranes_2024_250	0,334159	0,281	1,50208	2,96596	0,005	0,123	0,114	472,9638	0,153	0,068586207
Cranes	2024	251	500	Cranes_2024_500	0,274315	0,231	1,93263	2,38291	0,005	0,096	0,089	472,0664	0,153	0,068586207
Cranes	2024	501	750	Cranes_2024_750	0,227031	0,191	1,28334	1,89979	0,005	0,08	0,073	470,3306	0,152	0,068137931
Cranes	2024	1001	9999	Cranes_2024_9999	0,261551	0,22	1,03085	2,4105	0,005	0,064	0,059	472,0545	0,153	0,068586207
Cranes	2025	26	50	Cranes_2025_50	2,155227	1,811	7,07168	5,63562	0,005	0,543	0,499	517,8722	0,167	0,074862069
Cranes	2025	51	120	Cranes_2025_120	0,551396	0,463	3,83081	4,13532	0,005	0,26	0,24	469,5332	0,152	0,068137931
Cranes	2025	121	175	Cranes_2025_175	0,397698	0,334	3,33544	3,16038	0,005	0,166	0,153	474,7477	0,154	0,069034483
Cranes	2025	176	250	Cranes_2025_250	0,31508	0,265	1,4697	2,68128	0,005	0,114	0,105	472,9798	0,153	0,068586207
Cranes	2025	251	500	Cranes_2025_500	0,259914	0,218	1,83363	2,15424	0,005	0,088	0,081	471,9671	0,153	0,068586207
Cranes	2025	501	750	Cranes_2025_750	0,204336	0,172	1,27366	1,63763	0,005	0,068	0,062	470,2756	0,152	0,068137931
Cranes	2025	1001	9999	Cranes_2025_9999	0,272209	0,229	1,03833	2,42219	0,005	0,065	0,06	472,0545	0,153	0,068586207
Cranes	2030	26	50	Cranes_2030_50	1,788	0,684	5,366	3,598	0,007	0,075	0,075	568,299	0,061	0,027344828
Cranes	2030	51	120	Cranes_2030_120	1,941	0,343	3,812	1,987	0,006	0,067	0,067	568,299	0,03	0,013448276
Cranes	2030	121	175	Cranes_2030_175	2,293	0,253	3,356	0,916	0,006	0,042	0,042	568,299	0,022	0,009862069
Cranes	2030	176	250	Cranes_2030_250	2,835	0,224	1,147	0,748	0,006	0,024	0,024	568,299	0,02	0,008965517
Cranes	2030	251	500	Cranes_2030_500	4,512	0,222	1,09	0,697	0,005	0,023	0,023	568,299	0,02	0,008965517
Cranes	2030	501	750	Cranes_2030_750	7,602	0,222	1,09	0,709	0,005	0,024	0,024	568,3	0,02	0,008965517
Cranes	2030	1001	9999	Cranes_2030_9999	26,83	0,245	1,108	2,8	0,005	0,043	0,043	568,299	0,022	0,009862069
Cranes	2035	26	50	Cranes_2035_50	1,568	0,6	5,292	3,401	0,007	0,039	0,039	568,299	0,054	0,024206897
Cranes	2035	51	120	Cranes_2035_120	1,696	0,3	3,801	1,676	0,006	0,036	0,036	568,3	0,027	0,012103448
Cranes	2035	121	175	Cranes_2035_175	1,923	0,212	3,357	0,519	0,006	0,024	0,024	568,299	0,019	0,008517241
Cranes	2035	176	250	Cranes_2035_250	2,568	0,203	1,143	0,463	0,006	0,016	0,016	568,299	0,018	0,008068966
Cranes	2035	251	500	Cranes_2035_500	4,111	0,202	1,087	0,441	0,005	0,016	0,016	568,299	0,018	0,008068966
Cranes	2035	501	750	Cranes_2035_750	6,923	0,202	1,087	0,446	0,005	0,016	0,016	568,299	0,018	0,008068966
Cranes	2035	1001	9999	Cranes_2035_9999	22,949	0,209	1,089	2,618	0,005	0,031	0,031	568,299	0,018	0,008068966
Cranes	2040	26	50	Cranes_2040_50	1,483	0,567	5,268	3,324	0,007	0,024	0,024	568,299	0,051	0,022862069
Cranes	2040	51	120	Cranes_2040_120	1,598	0,282	3,797	1,552	0,006	0,021	0,021	568,299	0,025	0,011206897
Cranes	2040	121	175	Cranes_2040_175	1,79	0,197	3,358	0,371	0,006	0,016	0,016	568,299	0,017	0,00762069
Cranes	2040	176	250	Cranes_2040_250	2,465	0,195	1,144	0,344	0,006	0,013	0,013	568,299	0,017	0,00762069
Cranes	2040	251	500	Cranes_2040_500	3,958	0,195	1,087	0,34	0,005	0,013	0,013	568,299	0,017	0,00762069
Cranes	2040	501	750	Cranes_2040_750	6,661	0,195	1,087	0,341	0,005	0,013	0,013	568,299	0,017	0,00762069
Cranes	2040	1001	9999	Cranes_2040_9999	21,703	0,198	1,087	2,534	0,005	0,027	0,027	568,299	0,017	0,00762069
Crawler Tractors	1990	26	50	Crawler Tractors_1990_50	11,254	4,903	9,907	7,983	0,871	1,291	1,291	568,299	0,442	0,198137931
Crawler Tractors	1990	51	120	Crawler Tractors_1990_120	14,413	2,374	5,73	14,967	0,791	1,353	1,353	568,299	0,214	0,095931034
Crawler Tractors	1990	121	175	Crawler Tractors_1990_175	19,335	1,729	5,079	13,979	0,758	0,962	0,962	568,299	0,156	0,069931034
Crawler Tractors	1990	176	250	Crawler Tractors_1990_250	26,505	1,729	5,079	13,979	0,758	0,962	0,962	568,299	0,156	0,069931034
Crawler Tractors	1990	251	500	Crawler Tractors_1990_500	36,545	1,528	11,319	13,238	0,662	0,822	0,822	568,3	0,137	0,061413793
Crawler Tractors	1990	501	750	Crawler Tractors_1990_750	65,509	1,528	11,319	13,238	1,018	0,837	0,837	568,299	0,137	0,061413793
Crawler Tractors	1990	751	1000	Crawler Tractors_1990_1000	92,189	1,518	11,319	13,238	1,018	0,826	0,826	568,299	0,137	0,061413793
Crawler Tractors	2000	26	50	Crawler Tractors_2000_50	10,858	4,73	9,675	7,197	0,066	0,973	0,973	568,299	0,426	0,190965517
Crawler Tractors	2000	51	120	Crawler Tractors_2000_120	11,94	1,966	4,886	11,097	0,06	0,949	0,949	568,299	0,177	0,079344828
Crawler Tractors	2000	121	175	Crawler Tractors_2000_175	14,976	1,339	4,018	10,157	0,057	0,57	0,57	568,3	0,12	0,053793103
Crawler Tractors	2000	176	250	Crawler Tractors_2000_250	17,901	1,168	3,367	9,863	0,057	0,486	0,486	568,299	0,105	0,047068966
Crawler Tractors	2000	251	500	Crawler Tractors_2000_500	25,11	1,049	5,849	9,341	0,05	0,424	0,424	568,299	0,094	0,042137931
Crawler Tractors	2000	501	750	Crawler Tractors_2000_750	45,011	1,049	5,849	9,341	0,052	0,424	0,424	568,299	0,094	0,042137931
Crawler Tractors	2000	751	1000	Crawler Tractors_2000_1000	66,528	1,095	6,349	9,844	0,052	0,407	0,407	568,299	0,098	0,043931034
Crawler Tractors	2005	26	50	Crawler Tractors_2005_50	9,923	4,323	9,124	6,809	0,066	0,919	0,919	568,299	0,39	0,174827586
Crawler Tractors	2005	51	120	Crawler Tractors_2005_120	10,68	1,759	4,63	9,75	0,06	0,903	0,903	568,299	0,158	0,070827586
Crawler Tractors	2005	121	175	Crawler Tractors_2005_175	13,006	1,163	3,749	8,886	0,057	0,513	0,513	568,299	0,104	0,04662069
Crawler Tractors	2005	176	250	Crawler Tractors_2005_250	13,95	0,91	2,557	8,523	0,057	0,371	0,371	568,299	0,082	0,036758621
Crawler Tractors	2005	251	500	Crawler Tractors_2005_500	19,249	0,804	3,945	7,791	0,05	0,326	0,326	568,299	0,072	0,032275862
Crawler Tractors	2005	501	750	Crawler Tractors_2005_750	34,852	0,813	3,938	7,93	0,052	0,328	0,328	568,299	0,073	0,032724138
Crawler Tractors	2005	751	1000	Crawler Tractors_2005_1000	54,011	0,889	4,359	8,804	0,052	0,319	0,319	568,3	0,08	0,035862069
Crawler Tractors	2010	26	50	Crawler Tractors_2010_50	3,193884	2,684	8,18872	6,54779	0,005	0,785	0,722	572,972	0,167	0,074862069
Crawler Tractors	2010	51	120	Crawler Tractors_2010_120	1,069208	0,898	4,10668	7,76656	0,005	0,628	0,578	530,0152	0,154	0,069034483
Crawler Tractors	2010	121	175	Crawler Tractors_2010_175	0,755513	0,635	3,40812	7,15822	0,005	0,378	0,348	524,4997	0,153	0,068586207
Crawler Tractors	2010	176	250	Crawler Tractors_2010_250	0,540569	0,454	1,89919	6,46768	0,005	0,249	0,229	526,1431	0,153	0,068586207
Crawler Tractors	2010	251	500	Crawler Tractors_2010_500	0,491926	0,413	3,0665	5,96739	0,005	0,227	0,209	528,681	0,154	0,069034483
Crawler Tractors	2010	501	750	Crawler Tractors_2010_750	0,418044	0,351	1,75694	5,31967	0,005	0,189	0,174	525,9395	0,153	0,068586207
Crawler Tractors	2010	751	1000	Crawler Tractors_2010_1000	0,545095	0,458	2,04187	7,25547	0,005	0,21	0,193	527,6019	0,154	0,069034483
Crawler Tractors	2011	26	50	Crawler Tractors_2011_50	3,090465	2,597	8,06059	6,48764	0,005	0,762	0,701	571,2544	0,167	0,074862069
Crawler Tractors	2011	51	120	Crawler Tractors_2011_120	1,055307	0,887	4,11149	7,65924	0,005	0,624	0,574	528,5468	0,154	0,069034483
Crawler Tractors	2011	121	175	Crawler Tractors_2011_175	0,753531	0,633	3,422	7,0937	0,005	0,378	0,347	523,1105	0,153	0,068586207
Crawler Tractors	2011	176	250	Crawler Tractors_2011_250	0,541549	0,455	1,8844	6,42306	0,005	0,248	0,228	524,8932	0,153	0,068586207
Crawler Tractors	2011	251	500	Crawler Tractors_2011_500	0,494702	0,416	3,04503	5,91443	0,005	0,226	0,208	527,4003	0,154	0,069034483
Crawler Tractors	2011	501	750	Crawler Tractors_2011_750	0,416615	0,35	1,70832	5,23606	0,005	0,186	0,171	524,9577	0,153	0,068586207
Crawler Tractors	2011	751	1000	Crawler Tractors_2011_1000	0,550612	0,463	2,05264	7,30105	0,005	0,212	0,195	526,3508	0,154	0,069034483

Crawler Tractors	2012	26	50	Crawler Tractors_2012_50	3,127964	2,628	8,16399	6,51312	0,005	0,77	0,708	569,8895	0,167	0,074862069
Crawler Tractors	2012	51	120	Crawler Tractors_2012_120	1,066067	0,896	4,14375	7,67928	0,005	0,633	0,582	527,2248	0,154	0,069034483
Crawler Tractors	2012	121	175	Crawler Tractors_2012_175	0,762695	0,641	3,4484	7,11308	0,005	0,382	0,351	521,7707	0,153	0,068586207
Crawler Tractors	2012	176	250	Crawler Tractors_2012_250	0,549863	0,462	1,8924	6,43904	0,005	0,25	0,23	523,5287	0,153	0,068586207
Crawler Tractors	2012	251	500	Crawler Tractors_2012_500	0,502104	0,422	3,05662	5,9107	0,005	0,227	0,209	526,0223	0,154	0,069034483
Crawler Tractors	2012	501	750	Crawler Tractors_2012_750	0,425611	0,358	1,71661	5,25574	0,005	0,189	0,173	523,7088	0,153	0,068586207
Crawler Tractors	2012	751	1000	Crawler Tractors_2012_1000	0,555874	0,467	2,06265	7,34463	0,005	0,214	0,197	525,1067	0,154	0,069034483
Crawler Tractors	2013	26	50	Crawler Tractors_2013_50	3,060938	2,572	8,10275	6,42928	0,005	0,753	0,692	567,3537	0,167	0,074862069
Crawler Tractors	2013	51	120	Crawler Tractors_2013_120	1,067402	0,897	4,16448	7,64718	0,005	0,636	0,585	524,5941	0,154	0,069034483
Crawler Tractors	2013	121	175	Crawler Tractors_2013_175	0,758762	0,638	3,4566	7,02367	0,005	0,38	0,349	519,0712	0,153	0,068586207
Crawler Tractors	2013	176	250	Crawler Tractors_2013_250	0,548046	0,461	1,8715	6,36771	0,005	0,247	0,227	520,7236	0,153	0,068586207
Crawler Tractors	2013	251	500	Crawler Tractors_2013_500	0,501212	0,421	2,99715	5,82738	0,005	0,225	0,207	523,5592	0,154	0,069034483
Crawler Tractors	2013	501	750	Crawler Tractors_2013_750	0,418079	0,351	1,67885	5,09878	0,005	0,183	0,168	520,5693	0,153	0,068586207
Crawler Tractors	2013	751	1000	Crawler Tractors_2013_1000	0,560878	0,471	2,07187	7,3862	0,005	0,216	0,199	522,5513	0,154	0,069034483
Crawler Tractors	2014	26	50	Crawler Tractors_2014_50	3,000333	2,521	8,04733	6,39578	0,005	0,743	0,684	564,5641	0,167	0,074862069
Crawler Tractors	2014	51	120	Crawler Tractors_2014_120	1,051605	0,884	4,16815	7,52434	0,005	0,628	0,578	522,1187	0,154	0,069034483
Crawler Tractors	2014	121	175	Crawler Tractors_2014_175	0,748303	0,629	3,45911	6,87548	0,005	0,374	0,344	516,4039	0,153	0,068586207
Crawler Tractors	2014	176	250	Crawler Tractors_2014_250	0,54035	0,454	1,83765	6,23751	0,005	0,241	0,222	518,0363	0,153	0,068586207
Crawler Tractors	2014	251	500	Crawler Tractors_2014_500	0,490461	0,412	2,91108	5,61601	0,005	0,217	0,2	520,5153	0,154	0,069034483
Crawler Tractors	2014	501	750	Crawler Tractors_2014_750	0,412689	0,347	1,67523	4,89468	0,005	0,179	0,164	517,8612	0,153	0,068586207
Crawler Tractors	2014	751	1000	Crawler Tractors_2014_1000	0,565619	0,475	2,08028	7,42576	0,005	0,218	0,201	520,0052	0,154	0,069034483
Crawler Tractors	2015	26	50	Crawler Tractors_2015_50	2,990271	2,513	8,07628	6,37736	0,005	0,741	0,682	558,8878	0,167	0,074862069
Crawler Tractors	2015	51	120	Crawler Tractors_2015_120	1,05262	0,884	4,18907	7,4938	0,005	0,63	0,58	516,8433	0,154	0,069034483
Crawler Tractors	2015	121	175	Crawler Tractors_2015_175	0,751623	0,632	3,47922	6,84937	0,005	0,376	0,346	511,3059	0,153	0,068586207
Crawler Tractors	2015	176	250	Crawler Tractors_2015_250	0,536796	0,451	1,81586	6,14312	0,005	0,237	0,218	512,8973	0,153	0,068586207
Crawler Tractors	2015	251	500	Crawler Tractors_2015_500	0,485596	0,408	2,84505	5,48324	0,005	0,212	0,195	515,3725	0,154	0,069034483
Crawler Tractors	2015	501	750	Crawler Tractors_2015_750	0,41802	0,351	1,66415	4,88301	0,005	0,179	0,165	512,5402	0,153	0,068586207
Crawler Tractors	2015	751	1000	Crawler Tractors_2015_1000	0,570092	0,479	2,08783	7,46329	0,005	0,22	0,202	514,83	0,154	0,069034483
Crawler Tractors	2016	26	50	Crawler Tractors_2016_50	2,99791	2,519	8,10441	6,31718	0,005	0,733	0,674	553,214	0,167	0,074862069
Crawler Tractors	2016	51	120	Crawler Tractors_2016_120	1,034441	0,869	4,18548	7,34589	0,005	0,619	0,57	511,268	0,154	0,069034483
Crawler Tractors	2016	121	175	Crawler Tractors_2016_175	0,743125	0,624	3,48211	6,7205	0,005	0,371	0,341	506,0335	0,153	0,068586207
Crawler Tractors	2016	176	250	Crawler Tractors_2016_250	0,534039	0,449	1,80295	6,04745	0,005	0,233	0,215	507,355	0,153	0,068586207
Crawler Tractors	2016	251	500	Crawler Tractors_2016_500	0,473782	0,398	2,74397	5,27907	0,005	0,205	0,188	510,3385	0,154	0,069034483
Crawler Tractors	2016	501	750	Crawler Tractors_2016_750	0,41158	0,346	1,6206	4,7238	0,005	0,174	0,16	507,2527	0,153	0,068586207
Crawler Tractors	2016	751	1000	Crawler Tractors_2016_1000	0,57429	0,483	2,09448	7,4988	0,005	0,222	0,204	509,6671	0,154	0,069034483
Crawler Tractors	2017	26	50	Crawler Tractors_2017_50	2,926516	2,459	8,00596	6,20834	0,005	0,712	0,655	544,6762	0,167	0,074862069
Crawler Tractors	2017	51	120	Crawler Tractors_2017_120	1,010844	0,849	4,17611	7,141	0,005	0,604	0,555	503,2791	0,154	0,069034483
Crawler Tractors	2017	121	175	Crawler Tractors_2017_175	0,731209	0,614	3,48322	6,55188	0,005	0,364	0,335	498,1245	0,153	0,068586207
Crawler Tractors	2017	176	250	Crawler Tractors_2017_250	0,511144	0,43	1,7418	5,75969	0,005	0,22	0,202	499,832	0,153	0,068586207
Crawler Tractors	2017	251	500	Crawler Tractors_2017_500	0,458057	0,385	2,6349	5,02932	0,005	0,195	0,179	502,422	0,154	0,069034483
Crawler Tractors	2017	501	750	Crawler Tractors_2017_750	0,386074	0,324	1,5221	4,36108	0,005	0,16	0,147	499,1046	0,153	0,068586207
Crawler Tractors	2017	751	1000	Crawler Tractors_2017_1000	0,578206	0,486	2,10018	7,53226	0,005	0,223	0,205	501,8777	0,154	0,069034483
Crawler Tractors	2018	26	50	Crawler Tractors_2018_50	2,910335	2,445	8,0094	6,16323	0,005	0,704	0,647	536,1409	0,167	0,074862069
Crawler Tractors	2018	51	120	Crawler Tractors_2018_120	0,949614	0,798	4,1231	6,72257	0,005	0,566	0,52	494,9217	0,154	0,069034483
Crawler Tractors	2018	121	175	Crawler Tractors_2018_175	0,660412	0,555	3,42131	5,8588	0,005	0,325	0,299	490,0002	0,153	0,068586207
Crawler Tractors	2018	176	250	Crawler Tractors_2018_250	0,473989	0,398	1,65354	5,28959	0,005	0,2	0,184	491,606	0,153	0,068586207
Crawler Tractors	2018	251	500	Crawler Tractors_2018_500	0,409351	0,344	2,38218	4,37324	0,005	0,169	0,156	493,5104	0,154	0,069034483
Crawler Tractors	2018	501	750	Crawler Tractors_2018_750	0,351876	0,296	1,4447	3,8336	0,005	0,141	0,13	491,2659	0,153	0,068586207
Crawler Tractors	2018	751	1000	Crawler Tractors_2018_1000	0,581827	0,489	2,10483	7,56366	0,005	0,225	0,207	494,1052	0,154	0,069034483
Crawler Tractors	2019	26	50	Crawler Tractors_2019_50	2,648469	2,225	7,58896	5,85476	0,005	0,64	0,589	525,9767	0,166	0,074413793
Crawler Tractors	2019	51	120	Crawler Tractors_2019_120	0,901167	0,757	4,08842	6,39347	0,005	0,535	0,492	486,9909	0,154	0,069034483
Crawler Tractors	2019	121	175	Crawler Tractors_2019_175	0,615173	0,517	3,37886	5,38191	0,005	0,3	0,276	481,6222	0,152	0,068137931
Crawler Tractors	2019	176	250	Crawler Tractors_2019_250	0,45175	0,38	1,60445	4,9721	0,005	0,187	0,172	483,4489	0,153	0,068586207
Crawler Tractors	2019	251	500	Crawler Tractors_2019_500	0,37933	0,319	2,21938	3,93412	0,005	0,153	0,141	485,8645	0,154	0,069034483
Crawler Tractors	2019	501	750	Crawler Tractors_2019_750	0,316919	0,266	1,35585	3,34253	0,005	0,123	0,113	483,3879	0,153	0,068586207
Crawler Tractors	2019	751	1000	Crawler Tractors_2019_1000	0,547243	0,46	2,02037	7,21215	0,005	0,211	0,194	486,2545	0,154	0,069034483
Crawler Tractors	2020	26	50	Crawler Tractors_2020_50	2,443056	2,053	7,3	5,64276	0,005	0,591	0,544	515,679	0,167	0,074862069
Crawler Tractors	2020	51	120	Crawler Tractors_2020_120	0,850709	0,715	4,04412	6,00933	0,005	0,5	0,46	476,3284	0,154	0,069034483
Crawler Tractors	2020	121	175	Crawler Tractors_2020_175	0,566576	0,476	3,33989	4,87226	0,005	0,272	0,25	471,015	0,152	0,068137931
Crawler Tractors	2020	176	250	Crawler Tractors_2020_250	0,428471	0,36	1,55491	4,63225	0,005	0,175	0,161	472,941	0,153	0,068586207
Crawler Tractors	2020	251	500	Crawler Tractors_2020_500	0,358593	0,301	2,0875	3,62175	0,005	0,141	0,13	475,2338	0,154	0,069034483
Crawler Tractors	2020	501	750	Crawler Tractors_2020_750	0,304872	0,256	1,31018	3,13716	0,005	0,115	0,106	473,3119	0,153	0,068586207
Crawler Tractors	2020	751	1000	Crawler Tractors_2020_1000	0,551035	0,463	2,02764	7,23682	0,005	0,212	0,195	475,6525	0,154	0,069034483
Crawler Tractors	2021	26	50	Crawler Tractors_2021_50	2,456387	2,064	7,34869	5,61511	0,005	0,591	0,543	516,1077	0,167	0,074862069
Crawler Tractors	2021	51	120	Crawler Tractors_2021_120	0,800723	0,673	4,00549	5,65746	0,005	0,466	0,428	476,437	0,154	0,069034483
Crawler Tractors	2021	121	175	Crawler Tractors_2021_175	0,518367	0,436	3,30982	4,3947	0,005	0,245	0,225	471,421	0,152	0,068137931
Crawler Tractors	2021	176	250	Crawler Tractors_2021_250	0,407794	0,343	1,51456	4,33394	0,005	0,163	0,15	472,9246	0,153	0,068586207
Crawler Tractors	2021	251	500	Crawler Tractors_2021_500	0,337066	0,283	2,02434	3,27633	0,005	0,129	0,119	474,4843	0,153	0,068586207
Crawler Tractors	2021	501	750	Crawler Tractors_2021_750	0,284829	0,239	1,26985	2,82478	0,005	0,104	0,095	473,0941	0,153	0,068586207
Crawler Tractors	2021	751	1000	Crawler Tractors_2021_1000	0,475256	0,399	1,89563	6,3992	0,005	0,182	0,167	471,8224	0,153	0,068586207
Crawler Tractors	2022	26	50	Crawler Tractors_2022_50	2,25944	1,899	7,04118	5,37962	0,005	0,539	0,496	516,1476	0,167	0,074862069
Crawler Tractors	2022	51	120	Crawler Tractors_2022_120	0,714244	0,6	3,92498	5,10103	0,005	0,408	0,375	476,0219	0,154	0,069034483
Crawler Tractors	2022	121	175	Crawler Tractors_2022_175	0,463094	0,389	3,26382	3,82659	0,005	0,214	0,197	471,5674	0,153	0,068586207

Crawler Tractors	2022	176	250	Crawler Tractors_2022_250	0,364117	0,306	1,43975	3,73672	0,005	0,141	0,13	472,0975	0,153	0,068586207
Crawler Tractors	2022	251	500	Crawler Tractors_2022_500	0,30258	0,254	1,91628	2,74435	0,005	0,111	0,102	474,4115	0,153	0,068586207
Crawler Tractors	2022	501	750	Crawler Tractors_2022_750	0,235465	0,198	1,18638	2,12552	0,005	0,079	0,073	472,876	0,153	0,068586207
Crawler Tractors	2022	751	1000	Crawler Tractors_2022_1000	0,424397	0,357	1,73227	5,92299	0,005	0,162	0,149	470,7007	0,152	0,068137931
Crawler Tractors	2023	26	50	Crawler Tractors_2023_50	2,228685	1,873	7,02687	5,32514	0,005	0,526	0,484	516,1587	0,167	0,074862069
Crawler Tractors	2023	51	120	Crawler Tractors_2023_120	0,663952	0,558	3,88936	4,76208	0,005	0,373	0,343	476,1575	0,154	0,069034483
Crawler Tractors	2023	121	175	Crawler Tractors_2023_175	0,41309	0,347	3,23526	3,33004	0,005	0,185	0,17	471,7805	0,153	0,068586207
Crawler Tractors	2023	176	250	Crawler Tractors_2023_250	0,328767	0,276	1,39549	3,18735	0,005	0,124	0,114	471,6244	0,153	0,068586207
Crawler Tractors	2023	251	500	Crawler Tractors_2023_500	0,286276	0,241	1,85216	2,47635	0,005	0,102	0,094	474,6128	0,153	0,068586207
Crawler Tractors	2023	501	750	Crawler Tractors_2023_750	0,218505	0,184	1,15892	1,86667	0,005	0,069	0,064	472,5297	0,153	0,068586207
Crawler Tractors	2023	751	1000	Crawler Tractors_2023_1000	0,319268	0,268	1,6104	4,76968	0,005	0,118	0,109	473,6655	0,153	0,068586207
Crawler Tractors	2024	26	50	Crawler Tractors_2024_50	2,089827	1,756	6,68497	4,97522	0,005	0,466	0,429	515,4658	0,167	0,074862069
Crawler Tractors	2024	51	120	Crawler Tractors_2024_120	0,610839	0,513	3,85173	4,40892	0,005	0,335	0,309	476,2342	0,154	0,069034483
Crawler Tractors	2024	121	175	Crawler Tractors_2024_175	0,387606	0,326	3,22706	3,04107	0,005	0,17	0,157	471,8291	0,153	0,068586207
Crawler Tractors	2024	176	250	Crawler Tractors_2024_250	0,313897	0,264	1,36992	2,95319	0,005	0,115	0,105	471,8603	0,153	0,068586207
Crawler Tractors	2024	251	500	Crawler Tractors_2024_500	0,271114	0,228	1,77984	2,2441	0,005	0,093	0,085	474,025	0,153	0,068586207
Crawler Tractors	2024	501	750	Crawler Tractors_2024_750	0,215283	0,181	1,15921	1,76658	0,005	0,066	0,061	472,2827	0,153	0,068586207
Crawler Tractors	2024	751	1000	Crawler Tractors_2024_1000	0,313081	0,263	1,58774	4,68945	0,005	0,115	0,106	474,6448	0,154	0,069034483
Crawler Tractors	2025	26	50	Crawler Tractors_2025_50	2,075042	1,744	6,68642	4,93567	0,005	0,456	0,42	516,1279	0,167	0,074862069
Crawler Tractors	2025	51	120	Crawler Tractors_2025_120	0,540303	0,454	3,78839	3,96126	0,005	0,285	0,262	476,1336	0,154	0,069034483
Crawler Tractors	2025	121	175	Crawler Tractors_2025_175	0,354345	0,298	3,20909	2,68768	0,005	0,15	0,138	471,5923	0,153	0,068586207
Crawler Tractors	2025	176	250	Crawler Tractors_2025_250	0,276616	0,232	1,30849	2,46158	0,005	0,096	0,088	471,6224	0,153	0,068586207
Crawler Tractors	2025	251	500	Crawler Tractors_2025_500	0,247477	0,208	1,71697	1,92007	0,005	0,081	0,074	474,0072	0,153	0,068586207
Crawler Tractors	2025	501	750	Crawler Tractors_2025_750	0,198724	0,167	1,12199	1,54452	0,005	0,057	0,052	472,4081	0,153	0,068586207
Crawler Tractors	2025	751	1000	Crawler Tractors_2025_1000	0,308836	0,26	1,59298	4,59799	0,005	0,111	0,103	475,4901	0,154	0,069034483
Crawler Tractors	2030	26	50	Crawler Tractors_2030_50	1,912	0,833	5,605	3,808	0,007	0,116	0,116	568,299	0,075	0,03362069
Crawler Tractors	2030	51	120	Crawler Tractors_2030_120	2,461	0,405	3,871	2,341	0,006	0,105	0,105	568,299	0,036	0,016137931
Crawler Tractors	2030	121	175	Crawler Tractors_2030_175	3,315	0,296	3,397	1,266	0,006	0,065	0,065	568,299	0,026	0,011655172
Crawler Tractors	2030	176	250	Crawler Tractors_2030_250	4,019	0,262	1,207	1,104	0,006	0,04	0,04	568,299	0,023	0,010310345
Crawler Tractors	2030	251	500	Crawler Tractors_2030_500	6,146	0,257	1,2	1,016	0,005	0,038	0,038	568,299	0,023	0,010310345
Crawler Tractors	2030	501	750	Crawler Tractors_2030_750	11,033	0,257	1,2	1,033	0,005	0,038	0,038	568,299	0,023	0,010310345
Crawler Tractors	2030	751	1000	Crawler Tractors_2030_1000	16,147	0,265	1,225	3,094	0,005	0,056	0,056	568,3	0,023	0,010310345
Crawler Tractors	2035	26	50	Crawler Tractors_2035_50	1,626	0,708	5,493	3,558	0,007	0,066	0,066	568,299	0,063	0,028241379
Crawler Tractors	2035	51	120	Crawler Tractors_2035_120	2,099	0,345	3,85	1,922	0,006	0,06	0,06	568,299	0,031	0,013896552
Crawler Tractors	2035	121	175	Crawler Tractors_2035_175	2,772	0,247	3,391	0,794	0,006	0,038	0,038	568,299	0,022	0,009862069
Crawler Tractors	2035	176	250	Crawler Tractors_2035_250	3,521	0,229	1,182	0,695	0,006	0,026	0,026	568,299	0,02	0,008965517
Crawler Tractors	2035	251	500	Crawler Tractors_2035_500	5,432	0,227	1,145	0,657	0,005	0,025	0,025	568,299	0,02	0,008965517
Crawler Tractors	2035	501	750	Crawler Tractors_2035_750	9,744	0,227	1,145	0,664	0,005	0,025	0,025	568,299	0,02	0,008965517
Crawler Tractors	2035	751	1000	Crawler Tractors_2035_1000	14,073	0,231	1,159	2,792	0,005	0,041	0,041	568,299	0,02	0,008965517
Crawler Tractors	2040	26	50	Crawler Tractors_2040_50	1,499	0,653	5,443	3,42	0,007	0,042	0,042	568,299	0,058	0,026
Crawler Tractors	2040	51	120	Crawler Tractors_2040_120	1,924	0,316	3,839	1,709	0,006	0,039	0,039	568,299	0,028	0,012551724
Crawler Tractors	2040	121	175	Crawler Tractors_2040_175	2,48	0,221	3,388	0,539	0,006	0,025	0,025	568,299	0,02	0,008965517
Crawler Tractors	2040	176	250	Crawler Tractors_2040_250	3,247	0,211	1,167	0,491	0,006	0,018	0,018	568,299	0,019	0,008517241
Crawler Tractors	2040	251	500	Crawler Tractors_2040_500	5,035	0,21	1,113	0,47	0,005	0,018	0,018	568,299	0,018	0,008068966
Crawler Tractors	2040	501	750	Crawler Tractors_2040_750	9,03	0,21	1,113	0,475	0,005	0,018	0,018	568,299	0,019	0,008517241
Crawler Tractors	2040	751	1000	Crawler Tractors_2040_1000	12,945	0,213	1,122	2,652	0,005	0,032	0,032	568,299	0,019	0,008517241
Crushing/Proc.Equipment	1990	26	50	Crushing/Proc.Equipment_1990_50	11,643	4,43	9,044	7,809	0,871	1,194	1,194	568,299	0,399	0,178862069
Crushing/Proc.Equipment	1990	51	120	Crushing/Proc.Equipment_1990_120	11,193	2,255	5,547	14,555	0,791	1,258	1,258	568,299	0,203	0,091
Crushing/Proc.Equipment	1990	121	175	Crushing/Proc.Equipment_1990_175	15,383	1,54	4,913	13,086	0,758	0,834	0,834	568,299	0,138	0,061862069
Crushing/Proc.Equipment	1990	176	250	Crushing/Proc.Equipment_1990_250	22,49	1,54	4,913	13,086	0,758	0,834	0,834	568,299	0,138	0,061862069
Crushing/Proc.Equipment	1990	251	500	Crushing/Proc.Equipment_1990_500	30,672	1,374	10,176	12,492	0,662	0,724	0,724	568,299	0,124	0,055586207
Crushing/Proc.Equipment	1990	501	750	Crushing/Proc.Equipment_1990_750	48,337	1,374	10,175	12,492	1,018	0,737	0,737	568,299	0,124	0,055586207
Crushing/Proc.Equipment	1990	1001	9999	Crushing/Proc.Equipment_1990_9999	106,942	1,369	10,175	12,492	1,018	0,731	0,731	568,299	0,123	0,055137931
Crushing/Proc.Equipment	2000	26	50	Crushing/Proc.Equipment_2000_50	10,827	4,12	8,551	6,954	0,066	0,876	0,876	568,299	0,371	0,166310345
Crushing/Proc.Equipment	2000	51	120	Crushing/Proc.Equipment_2000_120	8,945	1,802	4,594	10,363	0,06	0,857	0,857	568,299	0,162	0,07262069
Crushing/Proc.Equipment	2000	121	175	Crushing/Proc.Equipment_2000_175	12,05	1,206	3,737	9,416	0,057	0,506	0,506	568,299	0,108	0,048413793
Crushing/Proc.Equipment	2000	176	250	Crushing/Proc.Equipment_2000_250	14,723	1,008	2,963	9,058	0,057	0,414	0,414	568,299	0,09	0,040344828
Crushing/Proc.Equipment	2000	251	500	Crushing/Proc.Equipment_2000_500	20,487	0,918	5,011	8,658	0,05	0,366	0,366	568,299	0,082	0,036758621
Crushing/Proc.Equipment	2000	501	750	Crushing/Proc.Equipment_2000_750	30,946	0,88	4,658	8,459	0,052	0,348	0,348	568,299	0,079	0,035413793
Crushing/Proc.Equipment	2000	1001	9999	Crushing/Proc.Equipment_2000_9999	77,281	0,989	5,329	9,138	0,052	0,37	0,37	568,299	0,089	0,039896552
Crushing/Proc.Equipment	2005	26	50	Crushing/Proc.Equipment_2005_50	9,624	3,662	7,904	6,477	0,066	0,812	0,812	568,3	0,33	0,147931034
Crushing/Proc.Equipment	2005	51	120	Crushing/Proc.Equipment_2005_120	7,644	1,54	4,24	8,68	0,06	0,794	0,794	568,299	0,138	0,061862069
Crushing/Proc.Equipment	2005	121	175	Crushing/Proc.Equipment_2005_175	10,064	1,007	3,372	7,941	0,057	0,438	0,438	568,299	0,09	0,040344828
Crushing/Proc.Equipment	2005	176	250	Crushing/Proc.Equipment_2005_250	10,399	0,712	1,97	7,484	0,057	0,282	0,282	568,299	0,064	0,028689655
Crushing/Proc.Equipment	2005	251	500	Crushing/Proc.Equipment_2005_500	14,029	0,628	2,549	6,846	0,05	0,252	0,252	568,299	0,056	0,025103448
Crushing/Proc.Equipment	2005	501	750	Crushing/Proc.Equipment_2005_750	22,225	0,632	2,431	6,974	0,052	0,249	0,249	568,299	0,057	0,025551724
Crushing/Proc.Equipment	2005	1001	9999	Crushing/Proc.Equipment_2005_9999	60,257	0,771	3,042	8,054	0,052	0,268	0,268	568,299	0,069	0,030931034
Crushing/Proc.Equipment	2010	26	50	Crushing/Proc.Equipment_2010_50	7,704	2,931	7,22	6,068	0,007	0,671	0,671	568,299	0,264	0,118344828
Crushing/Proc.Equipment	2010	51	120	Crushing/Proc.Equipment_2010_120	5,971	1,203	4,071	7,096	0,006	0,656	0,656	568,299	0,108	0,048413793
Crushing/Proc.Equipment	2010	121	175	Crushing/Proc.Equipment_2010_175	8,033	0,804	3,307	6,322	0,006	0,362	0,362	568,299	0,072	0,032275862
Crushing/Proc.Equipment	2010	176	250	Crushing/Proc.Equipment_2010_250	7,61	0,521	1,446	5,918	0,006	0,195	0,195	568,299	0,047	0,021068966
Crushing/Proc.Equipment	2010	251	500	Crushing/Proc.Equipment_2010_500	10,487	0,47	1,603	5,248	0,005	0,18	0,18	568,299	0,042	0,018827586
Crushing/Proc.Equipment	2010	501	750	Crushing/Proc.Equipment_2010_750	16,814	0,478	1,568	5,449	0,005	0,183	0,183	568,299	0,043	0,019275862

Crushing/Proc.Equipment	2010	1001	9999	Crushing/Proc.Equipment_2010_9999	46,933	0,601	2,091	6,987	0,005	0,209	0,209	568,299	0,054	0,024206897
Crushing/Proc.Equipment	2011	26	50	Crushing/Proc.Equipment_2011_50	7,155	2,722	6,995	5,972	0,007	0,636	0,636	568,299	0,245	0,109827586
Crushing/Proc.Equipment	2011	51	120	Crushing/Proc.Equipment_2011_120	5,588	1,125	4,03	6,704	0,006	0,625	0,625	568,3	0,101	0,045275862
Crushing/Proc.Equipment	2011	121	175	Crushing/Proc.Equipment_2011_175	7,581	0,759	3,294	5,953	0,006	0,347	0,347	568,299	0,068	0,030482759
Crushing/Proc.Equipment	2011	176	250	Crushing/Proc.Equipment_2011_250	7,059	0,483	1,356	5,498	0,006	0,175	0,175	568,299	0,043	0,019275862
Crushing/Proc.Equipment	2011	251	500	Crushing/Proc.Equipment_2011_500	9,796	0,439	1,462	4,858	0,005	0,162	0,162	568,299	0,039	0,017482759
Crushing/Proc.Equipment	2011	501	750	Crushing/Proc.Equipment_2011_750	15,681	0,446	1,435	5,054	0,005	0,165	0,165	568,299	0,04	0,017931034
Crushing/Proc.Equipment	2011	1001	9999	Crushing/Proc.Equipment_2011_9999	44,108	0,564	1,923	6,609	0,005	0,196	0,196	568,299	0,05	0,022413793
Crushing/Proc.Equipment	2012	26	50	Crushing/Proc.Equipment_2012_50	6,538	2,488	6,733	5,867	0,007	0,596	0,596	568,299	0,224	0,100413793
Crushing/Proc.Equipment	2012	51	120	Crushing/Proc.Equipment_2012_120	5,173	1,042	3,984	6,269	0,006	0,582	0,582	568,299	0,094	0,042137931
Crushing/Proc.Equipment	2012	121	175	Crushing/Proc.Equipment_2012_175	7,084	0,709	3,28	5,553	0,006	0,321	0,321	568,299	0,064	0,028689655
Crushing/Proc.Equipment	2012	176	250	Crushing/Proc.Equipment_2012_250	6,627	0,453	1,299	5,088	0,006	0,158	0,158	568,299	0,04	0,017931034
Crushing/Proc.Equipment	2012	251	500	Crushing/Proc.Equipment_2012_500	9,273	0,415	1,362	4,48	0,005	0,147	0,147	568,3	0,037	0,016586207
Crushing/Proc.Equipment	2012	501	750	Crushing/Proc.Equipment_2012_750	14,786	0,42	1,341	4,662	0,005	0,15	0,15	568,299	0,037	0,016586207
Crushing/Proc.Equipment	2012	1001	9999	Crushing/Proc.Equipment_2012_9999	41,105	0,526	1,755	6,197	0,005	0,182	0,182	568,299	0,047	0,021068966
Crushing/Proc.Equipment	2013	26	50	Crushing/Proc.Equipment_2013_50	5,908	2,248	6,467	5,628	0,007	0,545	0,545	568,299	0,202	0,090551724
Crushing/Proc.Equipment	2013	51	120	Crushing/Proc.Equipment_2013_120	4,758	0,958	3,94	5,845	0,006	0,532	0,532	568,299	0,086	0,038551724
Crushing/Proc.Equipment	2013	121	175	Crushing/Proc.Equipment_2013_175	6,588	0,659	3,267	5,177	0,006	0,293	0,293	568,299	0,059	0,026448276
Crushing/Proc.Equipment	2013	176	250	Crushing/Proc.Equipment_2013_250	6,27	0,429	1,26	4,695	0,006	0,144	0,144	568,299	0,038	0,017034483
Crushing/Proc.Equipment	2013	251	500	Crushing/Proc.Equipment_2013_500	8,85	0,396	1,289	4,121	0,005	0,134	0,134	568,299	0,035	0,015689655
Crushing/Proc.Equipment	2013	501	750	Crushing/Proc.Equipment_2013_750	14,055	0,399	1,273	4,285	0,005	0,136	0,136	568,299	0,036	0,016137931
Crushing/Proc.Equipment	2013	1001	9999	Crushing/Proc.Equipment_2013_9999	38,235	0,489	1,599	5,785	0,005	0,168	0,168	568,299	0,044	0,019724138
Crushing/Proc.Equipment	2014	26	50	Crushing/Proc.Equipment_2014_50	5,288	2,012	6,212	5,399	0,007	0,494	0,494	568,299	0,181	0,081137931
Crushing/Proc.Equipment	2014	51	120	Crushing/Proc.Equipment_2014_120	4,356	0,877	3,898	5,468	0,006	0,481	0,481	568,299	0,079	0,035413793
Crushing/Proc.Equipment	2014	121	175	Crushing/Proc.Equipment_2014_175	6,112	0,612	3,256	4,823	0,006	0,265	0,265	568,299	0,055	0,024655172
Crushing/Proc.Equipment	2014	176	250	Crushing/Proc.Equipment_2014_250	5,916	0,405	1,228	4,239	0,006	0,13	0,13	568,299	0,036	0,016137931
Crushing/Proc.Equipment	2014	251	500	Crushing/Proc.Equipment_2014_500	8,415	0,377	1,23	3,702	0,005	0,121	0,121	568,299	0,034	0,015241379
Crushing/Proc.Equipment	2014	501	750	Crushing/Proc.Equipment_2014_750	13,314	0,378	1,218	3,844	0,005	0,123	0,123	568,299	0,034	0,015241379
Crushing/Proc.Equipment	2014	1001	9999	Crushing/Proc.Equipment_2014_9999	35,652	0,456	1,46	5,391	0,005	0,155	0,155	568,299	0,041	0,01837931
Crushing/Proc.Equipment	2015	26	50	Crushing/Proc.Equipment_2015_50	4,722	1,796	5,996	5,195	0,007	0,446	0,446	568,299	0,162	0,07262069
Crushing/Proc.Equipment	2015	51	120	Crushing/Proc.Equipment_2015_120	3,959	0,797	3,859	5,04	0,006	0,43	0,43	568,299	0,071	0,031827586
Crushing/Proc.Equipment	2015	121	175	Crushing/Proc.Equipment_2015_175	5,614	0,562	3,247	4,343	0,006	0,237	0,237	568,299	0,05	0,022413793
Crushing/Proc.Equipment	2015	176	250	Crushing/Proc.Equipment_2015_250	5,585	0,382	1,201	3,801	0,006	0,117	0,117	568,299	0,034	0,015241379
Crushing/Proc.Equipment	2015	251	500	Crushing/Proc.Equipment_2015_500	8	0,358	1,184	3,304	0,005	0,109	0,109	568,299	0,032	0,014344828
Crushing/Proc.Equipment	2015	501	750	Crushing/Proc.Equipment_2015_750	12,614	0,358	1,176	3,422	0,005	0,111	0,111	568,299	0,032	0,014344828
Crushing/Proc.Equipment	2015	1001	9999	Crushing/Proc.Equipment_2015_9999	32,981	0,422	1,343	5,019	0,005	0,14	0,14	568,299	0,038	0,017034483
Crushing/Proc.Equipment	2016	26	50	Crushing/Proc.Equipment_2016_50	4,186	1,593	5,801	5,006	0,007	0,399	0,399	568,299	0,143	0,064103448
Crushing/Proc.Equipment	2016	51	120	Crushing/Proc.Equipment_2016_120	3,576	0,72	3,823	4,631	0,006	0,379	0,379	568,299	0,065	0,029137931
Crushing/Proc.Equipment	2016	121	175	Crushing/Proc.Equipment_2016_175	5,132	0,513	3,241	3,883	0,006	0,21	0,21	568,299	0,046	0,02062069
Crushing/Proc.Equipment	2016	176	250	Crushing/Proc.Equipment_2016_250	5,267	0,36	1,178	3,381	0,006	0,105	0,105	568,299	0,032	0,014344828
Crushing/Proc.Equipment	2016	251	500	Crushing/Proc.Equipment_2016_500	7,601	0,34	1,146	2,928	0,005	0,098	0,098	568,299	0,03	0,013448276
Crushing/Proc.Equipment	2016	501	750	Crushing/Proc.Equipment_2016_750	11,944	0,339	1,14	3,021	0,005	0,099	0,099	568,299	0,03	0,013448276
Crushing/Proc.Equipment	2016	1001	9999	Crushing/Proc.Equipment_2016_9999	31,036	0,397	1,274	4,7	0,005	0,127	0,127	568,299	0,035	0,015689655
Crushing/Proc.Equipment	2017	26	50	Crushing/Proc.Equipment_2017_50	3,684	1,402	5,623	4,827	0,007	0,354	0,354	568,299	0,126	0,056482759
Crushing/Proc.Equipment	2017	51	120	Crushing/Proc.Equipment_2017_120	3,216	0,647	3,791	4,244	0,006	0,33	0,33	568,299	0,058	0,026
Crushing/Proc.Equipment	2017	121	175	Crushing/Proc.Equipment_2017_175	4,681	0,468	3,236	3,45	0,006	0,185	0,185	568,299	0,042	0,018827586
Crushing/Proc.Equipment	2017	176	250	Crushing/Proc.Equipment_2017_250	4,974	0,34	1,16	2,987	0,006	0,094	0,094	568,299	0,03	0,013448276
Crushing/Proc.Equipment	2017	251	500	Crushing/Proc.Equipment_2017_500	7,242	0,324	1,118	2,602	0,005	0,088	0,088	568,299	0,029	0,013
Crushing/Proc.Equipment	2017	501	750	Crushing/Proc.Equipment_2017_750	11,359	0,323	1,114	2,664	0,005	0,088	0,088	568,299	0,029	0,013
Crushing/Proc.Equipment	2017	1001	9999	Crushing/Proc.Equipment_2017_9999	29,544	0,378	1,231	4,423	0,005	0,117	0,117	568,299	0,034	0,015241379
Crushing/Proc.Equipment	2018	26	50	Crushing/Proc.Equipment_2018_50	3,219	1,225	5,461	4,657	0,007	0,31	0,31	568,299	0,11	0,049310345
Crushing/Proc.Equipment	2018	51	120	Crushing/Proc.Equipment_2018_120	2,881	0,58	3,763	3,881	0,006	0,284	0,284	568,299	0,052	0,023310345
Crushing/Proc.Equipment	2018	121	175	Crushing/Proc.Equipment_2018_175	4,267	0,427	3,234	3,049	0,006	0,161	0,161	568,299	0,038	0,017034483
Crushing/Proc.Equipment	2018	176	250	Crushing/Proc.Equipment_2018_250	4,701	0,322	1,146	2,622	0,006	0,083	0,083	568,299	0,029	0,013
Crushing/Proc.Equipment	2018	251	500	Crushing/Proc.Equipment_2018_500	6,912	0,309	1,099	2,312	0,005	0,079	0,079	568,299	0,027	0,012103448
Crushing/Proc.Equipment	2018	501	750	Crushing/Proc.Equipment_2018_750	10,84	0,308	1,097	2,358	0,005	0,079	0,079	568,299	0,027	0,012103448
Crushing/Proc.Equipment	2018	1001	9999	Crushing/Proc.Equipment_2018_9999	28,23	0,361	1,198	4,168	0,005	0,107	0,107	568,299	0,032	0,014344828
Crushing/Proc.Equipment	2019	26	50	Crushing/Proc.Equipment_2019_50	2,798	1,064	5,316	4,495	0,007	0,269	0,269	568,299	0,096	0,043034483
Crushing/Proc.Equipment	2019	51	120	Crushing/Proc.Equipment_2019_120	2,577	0,519	3,739	3,544	0,006	0,241	0,241	568,299	0,046	0,02062069
Crushing/Proc.Equipment	2019	121	175	Crushing/Proc.Equipment_2019_175	3,938	0,394	3,233	2,7	0,006	0,141	0,141	568,299	0,035	0,015689655
Crushing/Proc.Equipment	2019	176	250	Crushing/Proc.Equipment_2019_250	4,451	0,304	1,134	2,3	0,006	0,074	0,074	568,299	0,027	0,012103448
Crushing/Proc.Equipment	2019	251	500	Crushing/Proc.Equipment_2019_500	6,592	0,295	1,087	2,046	0,005	0,071	0,071	568,299	0,026	0,011655172
Crushing/Proc.Equipment	2019	501	750	Crushing/Proc.Equipment_2019_750	10,352	0,294	1,085	2,085	0,005	0,071	0,071	568,299	0,026	0,011655172
Crushing/Proc.Equipment	2019	1001	9999	Crushing/Proc.Equipment_2019_9999	26,978	0,345	1,173	3,927	0,005	0,098	0,098	568,299	0,031	0,013896552
Crushing/Proc.Equipment	2020	26	50	Crushing/Proc.Equipment_2020_50	2,489	0,947	5,211	4,347	0,007	0,233	0,233	568,299	0,085	0,038103448
Crushing/Proc.Equipment	2020	51	120	Crushing/Proc.Equipment_2020_120	2,348	0,473	3,722	3,249	0,006	0,206	0,206	568,299	0,042	0,018827586
Crushing/Proc.Equipment	2020	121	175	Crushing/Proc.Equipment_2020_175	3,673	0,367	3,234	2,392	0,006	0,124	0,124	568,299	0,033	0,014793103
Crushing/Proc.Equipment	2020	176	250	Crushing/Proc.Equipment_2020_250	4,222	0,289	1,125	2,014	0,006	0,065	0,065	568,299	0,026	0,011655172
Crushing/Proc.Equipment	2020	251	500	Crushing/Proc.Equipment_2020_500	6,283	0,281	1,078	1,799	0,005	0,063	0,063	568,299	0,025	0,011206897
Crushing/Proc.Equipment	2020	501	750	Crushing/Proc.Equipment_2020_750	9,884	0,281	1,077	1,835	0,005	0,063	0,063	568,299	0,025	0,011206897
Crushing/Proc.Equipment	2020	1001	9999	Crushing/Proc.Equipment_2020_9999	25,755	0,329	1,153	3,699	0,005	0,089	0,089	568,299	0,029	0,013
Crushing/Proc.Equipment	2021	26	50	Crushing/Proc.Equipment_2021_50	2,265	0,862	5,136	4,211	0,007	0,201	0,201	568,299	0,077	0,034517241
Crushing/Proc.Equipment	2021	51	120	Crushing/Proc.Equipment_2021_120	2,176	0,438	3,711	2,989	0,006	0,178	0,178	568,299	0,039	0,017482759

Crushing/Proc.Equipment	2021	121	175	Crushing/Proc.Equipment_2021_175	3,442	0,344	3,235	2,114	0,006	0,109	0,109	568,299	0,031	0,013896552
Crushing/Proc.Equipment	2021	176	250	Crushing/Proc.Equipment_2021_250	4,009	0,274	1,119	1,756	0,006	0,057	0,057	568,299	0,024	0,010758621
Crushing/Proc.Equipment	2021	251	500	Crushing/Proc.Equipment_2021_500	5,988	0,268	1,072	1,574	0,005	0,055	0,055	568,3	0,024	0,010758621
Crushing/Proc.Equipment	2021	501	750	Crushing/Proc.Equipment_2021_750	9,434	0,268	1,072	1,606	0,005	0,055	0,055	568,299	0,024	0,010758621
Crushing/Proc.Equipment	2021	1001	9999	Crushing/Proc.Equipment_2021_9999	24,586	0,314	1,136	3,487	0,005	0,08	0,08	568,299	0,028	0,012551724
Crushing/Proc.Equipment	2022	26	50	Crushing/Proc.Equipment_2022_50	2,09	0,795	5,081	4,083	0,007	0,172	0,172	568,299	0,071	0,031827586
Crushing/Proc.Equipment	2022	51	120	Crushing/Proc.Equipment_2022_120	2,036	0,41	3,704	2,758	0,006	0,154	0,154	568,299	0,037	0,016586207
Crushing/Proc.Equipment	2022	121	175	Crushing/Proc.Equipment_2022_175	3,231	0,323	3,237	1,861	0,006	0,095	0,095	568,299	0,029	0,013
Crushing/Proc.Equipment	2022	176	250	Crushing/Proc.Equipment_2022_250	3,808	0,26	1,114	1,521	0,006	0,05	0,05	568,299	0,023	0,010310345
Crushing/Proc.Equipment	2022	251	500	Crushing/Proc.Equipment_2022_500	5,706	0,255	1,067	1,389	0,005	0,048	0,048	568,299	0,023	0,010310345
Crushing/Proc.Equipment	2022	501	750	Crushing/Proc.Equipment_2022_750	9,002	0,256	1,067	1,416	0,005	0,048	0,048	568,299	0,023	0,010310345
Crushing/Proc.Equipment	2022	1001	9999	Crushing/Proc.Equipment_2022_9999	23,492	0,3	1,121	3,31	0,005	0,073	0,073	568,299	0,027	0,012103448
Crushing/Proc.Equipment	2023	26	50	Crushing/Proc.Equipment_2023_50	1,944	0,739	5,039	3,962	0,007	0,146	0,146	568,299	0,066	0,029586207
Crushing/Proc.Equipment	2023	51	120	Crushing/Proc.Equipment_2023_120	1,914	0,385	3,7	2,552	0,006	0,132	0,132	568,299	0,034	0,015241379
Crushing/Proc.Equipment	2023	121	175	Crushing/Proc.Equipment_2023_175	3,042	0,304	3,24	1,654	0,006	0,083	0,083	568,299	0,027	0,012103448
Crushing/Proc.Equipment	2023	176	250	Crushing/Proc.Equipment_2023_250	3,623	0,248	1,111	1,33	0,006	0,043	0,043	568,299	0,022	0,009862069
Crushing/Proc.Equipment	2023	251	500	Crushing/Proc.Equipment_2023_500	5,444	0,244	1,064	1,227	0,005	0,042	0,042	568,299	0,022	0,009862069
Crushing/Proc.Equipment	2023	501	750	Crushing/Proc.Equipment_2023_750	8,598	0,244	1,065	1,251	0,005	0,042	0,042	568,3	0,022	0,009862069
Crushing/Proc.Equipment	2023	1001	9999	Crushing/Proc.Equipment_2023_9999	22,463	0,287	1,107	3,16	0,005	0,066	0,066	568,299	0,025	0,011206897
Crushing/Proc.Equipment	2024	26	50	Crushing/Proc.Equipment_2024_50	1,825	0,694	5,008	3,85	0,007	0,125	0,125	568,299	0,062	0,027793103
Crushing/Proc.Equipment	2024	51	120	Crushing/Proc.Equipment_2024_120	1,81	0,364	3,697	2,389	0,006	0,112	0,112	568,299	0,032	0,014344828
Crushing/Proc.Equipment	2024	121	175	Crushing/Proc.Equipment_2024_175	2,866	0,287	3,243	1,472	0,006	0,071	0,071	568,299	0,025	0,011206897
Crushing/Proc.Equipment	2024	176	250	Crushing/Proc.Equipment_2024_250	3,448	0,236	1,109	1,165	0,006	0,036	0,036	568,299	0,021	0,009413793
Crushing/Proc.Equipment	2024	251	500	Crushing/Proc.Equipment_2024_500	5,193	0,232	1,062	1,077	0,005	0,035	0,035	568,299	0,021	0,009413793
Crushing/Proc.Equipment	2024	501	750	Crushing/Proc.Equipment_2024_750	8,207	0,233	1,063	1,098	0,005	0,036	0,036	568,299	0,021	0,009413793
Crushing/Proc.Equipment	2024	1001	9999	Crushing/Proc.Equipment_2024_9999	21,454	0,274	1,096	3,029	0,005	0,059	0,059	568,299	0,024	0,010758621
Crushing/Proc.Equipment	2025	26	50	Crushing/Proc.Equipment_2025_50	1,724	0,656	4,982	3,742	0,007	0,107	0,107	568,299	0,059	0,026448276
Crushing/Proc.Equipment	2025	51	120	Crushing/Proc.Equipment_2025_120	1,716	0,345	3,694	2,248	0,006	0,095	0,095	568,299	0,031	0,013896552
Crushing/Proc.Equipment	2025	121	175	Crushing/Proc.Equipment_2025_175	2,696	0,27	3,246	1,301	0,006	0,06	0,06	568,299	0,024	0,010758621
Crushing/Proc.Equipment	2025	176	250	Crushing/Proc.Equipment_2025_250	3,279	0,224	1,108	1,012	0,006	0,031	0,031	568,299	0,02	0,008965517
Crushing/Proc.Equipment	2025	251	500	Crushing/Proc.Equipment_2025_500	4,95	0,221	1,061	0,937	0,005	0,03	0,03	568,299	0,02	0,008965517
Crushing/Proc.Equipment	2025	501	750	Crushing/Proc.Equipment_2025_750	7,826	0,222	1,061	0,955	0,005	0,03	0,03	568,299	0,02	0,008965517
Crushing/Proc.Equipment	2025	1001	9999	Crushing/Proc.Equipment_2025_9999	20,429	0,261	1,087	2,91	0,005	0,053	0,053	568,299	0,023	0,010310345
Crushing/Proc.Equipment	2030	26	50	Crushing/Proc.Equipment_2030_50	1,381	0,525	4,857	3,351	0,007	0,043	0,043	568,299	0,047	0,021068966
Crushing/Proc.Equipment	2030	51	120	Crushing/Proc.Equipment_2030_120	1,35	0,272	3,673	1,708	0,006	0,038	0,038	568,299	0,024	0,010758621
Crushing/Proc.Equipment	2030	121	175	Crushing/Proc.Equipment_2030_175	1,976	0,197	3,244	0,6	0,006	0,025	0,025	568,299	0,017	0,00762069
Crushing/Proc.Equipment	2030	176	250	Crushing/Proc.Equipment_2030_250	2,701	0,185	1,105	0,502	0,006	0,017	0,017	568,299	0,016	0,007172414
Crushing/Proc.Equipment	2030	251	500	Crushing/Proc.Equipment_2030_500	4,113	0,184	1,058	0,476	0,005	0,017	0,017	568,299	0,016	0,007172414
Crushing/Proc.Equipment	2030	501	750	Crushing/Proc.Equipment_2030_750	6,473	0,184	1,058	0,478	0,005	0,017	0,017	568,299	0,016	0,007172414
Crushing/Proc.Equipment	2030	1001	9999	Crushing/Proc.Equipment_2030_9999	15,345	0,196	1,059	2,59	0,005	0,032	0,032	568,299	0,017	0,00762069
Crushing/Proc.Equipment	2035	26	50	Crushing/Proc.Equipment_2035_50	1,282	0,487	4,819	3,237	0,007	0,023	0,023	568,299	0,044	0,019724138
Crushing/Proc.Equipment	2035	51	120	Crushing/Proc.Equipment_2035_120	1,236	0,249	3,665	1,531	0,006	0,02	0,02	568,299	0,022	0,009862069
Crushing/Proc.Equipment	2035	121	175	Crushing/Proc.Equipment_2035_175	1,76	0,176	3,242	0,382	0,006	0,015	0,015	568,299	0,015	0,006724138
Crushing/Proc.Equipment	2035	176	250	Crushing/Proc.Equipment_2035_250	2,521	0,172	1,104	0,342	0,006	0,012	0,012	568,3	0,015	0,006724138
Crushing/Proc.Equipment	2035	251	500	Crushing/Proc.Equipment_2035_500	3,852	0,172	1,058	0,338	0,005	0,012	0,012	568,299	0,015	0,006724138
Crushing/Proc.Equipment	2035	501	750	Crushing/Proc.Equipment_2035_750	6,064	0,172	1,058	0,338	0,005	0,012	0,012	568,299	0,015	0,006724138
Crushing/Proc.Equipment	2035	1001	9999	Crushing/Proc.Equipment_2035_9999	13,865	0,177	1,058	2,482	0,005	0,026	0,026	568,299	0,016	0,007172414
Crushing/Proc.Equipment	2040	26	50	Crushing/Proc.Equipment_2040_50	1,284	0,488	4,833	3,194	0,007	0,017	0,017	568,299	0,044	0,019724138
Crushing/Proc.Equipment	2040	51	120	Crushing/Proc.Equipment_2040_120	1,219	0,245	3,67	1,477	0,006	0,015	0,015	568,299	0,022	0,009862069
Crushing/Proc.Equipment	2040	121	175	Crushing/Proc.Equipment_2040_175	1,698	0,17	3,246	0,306	0,006	0,012	0,012	568,299	0,015	0,006724138
Crushing/Proc.Equipment	2040	176	250	Crushing/Proc.Equipment_2040_250	2,464	0,168	1,106	0,292	0,006	0,011	0,011	568,299	0,015	0,006724138
Crushing/Proc.Equipment	2040	251	500	Crushing/Proc.Equipment_2040_500	3,766	0,168	1,059	0,292	0,005	0,011	0,011	568,299	0,015	0,006724138
Crushing/Proc.Equipment	2040	501	750	Crushing/Proc.Equipment_2040_750	5,941	0,169	1,059	0,292	0,005	0,011	0,011	568,299	0,015	0,006724138
Crushing/Proc.Equipment	2040	1001	9999	Crushing/Proc.Equipment_2040_9999	13,333	0,17	1,059	2,457	0,005	0,024	0,024	568,299	0,015	0,006724138
Dumpers/Tenders	1990	16	25	Dumpers/Tenders_1990_25	2,645	2,213	4,999	6,919	0,855	0,741	0,741	568,299	0,199	0,089206897
Dumpers/Tenders	2000	16	25	Dumpers/Tenders_2000_25	2,444	2,045	4,69	6,397	0,065	0,571	0,571	568,299	0,184	0,082482759
Dumpers/Tenders	2005	16	25	Dumpers/Tenders_2005_25	1,554	1,3	3,337	5,74	0,065	0,426	0,426	568,299	0,117	0,052448276
Dumpers/Tenders	2010	16	25	Dumpers/Tenders_2010_25	0,963	0,806	2,507	4,804	0,007	0,271	0,271	568,299	0,072	0,032275862
Dumpers/Tenders	2011	16	25	Dumpers/Tenders_2011_25	0,921	0,771	2,456	4,686	0,007	0,251	0,251	568,299	0,069	0,030931034
Dumpers/Tenders	2012	16	25	Dumpers/Tenders_2012_25	0,887	0,742	2,416	4,576	0,007	0,232	0,232	568,299	0,066	0,029586207
Dumpers/Tenders	2013	16	25	Dumpers/Tenders_2013_25	0,86	0,719	2,385	4,477	0,007	0,216	0,216	568,3	0,064	0,028689655
Dumpers/Tenders	2014	16	25	Dumpers/Tenders_2014_25	0,842	0,705	2,364	4,433	0,007	0,2	0,2	568,3	0,063	0,028241379
Dumpers/Tenders	2015	16	25	Dumpers/Tenders_2015_25	0,831	0,696	2,35	4,402	0,007	0,187	0,187	568,299	0,062	0,027793103
Dumpers/Tenders	2016	16	25	Dumpers/Tenders_2016_25	0,825	0,69	2,342	4,378	0,007	0,175	0,175	568,299	0,062	0,027793103
Dumpers/Tenders	2017	16	25	Dumpers/Tenders_2017_25	0,821	0,687	2,34	4,362	0,007	0,171	0,171	568,299	0,062	0,027793103
Dumpers/Tenders	2018	16	25	Dumpers/Tenders_2018_25	0,82	0,686	2,339	4,35	0,007	0,169	0,169	568,299	0,061	0,027344828
Dumpers/Tenders	2019	16	25	Dumpers/Tenders_2019_25	0,82	0,686	2,339	4,341	0,007	0,167	0,167	568,299	0,061	0,027344828
Dumpers/Tenders	2020	16	25	Dumpers/Tenders_2020_25	0,819	0,685	2,339	4,336	0,007	0,165	0,165	568,299	0,061	0,027344828
Dumpers/Tenders	2021	16	25	Dumpers/Tenders_2021_25	0,819	0,685	2,339	4,333	0,007	0,163	0,163	568,299	0,061	0,027344828
Dumpers/Tenders	2022	16	25	Dumpers/Tenders_2022_25	0,819	0,685	2,339	4,332	0,007	0,162	0,162	568,299	0,061	0,027344828
Dumpers/Tenders	2023	16	25	Dumpers/Tenders_2023_25	0,819	0,685	2,339	4,332	0,007	0,162	0,162	568,299	0,061	0,027344828
Dumpers/Tenders	2024	16	25	Dumpers/Tenders_2024_25	0,819	0,685	2,34	4,332	0,007	0,161	0,161	568,299	0,061	0,027344828
Dumpers/Tenders	2025	16	25	Dumpers/Tenders_2025_25	0,819	0,685	2,339	4,332	0,007	0,161	0,161	568,299	0,061	0,027344828

Dumpers/Tenders	2030	16	25	Dumpers/Tenders_2030_25	0,819	0,685	2,34	4,332	0,007	0,161	0,161	568,299	0,061	0,027344828
Dumpers/Tenders	2035	16	25	Dumpers/Tenders_2035_25	0,819	0,685	2,339	4,332	0,007	0,161	0,161	568,299	0,061	0,027344828
Dumpers/Tenders	2040	16	25	Dumpers/Tenders_2040_25	0,819	0,685	2,339	4,332	0,007	0,161	0,161	568,299	0,061	0,027344828
Excavators	1990	16	25	Excavators_1990_25	5,933	2,213	4,999	6,919	0,855	0,741	0,741	568,299	0,199	0,089206897
Excavators	1990	26	50	Excavators_1990_50	21,032	5,155	10,359	8,08	0,871	1,341	1,341	568,299	0,465	0,208448276
Excavators	1990	51	120	Excavators_1990_120	29,647	2,469	5,901	15,421	0,791	1,413	1,413	568,299	0,222	0,099517241
Excavators	1990	121	175	Excavators_1990_175	35,634	1,947	5,271	15,075	0,758	1,096	1,096	568,299	0,175	0,078448276
Excavators	1990	176	250	Excavators_1990_250	50,388	1,947	5,271	15,075	0,758	1,096	1,096	568,299	0,175	0,078448276
Excavators	1990	251	500	Excavators_1990_500	65,206	1,71	12,155	14,225	0,662	0,93	0,93	568,3	0,154	0,069034483
Excavators	1990	501	750	Excavators_1990_750	108,079	1,71	12,155	14,225	1,018	0,947	0,947	568,299	0,154	0,069034483
Excavators	2000	16	25	Excavators_2000_25	4,937	1,841	4,315	6,281	0,065	0,543	0,543	568,299	0,166	0,074413793
Excavators	2000	26	50	Excavators_2000_50	18,836	4,616	9,494	7,102	0,066	0,958	0,958	568,299	0,416	0,186482759
Excavators	2000	51	120	Excavators_2000_120	21,925	1,826	4,602	10,156	0,06	0,913	0,913	568,299	0,164	0,073517241
Excavators	2000	121	175	Excavators_2000_175	22,624	1,236	3,672	9,345	0,057	0,525	0,525	568,299	0,111	0,049758621
Excavators	2000	176	250	Excavators_2000_250	25,927	1,001	2,794	8,952	0,057	0,409	0,409	568,299	0,09	0,040344828
Excavators	2000	251	500	Excavators_2000_500	34,719	0,91	3,974	8,491	0,05	0,362	0,362	568,299	0,082	0,036758621
Excavators	2000	501	750	Excavators_2000_750	57,546	0,91	3,974	8,491	0,052	0,362	0,362	568,299	0,082	0,036758621
Excavators	2005	16	25	Excavators_2005_25	2,091	0,779	2,397	5,219	0,065	0,319	0,319	568,299	0,07	0,03137931
Excavators	2005	26	50	Excavators_2005_50	16,217	3,974	8,597	6,562	0,066	0,871	0,871	568,299	0,358	0,160482759
Excavators	2005	51	120	Excavators_2005_120	19,001	1,582	4,354	8,632	0,06	0,853	0,853	568,299	0,142	0,063655172
Excavators	2005	121	175	Excavators_2005_175	18,9	1,032	3,452	7,905	0,057	0,461	0,461	568,299	0,093	0,041689655
Excavators	2005	176	250	Excavators_2005_250	18,379	0,71	1,892	7,456	0,057	0,276	0,276	568,299	0,064	0,028689655
Excavators	2005	251	500	Excavators_2005_500	24,005	0,629	2,194	6,685	0,05	0,248	0,248	568,299	0,056	0,025103448
Excavators	2005	501	750	Excavators_2005_750	40,443	0,64	2,192	6,888	0,052	0,251	0,251	568,299	0,057	0,025551724
Excavators	2010	16	25	Excavators_2010_25	0,993664	0,835	4,56926	5,19123	0,005	0,413	0,38	584,0737	0,17	0,076206897
Excavators	2010	26	50	Excavators_2010_50	0,993664	0,835	4,56926	5,19123	0,005	0,413	0,38	584,0737	0,17	0,076206897
Excavators	2010	51	120	Excavators_2010_120	0,73275	0,616	3,69337	6,10169	0,005	0,469	0,432	518,9941	0,151	0,067689655
Excavators	2010	121	175	Excavators_2010_175	0,572846	0,481	3,1674	5,82964	0,005	0,299	0,275	525,0484	0,153	0,068586207
Excavators	2010	176	250	Excavators_2010_250	0,422004	0,355	1,45526	5,78636	0,005	0,182	0,167	525,2427	0,153	0,068586207
Excavators	2010	251	500	Excavators_2010_500	0,315965	0,265	1,44794	4,38582	0,005	0,143	0,132	522,2909	0,152	0,068137931
Excavators	2010	501	750	Excavators_2010_750	0,327987	0,276	1,53784	4,52996	0,005	0,149	0,137	520,4269	0,151	0,067689655
Excavators	2011	16	25	Excavators_2011_25	0,999474	0,84	4,67202	5,21824	0,005	0,413	0,38	582,8586	0,17	0,076206897
Excavators	2011	26	50	Excavators_2011_50	0,999474	0,84	4,67202	5,21824	0,005	0,413	0,38	582,8586	0,17	0,076206897
Excavators	2011	51	120	Excavators_2011_120	0,675188	0,567	3,65807	5,70006	0,005	0,436	0,401	517,4139	0,151	0,067689655
Excavators	2011	121	175	Excavators_2011_175	0,533269	0,448	3,15702	5,44943	0,005	0,278	0,255	523,5178	0,153	0,068586207
Excavators	2011	176	250	Excavators_2011_250	0,400356	0,336	1,41809	5,41822	0,005	0,171	0,157	523,6886	0,153	0,068586207
Excavators	2011	251	500	Excavators_2011_500	0,303301	0,255	1,41288	4,1131	0,005	0,133	0,123	521,2972	0,152	0,068137931
Excavators	2011	501	750	Excavators_2011_750	0,326107	0,274	1,47034	4,42127	0,005	0,146	0,134	519,1221	0,151	0,067689655
Excavators	2012	16	25	Excavators_2012_25	1,018057	0,855	4,79179	5,19511	0,005	0,412	0,379	581,4648	0,17	0,076206897
Excavators	2012	26	50	Excavators_2012_50	1,018057	0,855	4,79179	5,19511	0,005	0,412	0,379	581,4648	0,17	0,076206897
Excavators	2012	51	120	Excavators_2012_120	0,67458	0,567	3,68099	5,63138	0,005	0,434	0,399	516,083	0,151	0,067689655
Excavators	2012	121	175	Excavators_2012_175	0,534632	0,449	3,17839	5,38897	0,005	0,275	0,253	522,0959	0,153	0,068586207
Excavators	2012	176	250	Excavators_2012_250	0,402641	0,338	1,42562	5,32577	0,005	0,169	0,155	522,4958	0,153	0,068586207
Excavators	2012	251	500	Excavators_2012_500	0,308496	0,259	1,4255	4,05714	0,005	0,131	0,121	520,034	0,152	0,068137931
Excavators	2012	501	750	Excavators_2012_750	0,334165	0,281	1,47962	4,3898	0,005	0,145	0,134	517,8167	0,151	0,067689655
Excavators	2013	16	25	Excavators_2013_25	0,995402	0,836	4,80774	5,0526	0,005	0,393	0,362	578,236	0,17	0,076206897
Excavators	2013	26	50	Excavators_2013_50	0,995402	0,836	4,80774	5,0526	0,005	0,393	0,362	578,236	0,17	0,076206897
Excavators	2013	51	120	Excavators_2013_120	0,639011	0,537	3,66866	5,3703	0,005	0,404	0,372	513,7321	0,151	0,067689655
Excavators	2013	121	175	Excavators_2013_175	0,503929	0,423	3,16966	5,08991	0,005	0,253	0,233	519,496	0,153	0,068586207
Excavators	2013	176	250	Excavators_2013_250	0,383779	0,322	1,40068	4,93756	0,005	0,157	0,145	519,8753	0,153	0,068586207
Excavators	2013	251	500	Excavators_2013_500	0,295491	0,248	1,38754	3,73509	0,005	0,121	0,111	517,7809	0,152	0,068137931
Excavators	2013	501	750	Excavators_2013_750	0,301827	0,254	1,36166	3,92892	0,005	0,126	0,116	514,1872	0,151	0,067689655
Excavators	2014	16	25	Excavators_2014_25	0,981904	0,825	4,84434	4,96504	0,005	0,38	0,35	575,2674	0,17	0,076206897
Excavators	2014	26	50	Excavators_2014_50	0,981904	0,825	4,84434	4,96504	0,005	0,38	0,35	575,2674	0,17	0,076206897
Excavators	2014	51	120	Excavators_2014_120	0,610505	0,513	3,66313	5,13137	0,005	0,382	0,352	511,3057	0,151	0,067689655
Excavators	2014	121	175	Excavators_2014_175	0,464169	0,39	3,15438	4,65701	0,005	0,229	0,211	516,9066	0,153	0,068586207
Excavators	2014	176	250	Excavators_2014_250	0,350137	0,294	1,34557	4,37384	0,005	0,139	0,128	517,3234	0,153	0,068586207
Excavators	2014	251	500	Excavators_2014_500	0,276896	0,233	1,32721	3,35284	0,005	0,108	0,099	515,2151	0,152	0,068137931
Excavators	2014	501	750	Excavators_2014_750	0,284069	0,239	1,34745	3,54089	0,005	0,114	0,105	511,9453	0,151	0,067689655
Excavators	2015	16	25	Excavators_2015_25	0,991068	0,833	4,92488	4,91817	0,005	0,375	0,345	569,5116	0,17	0,076206897
Excavators	2015	26	50	Excavators_2015_50	0,991068	0,833	4,92488	4,91817	0,005	0,375	0,345	569,5116	0,17	0,076206897
Excavators	2015	51	120	Excavators_2015_120	0,60346	0,507	3,67943	5,01907	0,005	0,373	0,344	506,1727	0,151	0,067689655
Excavators	2015	121	175	Excavators_2015_175	0,456597	0,384	3,16762	4,4807	0,005	0,221	0,203	511,6869	0,153	0,068586207
Excavators	2015	176	250	Excavators_2015_250	0,343545	0,289	1,33148	4,18222	0,005	0,133	0,122	512,0555	0,153	0,068586207
Excavators	2015	251	500	Excavators_2015_500	0,276143	0,232	1,31662	3,21395	0,005	0,104	0,096	509,8675	0,152	0,068137931
Excavators	2015	501	750	Excavators_2015_750	0,28808	0,242	1,35372	3,47287	0,005	0,113	0,104	506,6816	0,151	0,067689655
Excavators	2016	16	25	Excavators_2016_25	0,970016	0,815	4,94198	4,82432	0,005	0,359	0,33	563,8026	0,17	0,076206897
Excavators	2016	26	50	Excavators_2016_50	0,970016	0,815	4,94198	4,82432	0,005	0,359	0,33	563,8026	0,17	0,076206897
Excavators	2016	51	120	Excavators_2016_120	0,566011	0,476	3,66066	4,70806	0,005	0,344	0,317	500,9659	0,151	0,067689655
Excavators	2016	121	175	Excavators_2016_175	0,425494	0,358	3,15771	4,08095	0,005	0,201	0,185	506,495	0,153	0,068586207
Excavators	2016	176	250	Excavators_2016_250	0,312033	0,262	1,27749	3,66736	0,005	0,116	0,107	506,544	0,153	0,068586207
Excavators	2016	251	500	Excavators_2016_500	0,253752	0,213	1,23344	2,81451	0,005	0,091	0,083	504,2899	0,152	0,068137931
Excavators	2016	501	750	Excavators_2016_750	0,287698	0,242	1,34881	3,35762	0,005	0,11	0,101	501,6596	0,151	0,067689655

Excavators	2017	16	25	Excavators_2017_25	0,91741	0,771	4,88904	4,67818	0,005	0,332	0,305	554,9101	0,17	0,076206897
Excavators	2017	26	50	Excavators_2017_50	0,91741	0,771	4,88904	4,67818	0,005	0,332	0,305	554,9101	0,17	0,076206897
Excavators	2017	51	120	Excavators_2017_120	0,523542	0,44	3,63939	4,37952	0,005	0,31	0,285	493,409	0,151	0,067689655
Excavators	2017	121	175	Excavators_2017_175	0,397029	0,334	3,15091	3,69967	0,005	0,182	0,167	498,5222	0,153	0,068586207
Excavators	2017	176	250	Excavators_2017_250	0,293543	0,247	1,24911	3,31872	0,005	0,105	0,097	498,4364	0,153	0,068586207
Excavators	2017	251	500	Excavators_2017_500	0,237788	0,2	1,19852	2,50715	0,005	0,081	0,075	496,8098	0,152	0,068137931
Excavators	2017	501	750	Excavators_2017_750	0,249769	0,21	1,22803	2,71934	0,005	0,09	0,083	494,5496	0,152	0,068137931
Excavators	2018	16	25	Excavators_2018_25	0,818091	0,687	4,70022	4,39518	0,005	0,284	0,261	545,3468	0,17	0,076206897
Excavators	2018	26	50	Excavators_2018_50	0,818091	0,687	4,70022	4,39518	0,005	0,284	0,261	545,3468	0,17	0,076206897
Excavators	2018	51	120	Excavators_2018_120	0,438055	0,368	3,56214	3,76366	0,005	0,25	0,23	486,056	0,151	0,067689655
Excavators	2018	121	175	Excavators_2018_175	0,324959	0,273	3,09338	2,92361	0,005	0,142	0,13	490,6725	0,153	0,068586207
Excavators	2018	176	250	Excavators_2018_250	0,240329	0,202	1,15209	2,59377	0,005	0,079	0,073	490,2569	0,153	0,068586207
Excavators	2018	251	500	Excavators_2018_500	0,207823	0,175	1,13951	2,05045	0,005	0,066	0,061	489,1025	0,152	0,068137931
Excavators	2018	501	750	Excavators_2018_750	0,22476	0,189	1,22359	2,26567	0,005	0,076	0,07	487,6528	0,152	0,068137931
Excavators	2019	16	25	Excavators_2019_25	0,75855	0,637	4,59698	4,19867	0,005	0,25	0,23	536,9132	0,17	0,076206897
Excavators	2019	26	50	Excavators_2019_50	0,75855	0,637	4,59698	4,19867	0,005	0,25	0,23	536,9132	0,17	0,076206897
Excavators	2019	51	120	Excavators_2019_120	0,386598	0,325	3,52421	3,36874	0,005	0,211	0,194	478,2452	0,151	0,067689655
Excavators	2019	121	175	Excavators_2019_175	0,293021	0,246	3,08163	2,53264	0,005	0,122	0,112	482,6838	0,153	0,068586207
Excavators	2019	176	250	Excavators_2019_250	0,220917	0,186	1,12671	2,24187	0,005	0,068	0,063	482,2503	0,153	0,068586207
Excavators	2019	251	500	Excavators_2019_500	0,192898	0,162	1,1135	1,77986	0,005	0,058	0,053	481,2361	0,152	0,068137931
Excavators	2019	501	750	Excavators_2019_750	0,209677	0,176	1,17289	1,98661	0,005	0,067	0,062	479,2876	0,152	0,068137931
Excavators	2020	16	25	Excavators_2020_25	0,705964	0,593	4,50032	4,03131	0,005	0,222	0,204	525,3675	0,17	0,076206897
Excavators	2020	26	50	Excavators_2020_50	0,705964	0,593	4,50032	4,03131	0,005	0,222	0,204	525,3675	0,17	0,076206897
Excavators	2020	51	120	Excavators_2020_120	0,356064	0,299	3,50495	3,08964	0,005	0,185	0,17	468,0546	0,151	0,067689655
Excavators	2020	121	175	Excavators_2020_175	0,275327	0,231	3,08597	2,27838	0,005	0,11	0,102	472,2891	0,153	0,068586207
Excavators	2020	176	250	Excavators_2020_250	0,211076	0,177	1,11778	2,02738	0,005	0,061	0,056	471,8828	0,153	0,068586207
Excavators	2020	251	500	Excavators_2020_500	0,182542	0,153	1,1016	1,57199	0,005	0,052	0,048	470,2956	0,152	0,068137931
Excavators	2020	501	750	Excavators_2020_750	0,202011	0,17	1,14543	1,79718	0,005	0,061	0,056	468,8706	0,152	0,068137931
Excavators	2021	16	25	Excavators_2021_25	0,669315	0,562	4,46094	3,91866	0,005	0,202	0,186	525,3774	0,17	0,076206897
Excavators	2021	26	50	Excavators_2021_50	0,669315	0,562	4,46094	3,91866	0,005	0,202	0,186	525,3774	0,17	0,076206897
Excavators	2021	51	120	Excavators_2021_120	0,327314	0,275	3,49196	2,84891	0,005	0,161	0,148	467,7906	0,151	0,067689655
Excavators	2021	121	175	Excavators_2021_175	0,257574	0,216	3,08975	2,03357	0,005	0,099	0,091	472,3586	0,153	0,068586207
Excavators	2021	176	250	Excavators_2021_250	0,193738	0,163	1,10324	1,70572	0,005	0,052	0,048	471,7931	0,153	0,068586207
Excavators	2021	251	500	Excavators_2021_500	0,170127	0,143	1,08777	1,33174	0,005	0,045	0,041	469,6156	0,152	0,068137931
Excavators	2021	501	750	Excavators_2021_750	0,196683	0,165	1,14978	1,61856	0,005	0,056	0,052	469,547	0,152	0,068137931
Excavators	2022	16	25	Excavators_2022_25	0,568779	0,478	4,27341	3,70039	0,005	0,16	0,147	525,4468	0,17	0,076206897
Excavators	2022	26	50	Excavators_2022_50	0,568779	0,478	4,27341	3,70039	0,005	0,16	0,147	525,4468	0,17	0,076206897
Excavators	2022	51	120	Excavators_2022_120	0,299503	0,252	3,47329	2,60649	0,005	0,138	0,127	467,6256	0,151	0,067689655
Excavators	2022	121	175	Excavators_2022_175	0,22749	0,191	3,074	1,6781	0,005	0,081	0,075	472,1917	0,153	0,068586207
Excavators	2022	176	250	Excavators_2022_250	0,176606	0,148	1,09157	1,38616	0,005	0,044	0,04	472,0412	0,153	0,068586207
Excavators	2022	251	500	Excavators_2022_500	0,152263	0,128	1,06126	1,03988	0,005	0,035	0,032	469,7105	0,152	0,068137931
Excavators	2022	501	750	Excavators_2022_750	0,178436	0,15	1,144	1,2865	0,005	0,047	0,043	469,2892	0,152	0,068137931
Excavators	2023	16	25	Excavators_2023_25	0,535724	0,45	4,23393	3,59356	0,005	0,139	0,128	525,4286	0,17	0,076206897
Excavators	2023	26	50	Excavators_2023_50	0,535724	0,45	4,23393	3,59356	0,005	0,139	0,128	525,4286	0,17	0,076206897
Excavators	2023	51	120	Excavators_2023_120	0,273823	0,23	3,45367	2,38066	0,005	0,116	0,107	467,1573	0,151	0,067689655
Excavators	2023	121	175	Excavators_2023_175	0,212046	0,178	3,07648	1,46245	0,005	0,072	0,066	472,277	0,153	0,068586207
Excavators	2023	176	250	Excavators_2023_250	0,168964	0,142	1,08965	1,20943	0,005	0,039	0,036	472,2131	0,153	0,068586207
Excavators	2023	251	500	Excavators_2023_500	0,145171	0,122	1,05093	0,89311	0,005	0,03	0,028	469,8892	0,152	0,068137931
Excavators	2023	501	750	Excavators_2023_750	0,171247	0,144	1,13199	1,15865	0,005	0,043	0,04	468,6826	0,152	0,068137931
Excavators	2024	16	25	Excavators_2024_25	0,495634	0,416	4,20529	3,50816	0,005	0,12	0,11	525,979	0,17	0,076206897
Excavators	2024	26	50	Excavators_2024_50	0,495634	0,416	4,20529	3,50816	0,005	0,12	0,11	525,979	0,17	0,076206897
Excavators	2024	51	120	Excavators_2024_120	0,258544	0,217	3,45322	2,24781	0,005	0,102	0,094	467,3843	0,151	0,067689655
Excavators	2024	121	175	Excavators_2024_175	0,202572	0,17	3,08336	1,32479	0,005	0,065	0,06	472,4279	0,153	0,068586207
Excavators	2024	176	250	Excavators_2024_250	0,165297	0,139	1,0899	1,10808	0,005	0,036	0,033	472,4415	0,153	0,068586207
Excavators	2024	251	500	Excavators_2024_500	0,144133	0,121	1,05369	0,83129	0,005	0,029	0,026	469,7108	0,152	0,068137931
Excavators	2024	501	750	Excavators_2024_750	0,169017	0,142	1,13421	1,10467	0,005	0,041	0,037	468,652	0,152	0,068137931
Excavators	2025	16	25	Excavators_2025_25	0,47994	0,403	4,21941	3,45298	0,005	0,107	0,099	525,7772	0,17	0,076206897
Excavators	2025	26	50	Excavators_2025_50	0,47994	0,403	4,21941	3,45298	0,005	0,107	0,099	525,7772	0,17	0,076206897
Excavators	2025	51	120	Excavators_2025_120	0,23878	0,201	3,43876	2,08246	0,005	0,085	0,078	466,7376	0,151	0,067689655
Excavators	2025	121	175	Excavators_2025_175	0,187811	0,158	3,078	1,15367	0,005	0,057	0,052	472,4964	0,153	0,068586207
Excavators	2025	176	250	Excavators_2025_250	0,155588	0,131	1,08136	0,96211	0,005	0,032	0,029	472,5599	0,153	0,068586207
Excavators	2025	251	500	Excavators_2025_500	0,137039	0,115	1,05072	0,72641	0,005	0,026	0,024	470,2915	0,152	0,068137931
Excavators	2025	501	750	Excavators_2025_750	0,165305	0,139	1,13484	1,02571	0,005	0,038	0,035	468,5582	0,152	0,068137931
Excavators	2030	16	25	Excavators_2030_25	1,838	0,685	2,339	4,332	0,007	0,161	0,161	568,299	0,061	0,027344828
Excavators	2030	26	50	Excavators_2030_50	2,458	0,602	5,309	3,393	0,007	0,038	0,038	568,299	0,054	0,024206897
Excavators	2030	51	120	Excavators_2030_120	3,618	0,301	3,806	1,676	0,006	0,034	0,034	568,299	0,027	0,012103448
Excavators	2030	121	175	Excavators_2030_175	3,914	0,213	3,362	0,525	0,006	0,023	0,023	568,299	0,019	0,008517241
Excavators	2030	176	250	Excavators_2030_250	5,258	0,203	1,145	0,452	0,006	0,016	0,016	568,299	0,018	0,008068966
Excavators	2030	251	500	Excavators_2030_500	7,722	0,202	1,088	0,433	0,005	0,016	0,016	568,299	0,018	0,008068966
Excavators	2030	501	750	Excavators_2030_750	12,807	0,202	1,088	0,437	0,005	0,016	0,016	568,299	0,018	0,008068966
Excavators	2035	16	25	Excavators_2035_25	1,838	0,685	2,339	4,332	0,007	0,161	0,161	568,299	0,061	0,027344828
Excavators	2035	26	50	Excavators_2035_50	2,333	0,572	5,287	3,323	0,007	0,024	0,024	568,299	0,051	0,022862069
Excavators	2035	51	120	Excavators_2035_120	3,411	0,284	3,802	1,551	0,006	0,021	0,021	568,299	0,025	0,011206897

Excavators	2035	121	175	Excavators_2035_175	3,622	0,197	3,363	0,365	0,006	0,015	0,015	568,299	0,017	0,00762069
Excavators	2035	176	250	Excavators_2035_250	5,059	0,195	1,145	0,342	0,006	0,013	0,013	568,3	0,017	0,00762069
Excavators	2035	251	500	Excavators_2035_500	7,45	0,195	1,089	0,337	0,005	0,013	0,013	568,299	0,017	0,00762069
Excavators	2035	501	750	Excavators_2035_750	12,348	0,195	1,088	0,338	0,005	0,013	0,013	568,299	0,017	0,00762069
Excavators	2040	16	25	Excavators_2040_25	1,838	0,685	2,339	4,332	0,007	0,161	0,161	568,3	0,061	0,027344828
Excavators	2040	26	50	Excavators_2040_50	2,314	0,567	5,283	3,29	0,007	0,019	0,019	568,299	0,051	0,022862069
Excavators	2040	51	120	Excavators_2040_120	3,36	0,279	3,802	1,507	0,006	0,017	0,017	568,299	0,025	0,011206897
Excavators	2040	121	175	Excavators_2040_175	3,532	0,193	3,363	0,311	0,006	0,013	0,013	568,299	0,017	0,00762069
Excavators	2040	176	250	Excavators_2040_250	4,971	0,192	1,145	0,3	0,006	0,011	0,011	568,299	0,017	0,00762069
Excavators	2040	251	500	Excavators_2040_500	7,322	0,192	1,089	0,3	0,005	0,011	0,011	568,299	0,017	0,00762069
Excavators	2040	501	750	Excavators_2040_750	12,137	0,192	1,089	0,3	0,005	0,011	0,011	568,299	0,017	0,00762069
Forklifts	1990	26	50	Forklifts_1990_50	11,848	4,826	9,773	7,952	0,692	1,266	1,266	568,299	0,435	0,195
Forklifts	1990	51	120	Forklifts_1990_120	12,154	2,326	5,638	14,699	0,628	1,32	1,32	568,3	0,209	0,093689655
Forklifts	1990	121	175	Forklifts_1990_175	14,423	1,537	4,938	12,932	0,602	0,849	0,849	568,299	0,138	0,061862069
Forklifts	1990	176	250	Forklifts_1990_250	19,845	1,537	4,938	12,932	0,602	0,849	0,849	568,299	0,138	0,061862069
Forklifts	1990	251	500	Forklifts_1990_500	25,356	1,365	10,853	12,267	0,525	0,73	0,73	568,299	0,123	0,055137931
Forklifts	2000	26	50	Forklifts_2000_50	10,952	4,461	9,216	7,035	0,065	0,934	0,934	568,3	0,402	0,180206897
Forklifts	2000	51	120	Forklifts_2000_120	9,146	1,75	4,459	9,75	0,059	0,882	0,882	568,299	0,157	0,07037931
Forklifts	2000	121	175	Forklifts_2000_175	11,149	1,188	3,519	9,001	0,057	0,502	0,502	568,299	0,107	0,047965517
Forklifts	2000	176	250	Forklifts_2000_250	11,958	0,926	2,534	8,546	0,057	0,372	0,372	568,299	0,083	0,037206897
Forklifts	2000	251	500	Forklifts_2000_500	15,747	0,848	3,255	8,126	0,049	0,333	0,333	568,299	0,076	0,034068966
Forklifts	2005	26	50	Forklifts_2005_50	10,087	4,108	8,778	6,62	0,065	0,891	0,891	568,299	0,37	0,165862069
Forklifts	2005	51	120	Forklifts_2005_120	8,425	1,612	4,35	8,602	0,059	0,876	0,876	568,299	0,145	0,065
Forklifts	2005	121	175	Forklifts_2005_175	9,959	1,061	3,418	7,94	0,057	0,475	0,475	568,299	0,095	0,042586207
Forklifts	2005	176	250	Forklifts_2005_250	8,606	0,666	1,693	7,367	0,057	0,253	0,253	568,299	0,06	0,026896552
Forklifts	2005	251	500	Forklifts_2005_500	10,976	0,591	1,803	6,611	0,049	0,23	0,23	568,299	0,053	0,023758621
Forklifts	2010	26	50	Forklifts_2010_50	2,846117	2,392	7,62516	6,31187	0,005	0,729	0,671	583,8704	0,17	0,076206897
Forklifts	2010	51	120	Forklifts_2010_120	1,045472	0,878	4,10764	7,63494	0,005	0,625	0,575	523,9205	0,153	0,068586207
Forklifts	2010	121	175	Forklifts_2010_175	0,764801	0,643	3,54812	7,24303	0,005	0,389	0,357	524,5625	0,153	0,068586207
Forklifts	2010	176	250	Forklifts_2010_250	0,852639	0,716	2,88991	8,49545	0,005	0,398	0,366	525,9172	0,153	0,068586207
Forklifts	2010	251	500	Forklifts_2010_500	0,814667	0,685	5,79345	8,13812	0,005	0,381	0,351	526,239	0,153	0,068586207
Forklifts	2011	26	50	Forklifts_2011_50	2,771689	2,329	7,5619	6,26642	0,005	0,715	0,657	582,4107	0,17	0,076206897
Forklifts	2011	51	120	Forklifts_2011_120	1,023636	0,86	4,10232	7,45983	0,005	0,617	0,568	522,6107	0,153	0,068586207
Forklifts	2011	121	175	Forklifts_2011_175	0,759385	0,638	3,55732	7,14122	0,005	0,385	0,355	523,2511	0,153	0,068586207
Forklifts	2011	176	250	Forklifts_2011_250	0,819463	0,689	2,77115	8,17495	0,005	0,381	0,35	524,6024	0,153	0,068586207
Forklifts	2011	251	500	Forklifts_2011_500	0,787175	0,661	5,42187	7,84	0,005	0,368	0,338	524,9234	0,153	0,068586207
Forklifts	2012	26	50	Forklifts_2012_50	2,800937	2,354	7,68036	6,27736	0,005	0,72	0,663	580,951	0,17	0,076206897
Forklifts	2012	51	120	Forklifts_2012_120	1,026513	0,863	4,13104	7,43066	0,005	0,62	0,571	521,3009	0,153	0,068586207
Forklifts	2012	121	175	Forklifts_2012_175	0,764904	0,643	3,58413	7,11981	0,005	0,387	0,356	521,9397	0,153	0,068586207
Forklifts	2012	176	250	Forklifts_2012_250	0,82428	0,693	2,77846	8,14199	0,005	0,381	0,35	523,2876	0,153	0,068586207
Forklifts	2012	251	500	Forklifts_2012_500	0,795085	0,668	5,42806	7,85628	0,005	0,369	0,34	523,6078	0,153	0,068586207
Forklifts	2013	26	50	Forklifts_2013_50	2,655997	2,232	7,4937	6,14743	0,005	0,689	0,634	578,0317	0,17	0,076206897
Forklifts	2013	51	120	Forklifts_2013_120	0,996839	0,838	4,11855	7,21545	0,005	0,603	0,555	518,6813	0,153	0,068586207
Forklifts	2013	121	175	Forklifts_2013_175	0,743778	0,625	3,57971	6,90229	0,005	0,375	0,345	519,3169	0,153	0,068586207
Forklifts	2013	176	250	Forklifts_2013_250	0,786493	0,661	2,67477	7,77338	0,005	0,36	0,332	520,658	0,153	0,068586207
Forklifts	2013	251	500	Forklifts_2013_500	0,686735	0,577	4,6871	6,91072	0,005	0,314	0,289	520,9766	0,153	0,068586207
Forklifts	2014	26	50	Forklifts_2014_50	2,515249	2,114	7,32058	6,00609	0,005	0,656	0,604	575,1123	0,17	0,076206897
Forklifts	2014	51	120	Forklifts_2014_120	0,945485	0,794	4,07936	6,84833	0,005	0,574	0,528	516,0617	0,153	0,068586207
Forklifts	2014	121	175	Forklifts_2014_175	0,688099	0,578	3,52073	6,35205	0,005	0,345	0,317	516,694	0,153	0,068586207
Forklifts	2014	176	250	Forklifts_2014_250	0,731475	0,615	2,50114	7,27612	0,005	0,33	0,304	518,0284	0,153	0,068586207
Forklifts	2014	251	500	Forklifts_2014_500	0,644228	0,541	4,25186	6,35258	0,005	0,289	0,266	518,3454	0,153	0,068586207
Forklifts	2015	26	50	Forklifts_2015_50	2,466892	2,073	7,29982	5,93143	0,005	0,643	0,591	569,2736	0,17	0,076206897
Forklifts	2015	51	120	Forklifts_2015_120	0,914509	0,768	4,06346	6,60091	0,005	0,555	0,51	510,8225	0,153	0,068586207
Forklifts	2015	121	175	Forklifts_2015_175	0,673169	0,566	3,51969	6,13482	0,005	0,335	0,308	511,4484	0,153	0,068586207
Forklifts	2015	176	250	Forklifts_2015_250	0,672054	0,565	2,32501	6,69668	0,005	0,298	0,274	512,7693	0,153	0,068586207
Forklifts	2015	251	500	Forklifts_2015_500	0,539875	0,454	3,29951	5,33227	0,005	0,237	0,218	513,083	0,153	0,068586207
Forklifts	2016	26	50	Forklifts_2016_50	2,217878	1,864	6,93473	5,66211	0,005	0,583	0,537	563,4349	0,17	0,076206897
Forklifts	2016	51	120	Forklifts_2016_120	0,860278	0,723	4,02311	6,22192	0,005	0,52	0,479	505,5833	0,153	0,068586207
Forklifts	2016	121	175	Forklifts_2016_175	0,630613	0,53	3,47253	5,67466	0,005	0,31	0,285	506,2028	0,153	0,068586207
Forklifts	2016	176	250	Forklifts_2016_250	0,641979	0,539	2,22626	6,35303	0,005	0,28	0,257	507,5101	0,153	0,068586207
Forklifts	2016	251	500	Forklifts_2016_500	0,419581	0,353	2,57209	4,04212	0,005	0,174	0,16	507,8206	0,153	0,068586207
Forklifts	2017	26	50	Forklifts_2017_50	2,026819	1,703	6,67251	5,45035	0,005	0,536	0,493	554,6769	0,17	0,076206897
Forklifts	2017	51	120	Forklifts_2017_120	0,799635	0,672	3,97881	5,81772	0,005	0,48	0,442	497,7245	0,153	0,068586207
Forklifts	2017	121	175	Forklifts_2017_175	0,604568	0,508	3,45188	5,36215	0,005	0,294	0,27	498,3344	0,153	0,068586207
Forklifts	2017	176	250	Forklifts_2017_250	0,589964	0,496	2,0923	5,75116	0,005	0,252	0,232	499,6213	0,153	0,068586207
Forklifts	2017	251	500	Forklifts_2017_500	0,401897	0,338	2,50803	3,7797	0,005	0,161	0,148	499,927	0,153	0,068586207
Forklifts	2018	26	50	Forklifts_2018_50	1,658295	1,393	6,10276	5,05181	0,005	0,447	0,411	545,9188	0,17	0,076206897
Forklifts	2018	51	120	Forklifts_2018_120	0,675301	0,567	3,85819	5,0153	0,005	0,4	0,368	489,8657	0,153	0,068586207
Forklifts	2018	121	175	Forklifts_2018_175	0,508414	0,427	3,33646	4,42984	0,005	0,241	0,222	490,4659	0,153	0,068586207
Forklifts	2018	176	250	Forklifts_2018_250	0,506009	0,425	1,83475	4,93757	0,005	0,207	0,191	491,7326	0,153	0,068586207
Forklifts	2018	251	500	Forklifts_2018_500	0,335655	0,282	1,87814	3,01864	0,005	0,125	0,115	492,0335	0,153	0,068586207
Forklifts	2019	26	50	Forklifts_2019_50	1,480074	1,244	5,88034	4,86189	0,005	0,401	0,369	537,1608	0,17	0,076206897
Forklifts	2019	51	120	Forklifts_2019_120	0,606336	0,509	3,80391	4,54965	0,005	0,352	0,324	482,0069	0,153	0,068586207

Forklifts	2019	121	175	Forklifts_2019_175	0,454984	0,382	3,28831	3,86458	0,005	0,21	0,193	482,5975	0,153	0,068586207
Forklifts	2019	176	250	Forklifts_2019_250	0,445406	0,374	1,6773	4,2498	0,005	0,175	0,161	483,8438	0,153	0,068586207
Forklifts	2019	251	500	Forklifts_2019_500	0,31829	0,267	1,814	2,75148	0,005	0,112	0,103	484,1399	0,153	0,068586207
Forklifts	2020	26	50	Forklifts_2020_50	1,337399	1,124	5,70563	4,68572	0,005	0,36	0,331	525,4833	0,17	0,076206897
Forklifts	2020	51	120	Forklifts_2020_120	0,545921	0,459	3,75954	4,13299	0,005	0,308	0,283	471,5285	0,153	0,068586207
Forklifts	2020	121	175	Forklifts_2020_175	0,402357	0,338	3,24885	3,3196	0,005	0,18	0,165	472,1062	0,153	0,068586207
Forklifts	2020	176	250	Forklifts_2020_250	0,348476	0,293	1,44178	3,24149	0,005	0,126	0,116	473,3255	0,153	0,068586207
Forklifts	2020	251	500	Forklifts_2020_500	0,299035	0,251	1,47807	2,43991	0,005	0,097	0,089	473,6151	0,153	0,068586207
Forklifts	2021	26	50	Forklifts_2021_50	1,192536	1,002	5,53477	4,5202	0,005	0,318	0,292	525,4833	0,17	0,076206897
Forklifts	2021	51	120	Forklifts_2021_120	0,490261	0,412	3,72	3,75592	0,005	0,267	0,245	471,5285	0,153	0,068586207
Forklifts	2021	121	175	Forklifts_2021_175	0,366939	0,308	3,23128	2,9207	0,005	0,158	0,145	472,1062	0,153	0,068586207
Forklifts	2021	176	250	Forklifts_2021_250	0,296154	0,249	1,33672	2,58195	0,005	0,099	0,091	473,3255	0,153	0,068586207
Forklifts	2021	251	500	Forklifts_2021_500	0,301833	0,254	1,48481	2,30266	0,005	0,094	0,086	473,6151	0,153	0,068586207
Forklifts	2022	26	50	Forklifts_2022_50	1,02259	0,859	5,30418	4,31214	0,005	0,27	0,248	525,4833	0,17	0,076206897
Forklifts	2022	51	120	Forklifts_2022_120	0,430627	0,362	3,67507	3,36021	0,005	0,223	0,205	471,5285	0,153	0,068586207
Forklifts	2022	121	175	Forklifts_2022_175	0,324265	0,272	3,19749	2,47982	0,005	0,132	0,122	472,1062	0,153	0,068586207
Forklifts	2022	176	250	Forklifts_2022_250	0,280841	0,236	1,3171	2,31941	0,005	0,09	0,083	473,3255	0,153	0,068586207
Forklifts	2022	251	500	Forklifts_2022_500	0,275829	0,232	1,21922	1,99119	0,005	0,077	0,071	473,6151	0,153	0,068586207
Forklifts	2023	26	50	Forklifts_2023_50	0,911766	0,766	5,16597	4,15219	0,005	0,232	0,213	525,4833	0,17	0,076206897
Forklifts	2023	51	120	Forklifts_2023_120	0,388709	0,327	3,64655	3,0569	0,005	0,189	0,174	471,5285	0,153	0,068586207
Forklifts	2023	121	175	Forklifts_2023_175	0,289923	0,244	3,1799	2,11214	0,005	0,111	0,102	472,1062	0,153	0,068586207
Forklifts	2023	176	250	Forklifts_2023_250	0,242474	0,204	1,23515	1,80718	0,005	0,069	0,063	473,3255	0,153	0,068586207
Forklifts	2023	251	500	Forklifts_2023_500	0,261765	0,22	1,21596	1,78772	0,005	0,069	0,063	473,6151	0,153	0,068586207
Forklifts	2024	26	50	Forklifts_2024_50	0,823848	0,692	5,0885	4,03948	0,005	0,203	0,187	525,4833	0,17	0,076206897
Forklifts	2024	51	120	Forklifts_2024_120	0,357083	0,3	3,62907	2,81432	0,005	0,163	0,15	471,5285	0,153	0,068586207
Forklifts	2024	121	175	Forklifts_2024_175	0,266701	0,224	3,17389	1,86129	0,005	0,096	0,088	472,1062	0,153	0,068586207
Forklifts	2024	176	250	Forklifts_2024_250	0,232645	0,195	1,21846	1,6253	0,005	0,061	0,056	473,3255	0,153	0,068586207
Forklifts	2024	251	500	Forklifts_2024_500	0,258844	0,218	1,21901	1,72336	0,005	0,065	0,06	473,6151	0,153	0,068586207
Forklifts	2025	26	50	Forklifts_2025_50	0,757155	0,636	5,02929	3,93206	0,005	0,178	0,164	525,4833	0,17	0,076206897
Forklifts	2025	51	120	Forklifts_2025_120	0,329382	0,277	3,61138	2,60732	0,005	0,14	0,128	471,5285	0,153	0,068586207
Forklifts	2025	121	175	Forklifts_2025_175	0,248361	0,209	3,17013	1,653	0,005	0,084	0,078	472,1062	0,153	0,068586207
Forklifts	2025	176	250	Forklifts_2025_250	0,226669	0,19	1,2143	1,46623	0,005	0,056	0,052	473,3255	0,153	0,068586207
Forklifts	2025	251	500	Forklifts_2025_500	0,255656	0,215	1,22207	1,65848	0,005	0,062	0,057	473,6151	0,153	0,068586207
Forklifts	2030	26	50	Forklifts_2030_50	1,388	0,565	5,272	3,33	0,007	0,023	0,023	568,299	0,051	0,022862069
Forklifts	2030	51	120	Forklifts_2030_120	1,48	0,283	3,799	1,555	0,006	0,021	0,021	568,299	0,025	0,011206897
Forklifts	2030	121	175	Forklifts_2030_175	1,875	0,199	3,36	0,391	0,006	0,015	0,015	568,299	0,018	0,008068966
Forklifts	2030	176	250	Forklifts_2030_250	2,524	0,195	1,144	0,341	0,006	0,012	0,012	568,299	0,017	0,00762069
Forklifts	2030	251	500	Forklifts_2030_500	3,633	0,195	1,088	0,341	0,005	0,012	0,012	568,299	0,017	0,00762069
Forklifts	2035	26	50	Forklifts_2035_50	1,371	0,558	5,234	3,268	0,007	0,017	0,017	568,299	0,05	0,022413793
Forklifts	2035	51	120	Forklifts_2035_120	1,438	0,275	3,787	1,495	0,006	0,016	0,016	568,299	0,024	0,010758621
Forklifts	2035	121	175	Forklifts_2035_175	1,775	0,189	3,35	0,299	0,006	0,012	0,012	568,3	0,017	0,00762069
Forklifts	2035	176	250	Forklifts_2035_250	2,433	0,188	1,141	0,29	0,006	0,011	0,011	568,3	0,017	0,00762069
Forklifts	2035	251	500	Forklifts_2035_500	3,502	0,188	1,085	0,29	0,005	0,011	0,011	568,299	0,017	0,00762069
Forklifts	2040	26	50	Forklifts_2040_50	1,38	0,562	5,256	3,272	0,007	0,017	0,017	568,299	0,05	0,022413793
Forklifts	2040	51	120	Forklifts_2040_120	1,444	0,276	3,794	1,491	0,006	0,016	0,016	568,299	0,024	0,010758621
Forklifts	2040	121	175	Forklifts_2040_175	1,777	0,189	3,356	0,288	0,006	0,012	0,012	568,299	0,017	0,00762069
Forklifts	2040	176	250	Forklifts_2040_250	2,445	0,189	1,143	0,288	0,006	0,011	0,011	568,299	0,017	0,00762069
Forklifts	2040	251	500	Forklifts_2040_500	3,518	0,189	1,087	0,288	0,005	0,011	0,011	568,299	0,017	0,00762069
Generator Sets	1990	6	15	Generator Sets_1990_15	4,791	1,804	4,999	10	1,018	0,974	0,974	568,299	0,162	0,07262069
Generator Sets	1990	16	25	Generator Sets_1990_25	10,151	2,213	4,999	6,919	0,83	0,74	0,74	568,299	0,199	0,089206897
Generator Sets	1990	26	50	Generator Sets_1990_50	24,936	3,13	6,681	7,325	0,846	0,928	0,928	568,299	0,282	0,126413793
Generator Sets	1990	51	120	Generator Sets_1990_120	38,362	1,891	4,97	13,19	0,768	0,985	0,985	568,299	0,17	0,076206897
Generator Sets	1990	121	175	Generator Sets_1990_175	47,754	1,292	4,395	11,864	0,736	0,653	0,653	568,3	0,116	0,052
Generator Sets	1990	176	250	Generator Sets_1990_250	71,475	1,292	4,395	11,864	0,736	0,653	0,653	568,299	0,116	0,052
Generator Sets	1990	251	500	Generator Sets_1990_500	104,891	1,196	6,53	11,613	0,642	0,596	0,596	568,299	0,107	0,047965517
Generator Sets	1990	501	750	Generator Sets_1990_750	169,323	1,196	6,53	11,612	0,658	0,596	0,596	568,299	0,107	0,047965517
Generator Sets	1990	1001	9999	Generator Sets_1990_9999	326,002	1,195	6,53	11,612	0,658	0,594	0,594	568,299	0,107	0,047965517
Generator Sets	2000	6	15	Generator Sets_2000_15	4,033	1,518	4,875	8,846	0,079	0,613	0,613	568,299	0,137	0,061413793
Generator Sets	2000	16	25	Generator Sets_2000_25	7,648	1,667	4,783	6,405	0,065	0,51	0,51	568,299	0,15	0,067241379
Generator Sets	2000	26	50	Generator Sets_2000_50	23,582	2,96	6,415	6,55	0,066	0,692	0,692	568,299	0,267	0,119689655
Generator Sets	2000	51	120	Generator Sets_2000_120	31,137	1,535	4,158	9,468	0,06	0,686	0,686	568,299	0,138	0,061862069
Generator Sets	2000	121	175	Generator Sets_2000_175	38,027	1,029	3,381	8,612	0,057	0,404	0,404	568,299	0,092	0,041241379
Generator Sets	2000	176	250	Generator Sets_2000_250	46,981	0,849	2,656	8,277	0,057	0,325	0,325	568,299	0,076	0,034068966
Generator Sets	2000	251	500	Generator Sets_2000_500	70,308	0,802	3,7	8,102	0,05	0,301	0,301	568,299	0,072	0,032275862
Generator Sets	2000	501	750	Generator Sets_2000_750	113,5	0,802	3,7	8,102	0,051	0,301	0,301	568,3	0,072	0,032275862
Generator Sets	2000	1001	9999	Generator Sets_2000_9999	251,503	0,921	4,274	8,686	0,051	0,344	0,344	568,299	0,083	0,037206897
Generator Sets	2005	6	15	Generator Sets_2005_15	3,219	1,212	4,38	7,615	0,079	0,505	0,505	568,299	0,109	0,048862069
Generator Sets	2005	16	25	Generator Sets_2005_25	5,748	1,253	3,922	6,014	0,065	0,432	0,432	568,299	0,113	0,050655172
Generator Sets	2005	26	50	Generator Sets_2005_50	20,78	2,608	5,919	6,099	0,066	0,64	0,64	568,3	0,235	0,105344828
Generator Sets	2005	51	120	Generator Sets_2005_120	26,634	1,313	3,853	7,987	0,06	0,634	0,634	568,299	0,118	0,052896552
Generator Sets	2005	121	175	Generator Sets_2005_175	31,579	0,854	3,067	7,306	0,057	0,35	0,35	568,299	0,077	0,034517241
Generator Sets	2005	176	250	Generator Sets_2005_250	33,443	0,604	1,801	6,892	0,057	0,229	0,229	568,299	0,054	0,024206897
Generator Sets	2005	251	500	Generator Sets_2005_500	47,834	0,545	2,206	6,465	0,05	0,211	0,211	568,299	0,049	0,021965517

Generator Sets	2005	501	750	Generator Sets_2005_750	79,444	0,561	2,206	6,609	0,051	0,214	0,214	568,3	0,05	0,022413793
Generator Sets	2005	1001	9999	Generator Sets_2005_9999	195,712	0,717	2,719	7,582	0,051	0,255	0,255	568,299	0,064	0,028689655
Generator Sets	2010	6	15	Generator Sets_2010_15	2,532	0,953	4,027	6,387	0,008	0,38	0,38	568,299	0,086	0,038551724
Generator Sets	2010	16	25	Generator Sets_2010_25	4,408	0,961	3,309	5,477	0,007	0,342	0,342	568,299	0,086	0,038551724
Generator Sets	2010	26	50	Generator Sets_2010_50	16,299	2,045	5,353	5,68	0,007	0,522	0,522	568,299	0,184	0,082482759
Generator Sets	2010	51	120	Generator Sets_2010_120	20,399	1,005	3,677	6,573	0,006	0,516	0,516	568,299	0,09	0,040344828
Generator Sets	2010	121	175	Generator Sets_2010_175	24,447	0,661	2,986	5,87	0,006	0,286	0,286	568,299	0,059	0,026448276
Generator Sets	2010	176	250	Generator Sets_2010_250	23,668	0,428	1,333	5,501	0,006	0,163	0,163	568,299	0,038	0,017034483
Generator Sets	2010	251	500	Generator Sets_2010_500	33,685	0,384	1,482	5,015	0,005	0,153	0,153	568,299	0,034	0,015241379
Generator Sets	2010	501	750	Generator Sets_2010_750	56,116	0,396	1,482	5,147	0,005	0,155	0,155	568,299	0,035	0,015689655
Generator Sets	2010	1001	9999	Generator Sets_2010_9999	147,466	0,54	1,93	6,544	0,005	0,193	0,193	568,299	0,048	0,021517241
Generator Sets	2011	6	15	Generator Sets_2011_15	2,413	0,908	3,952	6,134	0,008	0,358	0,358	568,299	0,081	0,036310345
Generator Sets	2011	16	25	Generator Sets_2011_25	4,22	0,92	3,179	5,36	0,007	0,325	0,325	568,299	0,083	0,037206897
Generator Sets	2011	26	50	Generator Sets_2011_50	15,152	1,901	5,2	5,585	0,007	0,495	0,495	568,3	0,171	0,076655172
Generator Sets	2011	51	120	Generator Sets_2011_120	19,003	0,937	3,64	6,226	0,006	0,493	0,493	568,299	0,084	0,037655172
Generator Sets	2011	121	175	Generator Sets_2011_175	22,889	0,619	2,974	5,544	0,006	0,274	0,274	568,299	0,055	0,024655172
Generator Sets	2011	176	250	Generator Sets_2011_250	21,62	0,391	1,249	5,125	0,006	0,147	0,147	568,299	0,035	0,015689655
Generator Sets	2011	251	500	Generator Sets_2011_500	30,74	0,35	1,36	4,654	0,005	0,138	0,138	568,299	0,031	0,013896552
Generator Sets	2011	501	750	Generator Sets_2011_750	51,271	0,362	1,36	4,784	0,005	0,14	0,14	568,299	0,032	0,014344828
Generator Sets	2011	1001	9999	Generator Sets_2011_9999	137,042	0,502	1,784	6,202	0,005	0,18	0,18	568,299	0,045	0,020172414
Generator Sets	2012	6	15	Generator Sets_2012_15	2,298	0,865	3,874	5,874	0,008	0,338	0,338	568,299	0,078	0,034965517
Generator Sets	2012	16	25	Generator Sets_2012_25	4,059	0,884	3,043	5,239	0,007	0,307	0,307	568,299	0,079	0,035413793
Generator Sets	2012	26	50	Generator Sets_2012_50	13,912	1,746	5,03	5,485	0,007	0,466	0,466	568,299	0,157	0,07037931
Generator Sets	2012	51	120	Generator Sets_2012_120	17,544	0,865	3,603	5,848	0,006	0,46	0,46	568,299	0,078	0,034965517
Generator Sets	2012	121	175	Generator Sets_2012_175	21,243	0,575	2,963	5,198	0,006	0,254	0,254	568,299	0,051	0,022862069
Generator Sets	2012	176	250	Generator Sets_2012_250	19,998	0,361	1,196	4,77	0,006	0,133	0,133	568,3	0,032	0,014344828
Generator Sets	2012	251	500	Generator Sets_2012_500	28,44	0,324	1,275	4,315	0,005	0,125	0,125	568,299	0,029	0,013
Generator Sets	2012	501	750	Generator Sets_2012_750	47,464	0,335	1,275	4,441	0,005	0,127	0,127	568,299	0,03	0,013448276
Generator Sets	2012	1001	9999	Generator Sets_2012_9999	126,39	0,463	1,639	5,849	0,005	0,166	0,166	568,3	0,041	0,01837931
Generator Sets	2013	6	15	Generator Sets_2013_15	2,187	0,823	3,796	5,616	0,008	0,318	0,318	568,299	0,074	0,033172414
Generator Sets	2013	16	25	Generator Sets_2013_25	3,907	0,851	2,907	5,117	0,007	0,289	0,289	568,299	0,076	0,034068966
Generator Sets	2013	26	50	Generator Sets_2013_50	12,634	1,585	4,854	5,263	0,007	0,428	0,428	568,299	0,143	0,064103448
Generator Sets	2013	51	120	Generator Sets_2013_120	16,078	0,792	3,567	5,478	0,006	0,424	0,424	568,299	0,071	0,031827586
Generator Sets	2013	121	175	Generator Sets_2013_175	19,587	0,53	2,953	4,873	0,006	0,233	0,233	568,299	0,047	0,021068966
Generator Sets	2013	176	250	Generator Sets_2013_250	18,602	0,336	1,16	4,428	0,006	0,122	0,122	568,299	0,03	0,013448276
Generator Sets	2013	251	500	Generator Sets_2013_500	26,484	0,302	1,211	3,989	0,005	0,114	0,114	568,299	0,027	0,012103448
Generator Sets	2013	501	750	Generator Sets_2013_750	44,22	0,312	1,211	4,113	0,005	0,116	0,116	568,299	0,028	0,012551724
Generator Sets	2013	1001	9999	Generator Sets_2013_9999	115,946	0,425	1,502	5,494	0,005	0,152	0,152	568,299	0,038	0,017034483
Generator Sets	2014	6	15	Generator Sets_2014_15	2,081	0,783	3,723	5,369	0,008	0,298	0,298	568,299	0,07	0,03137931
Generator Sets	2014	16	25	Generator Sets_2014_25	3,767	0,821	2,78	5	0,007	0,272	0,272	568,299	0,074	0,033172414
Generator Sets	2014	26	50	Generator Sets_2014_50	11,368	1,427	4,683	5,048	0,007	0,389	0,389	568,299	0,128	0,05737931
Generator Sets	2014	51	120	Generator Sets_2014_120	14,638	0,721	3,532	5,147	0,006	0,385	0,385	568,299	0,065	0,029137931
Generator Sets	2014	121	175	Generator Sets_2014_175	17,974	0,486	2,945	4,565	0,006	0,212	0,212	568,299	0,043	0,019275862
Generator Sets	2014	176	250	Generator Sets_2014_250	17,205	0,311	1,13	4,025	0,006	0,111	0,111	568,3	0,028	0,012551724
Generator Sets	2014	251	500	Generator Sets_2014_500	24,516	0,279	1,157	3,603	0,005	0,104	0,104	568,299	0,025	0,011206897
Generator Sets	2014	501	750	Generator Sets_2014_750	40,956	0,289	1,157	3,724	0,005	0,106	0,106	568,299	0,026	0,011655172
Generator Sets	2014	1001	9999	Generator Sets_2014_9999	106,127	0,389	1,377	5,15	0,005	0,138	0,138	568,299	0,035	0,015689655
Generator Sets	2015	6	15	Generator Sets_2015_15	1,984	0,747	3,658	5,141	0,008	0,28	0,28	568,299	0,067	0,030034483
Generator Sets	2015	16	25	Generator Sets_2015_25	3,639	0,793	2,666	4,89	0,007	0,256	0,256	568,299	0,071	0,031827586
Generator Sets	2015	26	50	Generator Sets_2015_50	10,213	1,281	4,538	4,858	0,007	0,353	0,353	568,299	0,115	0,051551724
Generator Sets	2015	51	120	Generator Sets_2015_120	13,208	0,651	3,499	4,769	0,006	0,347	0,347	568,299	0,058	0,026
Generator Sets	2015	121	175	Generator Sets_2015_175	16,277	0,44	2,938	4,138	0,006	0,191	0,191	568,299	0,039	0,017482759
Generator Sets	2015	176	250	Generator Sets_2015_250	15,884	0,287	1,104	3,633	0,006	0,1	0,1	568,3	0,025	0,011206897
Generator Sets	2015	251	500	Generator Sets_2015_500	22,677	0,258	1,114	3,231	0,005	0,094	0,094	568,299	0,023	0,010310345
Generator Sets	2015	501	750	Generator Sets_2015_750	37,88	0,267	1,114	3,347	0,005	0,096	0,096	568,299	0,024	0,010758621
Generator Sets	2015	1001	9999	Generator Sets_2015_9999	95,984	0,351	1,269	4,822	0,005	0,124	0,124	568,299	0,031	0,013896552
Generator Sets	2016	6	15	Generator Sets_2016_15	1,914	0,72	3,622	4,978	0,008	0,264	0,264	568,299	0,065	0,029137931
Generator Sets	2016	16	25	Generator Sets_2016_25	3,548	0,773	2,604	4,803	0,007	0,244	0,244	568,299	0,069	0,030931034
Generator Sets	2016	26	50	Generator Sets_2016_50	9,132	1,146	4,41	4,685	0,007	0,318	0,318	568,299	0,103	0,046172414
Generator Sets	2016	51	120	Generator Sets_2016_120	11,84	0,583	3,469	4,41	0,006	0,309	0,309	568,299	0,052	0,023310345
Generator Sets	2016	121	175	Generator Sets_2016_175	14,658	0,396	2,934	3,731	0,006	0,17	0,17	568,299	0,035	0,015689655
Generator Sets	2016	176	250	Generator Sets_2016_250	14,652	0,265	1,081	3,259	0,006	0,09	0,09	568,299	0,023	0,010310345
Generator Sets	2016	251	500	Generator Sets_2016_500	21,002	0,239	1,077	2,882	0,005	0,084	0,084	568,299	0,021	0,009413793
Generator Sets	2016	501	750	Generator Sets_2016_750	35,041	0,247	1,077	2,989	0,005	0,086	0,086	568,3	0,022	0,009862069
Generator Sets	2016	1001	9999	Generator Sets_2016_9999	88,441	0,324	1,204	4,542	0,005	0,113	0,113	568,299	0,029	0,013
Generator Sets	2017	6	15	Generator Sets_2017_15	1,857	0,699	3,599	4,847	0,008	0,25	0,25	568,299	0,063	0,028241379
Generator Sets	2017	16	25	Generator Sets_2017_25	3,476	0,757	2,564	4,729	0,007	0,233	0,233	568,299	0,068	0,030482759
Generator Sets	2017	26	50	Generator Sets_2017_50	8,107	1,017	4,292	4,522	0,007	0,285	0,285	568,299	0,091	0,040793103
Generator Sets	2017	51	120	Generator Sets_2017_120	10,557	0,52	3,442	4,072	0,006	0,274	0,274	568,299	0,046	0,02062069
Generator Sets	2017	121	175	Generator Sets_2017_175	13,162	0,356	2,931	3,347	0,006	0,151	0,151	568,299	0,032	0,014344828
Generator Sets	2017	176	250	Generator Sets_2017_250	13,548	0,245	1,063	2,91	0,006	0,081	0,081	568,299	0,022	0,009862069
Generator Sets	2017	251	500	Generator Sets_2017_500	19,649	0,224	1,048	2,579	0,005	0,076	0,076	568,299	0,02	0,008965517
Generator Sets	2017	501	750	Generator Sets_2017_750	32,544	0,23	1,048	2,66	0,005	0,077	0,077	568,299	0,02	0,008965517

Generator Sets	2017	1001	9999	Generator Sets_2017_9999	82,27	0,301	1,161	4,293	0,005	0,104	0,104	568,299	0,027	0,012103448
Generator Sets	2018	6	15	Generator Sets_2018_15	1,805	0,679	3,58	4,728	0,008	0,237	0,237	568,299	0,061	0,027344828
Generator Sets	2018	16	25	Generator Sets_2018_25	3,412	0,744	2,531	4,661	0,007	0,224	0,224	568,299	0,067	0,030034483
Generator Sets	2018	26	50	Generator Sets_2018_50	7,133	0,895	4,182	4,366	0,007	0,253	0,253	568,299	0,08	0,035862069
Generator Sets	2018	51	120	Generator Sets_2018_120	9,356	0,461	3,418	3,752	0,006	0,239	0,239	568,299	0,041	0,01837931
Generator Sets	2018	121	175	Generator Sets_2018_175	11,794	0,319	2,93	2,989	0,006	0,133	0,133	568,299	0,028	0,012551724
Generator Sets	2018	176	250	Generator Sets_2018_250	12,549	0,226	1,048	2,582	0,006	0,072	0,072	568,299	0,02	0,008965517
Generator Sets	2018	251	500	Generator Sets_2018_500	18,523	0,211	1,028	2,31	0,005	0,069	0,069	568,299	0,019	0,008517241
Generator Sets	2018	501	750	Generator Sets_2018_750	30,476	0,215	1,028	2,37	0,005	0,07	0,07	568,299	0,019	0,008517241
Generator Sets	2018	1001	9999	Generator Sets_2018_9999	76,62	0,28	1,128	4,058	0,005	0,095	0,095	568,299	0,025	0,011206897
Generator Sets	2019	6	15	Generator Sets_2019_15	1,758	0,662	3,562	4,617	0,008	0,224	0,224	568,299	0,059	0,026448276
Generator Sets	2019	16	25	Generator Sets_2019_25	3,356	0,731	2,501	4,596	0,007	0,214	0,214	568,299	0,066	0,029586207
Generator Sets	2019	26	50	Generator Sets_2019_50	6,208	0,779	4,076	4,215	0,007	0,222	0,222	568,299	0,07	0,03137931
Generator Sets	2019	51	120	Generator Sets_2019_120	8,233	0,405	3,396	3,446	0,006	0,206	0,206	568,299	0,036	0,016137931
Generator Sets	2019	121	175	Generator Sets_2019_175	10,727	0,29	2,929	2,669	0,006	0,118	0,118	568,299	0,026	0,011655172
Generator Sets	2019	176	250	Generator Sets_2019_250	11,695	0,211	1,036	2,285	0,006	0,064	0,064	568,299	0,019	0,008517241
Generator Sets	2019	251	500	Generator Sets_2019_500	17,492	0,199	1,015	2,056	0,005	0,062	0,062	568,299	0,018	0,008068966
Generator Sets	2019	501	750	Generator Sets_2019_750	28,675	0,202	1,015	2,104	0,005	0,062	0,062	568,299	0,018	0,008068966
Generator Sets	2019	1001	9999	Generator Sets_2019_9999	71,228	0,261	1,103	3,829	0,005	0,087	0,087	568,299	0,023	0,010310345
Generator Sets	2020	6	15	Generator Sets_2020_15	1,715	0,646	3,546	4,516	0,008	0,212	0,212	568,299	0,058	0,026
Generator Sets	2020	16	25	Generator Sets_2020_25	3,307	0,721	2,473	4,538	0,007	0,205	0,205	568,299	0,065	0,029137931
Generator Sets	2020	26	50	Generator Sets_2020_50	5,508	0,691	3,995	4,075	0,007	0,194	0,194	568,299	0,062	0,027793103
Generator Sets	2020	51	120	Generator Sets_2020_120	7,383	0,364	3,38	3,173	0,006	0,179	0,179	568,299	0,032	0,014344828
Generator Sets	2020	121	175	Generator Sets_2020_175	9,884	0,267	2,93	2,38	0,006	0,105	0,105	568,299	0,024	0,010758621
Generator Sets	2020	176	250	Generator Sets_2020_250	10,963	0,198	1,026	2,016	0,006	0,057	0,057	568,299	0,017	0,00762069
Generator Sets	2020	251	500	Generator Sets_2020_500	16,528	0,188	1,005	1,816	0,005	0,055	0,055	568,299	0,017	0,00762069
Generator Sets	2020	501	750	Generator Sets_2020_750	27,045	0,191	1,005	1,858	0,005	0,056	0,056	568,299	0,017	0,00762069
Generator Sets	2020	1001	9999	Generator Sets_2020_9999	66,08	0,242	1,082	3,608	0,005	0,079	0,079	568,3	0,021	0,009413793
Generator Sets	2021	6	15	Generator Sets_2021_15	1,683	0,634	3,531	4,441	0,008	0,201	0,201	568,299	0,057	0,025551724
Generator Sets	2021	16	25	Generator Sets_2021_25	3,268	0,712	2,446	4,497	0,007	0,196	0,196	568,299	0,064	0,028689655
Generator Sets	2021	26	50	Generator Sets_2021_50	4,884	0,613	3,905	3,916	0,007	0,165	0,165	568,299	0,055	0,024655172
Generator Sets	2021	51	120	Generator Sets_2021_120	6,62	0,326	3,361	2,888	0,006	0,153	0,153	568,299	0,029	0,013
Generator Sets	2021	121	175	Generator Sets_2021_175	8,995	0,243	2,925	2,068	0,006	0,091	0,091	568,299	0,021	0,009413793
Generator Sets	2021	176	250	Generator Sets_2021_250	10,146	0,183	1,016	1,73	0,006	0,049	0,049	568,299	0,016	0,007172414
Generator Sets	2021	251	500	Generator Sets_2021_500	15,395	0,175	0,996	1,562	0,005	0,048	0,048	568,299	0,015	0,006724138
Generator Sets	2021	501	750	Generator Sets_2021_750	25,135	0,177	0,996	1,596	0,005	0,048	0,048	568,299	0,016	0,007172414
Generator Sets	2021	1001	9999	Generator Sets_2021_9999	60,247	0,22	1,06	3,372	0,005	0,07	0,07	568,3	0,019	0,008517241
Generator Sets	2022	6	15	Generator Sets_2022_15	1,662	0,626	3,519	4,39	0,008	0,193	0,193	568,299	0,056	0,025103448
Generator Sets	2022	16	25	Generator Sets_2022_25	3,242	0,706	2,426	4,47	0,007	0,188	0,188	568,299	0,063	0,028241379
Generator Sets	2022	26	50	Generator Sets_2022_50	4,466	0,56	3,858	3,796	0,007	0,143	0,143	568,299	0,05	0,022413793
Generator Sets	2022	51	120	Generator Sets_2022_120	6,113	0,301	3,353	2,671	0,006	0,134	0,134	568,299	0,027	0,012103448
Generator Sets	2022	121	175	Generator Sets_2022_175	8,363	0,226	2,926	1,83	0,006	0,081	0,081	568,299	0,02	0,008965517
Generator Sets	2022	176	250	Generator Sets_2022_250	9,575	0,173	1,01	1,508	0,006	0,043	0,043	568,299	0,015	0,006724138
Generator Sets	2022	251	500	Generator Sets_2022_500	14,616	0,166	0,99	1,384	0,005	0,042	0,042	568,299	0,015	0,006724138
Generator Sets	2022	501	750	Generator Sets_2022_750	23,822	0,168	0,99	1,412	0,005	0,043	0,043	568,299	0,015	0,006724138
Generator Sets	2022	1001	9999	Generator Sets_2022_9999	56,346	0,206	1,045	3,202	0,005	0,063	0,063	568,299	0,018	0,008068966
Generator Sets	2023	6	15	Generator Sets_2023_15	1,643	0,618	3,508	4,345	0,008	0,186	0,186	568,299	0,055	0,024655172
Generator Sets	2023	16	25	Generator Sets_2023_25	3,219	0,701	2,407	4,447	0,007	0,182	0,182	568,299	0,063	0,028241379
Generator Sets	2023	26	50	Generator Sets_2023_50	4,102	0,514	3,819	3,685	0,007	0,124	0,124	568,299	0,046	0,02062069
Generator Sets	2023	51	120	Generator Sets_2023_120	5,671	0,279	3,347	2,477	0,006	0,117	0,117	568,299	0,025	0,011206897
Generator Sets	2023	121	175	Generator Sets_2023_175	7,812	0,211	2,927	1,635	0,006	0,071	0,071	568,299	0,019	0,008517241
Generator Sets	2023	176	250	Generator Sets_2023_250	9,077	0,164	1,006	1,328	0,006	0,038	0,038	568,299	0,014	0,006275862
Generator Sets	2023	251	500	Generator Sets_2023_500	13,922	0,158	0,986	1,228	0,005	0,037	0,037	568,299	0,014	0,006275862
Generator Sets	2023	501	750	Generator Sets_2023_750	22,664	0,16	0,986	1,253	0,005	0,037	0,037	568,299	0,014	0,006275862
Generator Sets	2023	1001	9999	Generator Sets_2023_9999	53,06	0,194	1,031	3,058	0,005	0,058	0,058	568,299	0,017	0,00762069
Generator Sets	2024	6	15	Generator Sets_2024_15	1,627	0,612	3,499	4,305	0,008	0,181	0,181	568,299	0,055	0,024655172
Generator Sets	2024	16	25	Generator Sets_2024_25	3,2	0,697	2,39	4,426	0,007	0,178	0,178	568,299	0,062	0,027793103
Generator Sets	2024	26	50	Generator Sets_2024_50	3,789	0,475	3,787	3,582	0,007	0,107	0,107	568,299	0,042	0,018827586
Generator Sets	2024	51	120	Generator Sets_2024_120	5,287	0,26	3,342	2,321	0,006	0,101	0,101	568,299	0,023	0,010310345
Generator Sets	2024	121	175	Generator Sets_2024_175	7,312	0,197	2,929	1,462	0,006	0,062	0,062	568,299	0,017	0,00762069
Generator Sets	2024	176	250	Generator Sets_2024_250	8,611	0,155	1,003	1,169	0,006	0,033	0,033	568,299	0,014	0,006275862
Generator Sets	2024	251	500	Generator Sets_2024_500	13,26	0,151	0,983	1,082	0,005	0,032	0,032	568,3	0,013	0,005827586
Generator Sets	2024	501	750	Generator Sets_2024_750	21,567	0,152	0,983	1,104	0,005	0,032	0,032	568,299	0,013	0,005827586
Generator Sets	2024	1001	9999	Generator Sets_2024_9999	50,108	0,183	1,018	2,929	0,005	0,052	0,052	568,3	0,016	0,007172414
Generator Sets	2025	6	15	Generator Sets_2025_15	1,613	0,607	3,491	4,269	0,008	0,178	0,178	568,299	0,054	0,024206897
Generator Sets	2025	16	25	Generator Sets_2025_25	3,185	0,694	2,376	4,407	0,007	0,175	0,175	568,299	0,062	0,027793103
Generator Sets	2025	26	50	Generator Sets_2025_50	3,511	0,44	3,758	3,481	0,007	0,093	0,093	568,3	0,039	0,017482759
Generator Sets	2025	51	120	Generator Sets_2025_120	4,942	0,243	3,338	2,185	0,006	0,087	0,087	568,299	0,021	0,009413793
Generator Sets	2025	121	175	Generator Sets_2025_175	6,832	0,184	2,93	1,297	0,006	0,053	0,053	568,299	0,016	0,007172414
Generator Sets	2025	176	250	Generator Sets_2025_250	8,168	0,147	1	1,02	0,006	0,028	0,028	568,299	0,013	0,005827586
Generator Sets	2025	251	500	Generator Sets_2025_500	12,627	0,144	0,981	0,945	0,005	0,027	0,027	568,3	0,013	0,005827586
Generator Sets	2025	501	750	Generator Sets_2025_750	20,518	0,145	0,981	0,964	0,005	0,027	0,027	568,299	0,013	0,005827586
Generator Sets	2025	1001	9999	Generator Sets_2025_9999	47,32	0,173	1,008	2,812	0,005	0,047	0,047	568,299	0,015	0,006724138

Generator Sets	2030	6	15	Generator Sets_2030_15	1,573	0,592	3,47	4,164	0,008	0,166	0,166	568,299	0,053	0,023758621
Generator Sets	2030	16	25	Generator Sets_2030_25	3,15	0,686	2,34	4,347	0,007	0,165	0,165	568,299	0,061	0,027344828
Generator Sets	2030	26	50	Generator Sets_2030_50	2,512	0,315	3,64	3,107	0,007	0,038	0,038	568,299	0,028	0,012551724
Generator Sets	2030	51	120	Generator Sets_2030_120	3,616	0,178	3,316	1,645	0,006	0,034	0,034	568,299	0,016	0,007172414
Generator Sets	2030	121	175	Generator Sets_2030_175	4,837	0,13	2,929	0,601	0,006	0,023	0,023	568,299	0,011	0,004931034
Generator Sets	2030	176	250	Generator Sets_2030_250	6,637	0,12	0,998	0,504	0,006	0,016	0,016	568,299	0,01	0,004482759
Generator Sets	2030	251	500	Generator Sets_2030_500	10,441	0,119	0,978	0,476	0,005	0,015	0,015	568,299	0,01	0,004482759
Generator Sets	2030	501	750	Generator Sets_2030_750	16,888	0,119	0,978	0,482	0,005	0,015	0,015	568,299	0,01	0,004482759
Generator Sets	2030	1001	9999	Generator Sets_2030_9999	35,17	0,128	0,979	2,483	0,005	0,029	0,029	568,299	0,011	0,004931034
Generator Sets	2035	6	15	Generator Sets_2035_15	1,565	0,589	3,47	4,143	0,008	0,162	0,162	568,299	0,053	0,023758621
Generator Sets	2035	16	25	Generator Sets_2035_25	3,144	0,685	2,34	4,332	0,007	0,162	0,162	568,299	0,061	0,027344828
Generator Sets	2035	26	50	Generator Sets_2035_50	2,206	0,276	3,607	2,991	0,007	0,018	0,018	568,299	0,024	0,010758621
Generator Sets	2035	51	120	Generator Sets_2035_120	3,176	0,156	3,31	1,458	0,006	0,016	0,016	568,299	0,014	0,006275862
Generator Sets	2035	121	175	Generator Sets_2035_175	4,187	0,113	2,929	0,373	0,006	0,013	0,013	568,299	0,01	0,004482759
Generator Sets	2035	176	250	Generator Sets_2035_250	6,1	0,11	0,998	0,331	0,006	0,011	0,011	568,299	0,009	0,004034483
Generator Sets	2035	251	500	Generator Sets_2035_500	9,666	0,11	0,978	0,328	0,005	0,011	0,011	568,299	0,009	0,004034483
Generator Sets	2035	501	750	Generator Sets_2035_750	15,606	0,11	0,978	0,328	0,005	0,011	0,011	568,299	0,009	0,004034483
Generator Sets	2035	1001	9999	Generator Sets_2035_9999	31,223	0,114	0,978	2,362	0,005	0,022	0,022	568,299	0,01	0,004482759
Generator Sets	2040	6	15	Generator Sets_2040_15	1,565	0,589	3,469	4,142	0,008	0,161	0,161	568,299	0,053	0,023758621
Generator Sets	2040	16	25	Generator Sets_2040_25	3,144	0,685	2,339	4,332	0,007	0,161	0,161	568,299	0,061	0,027344828
Generator Sets	2040	26	50	Generator Sets_2040_50	2,182	0,273	3,601	2,941	0,007	0,012	0,012	568,3	0,024	0,010758621
Generator Sets	2040	51	120	Generator Sets_2040_120	3,086	0,152	3,308	1,399	0,006	0,012	0,012	568,299	0,013	0,005827586
Generator Sets	2040	121	175	Generator Sets_2040_175	3,958	0,107	2,928	0,293	0,006	0,01	0,01	568,299	0,009	0,004034483
Generator Sets	2040	176	250	Generator Sets_2040_250	5,86	0,106	0,997	0,277	0,006	0,009	0,009	568,299	0,009	0,004034483
Generator Sets	2040	251	500	Generator Sets_2040_500	9,29	0,106	0,978	0,277	0,005	0,009	0,009	568,299	0,009	0,004034483
Generator Sets	2040	501	750	Generator Sets_2040_750	14,997	0,106	0,978	0,277	0,005	0,009	0,009	568,3	0,009	0,004034483
Generator Sets	2040	1001	9999	Generator Sets_2040_9999	29,36	0,107	0,978	2,33	0,005	0,02	0,02	568,299	0,009	0,004034483
Graders	1990	26	50	Graders_1990_50	10,997	4,776	9,678	7,935	0,871	1,265	1,265	568,3	0,431	0,193206897
Graders	1990	51	120	Graders_1990_120	14,614	2,332	5,658	14,78	0,791	1,325	1,325	568,299	0,21	0,094137931
Graders	1990	121	175	Graders_1990_175	17,684	1,707	5,007	13,838	0,758	0,946	0,946	568,299	0,154	0,069034483
Graders	1990	176	250	Graders_1990_250	24,561	1,707	5,007	13,838	0,758	0,946	0,946	568,299	0,154	0,069034483
Graders	1990	251	500	Graders_1990_500	29,01	1,512	10,95	13,128	0,662	0,811	0,811	568,299	0,136	0,060965517
Graders	1990	501	750	Graders_1990_750	61,406	1,512	10,95	13,128	1,018	0,826	0,826	568,3	0,136	0,060965517
Graders	2000	26	50	Graders_2000_50	10,331	4,487	9,239	7,082	0,066	0,935	0,935	568,299	0,404	0,181103448
Graders	2000	51	120	Graders_2000_120	11,628	1,855	4,675	10,486	0,06	0,904	0,904	568,3	0,167	0,074862069
Graders	2000	121	175	Graders_2000_175	13,017	1,256	3,786	9,601	0,057	0,531	0,531	568,299	0,113	0,050655172
Graders	2000	176	250	Graders_2000_250	15,266	1,061	3,039	9,264	0,057	0,437	0,437	568,299	0,095	0,042586207
Graders	2000	251	500	Graders_2000_500	18,455	0,961	4,848	8,805	0,05	0,384	0,384	568,3	0,086	0,038551724
Graders	2000	501	750	Graders_2000_750	39,064	0,961	4,848	8,805	0,052	0,384	0,384	568,299	0,086	0,038551724
Graders	2005	26	50	Graders_2005_50	9,193	3,993	8,559	6,612	0,066	0,868	0,868	568,299	0,36	0,16137931
Graders	2005	51	120	Graders_2005_120	10,174	1,623	4,406	9,021	0,06	0,849	0,849	568,3	0,146	0,065448276
Graders	2005	121	175	Graders_2005_175	11,01	1,062	3,522	8,238	0,057	0,469	0,469	568,299	0,095	0,042586207
Graders	2005	176	250	Graders_2005_250	11,283	0,784	2,17	7,837	0,057	0,314	0,314	568,299	0,07	0,03137931
Graders	2005	251	500	Graders_2005_500	13,286	0,692	2,913	7,117	0,05	0,279	0,279	568,299	0,062	0,027793103
Graders	2005	501	750	Graders_2005_750	28,569	0,703	2,909	7,284	0,052	0,282	0,282	568,299	0,063	0,028241379
Graders	2010	26	50	Graders_2010_50	3,618169	3,04	8,828	6,50487	0,005	0,852	0,783	547,2284	0,159	0,071275862
Graders	2010	51	120	Graders_2010_120	1,572744	1,322	4,95239	10,4805	0,005	0,854	0,786	523,7684	0,152	0,068137931
Graders	2010	121	175	Graders_2010_175	1,025452	0,862	3,90428	8,98998	0,005	0,496	0,456	536,7031	0,156	0,069931034
Graders	2010	176	250	Graders_2010_250	0,425787	0,358	1,43786	5,73143	0,005	0,182	0,167	530,3343	0,154	0,069034483
Graders	2010	251	500	Graders_2010_500	0,323814	0,272	1,81115	3,80781	0,005	0,142	0,13	525,6597	0,153	0,068586207
Graders	2010	501	750	Graders_2010_750	21,764	0,535	1,861	5,386	0,005	0,202	0,202	568,299	0,048	0,021517241
Graders	2011	26	50	Graders_2011_50	3,655035	3,071	8,9223	6,52829	0,005	0,86	0,791	545,8822	0,159	0,071275862
Graders	2011	51	120	Graders_2011_120	1,554125	1,306	4,9423	10,3495	0,005	0,847	0,78	522,5082	0,152	0,068137931
Graders	2011	121	175	Graders_2011_175	1,019798	0,857	3,91881	8,91245	0,005	0,494	0,455	535,2864	0,156	0,069931034
Graders	2011	176	250	Graders_2011_250	0,436805	0,367	1,44556	5,74733	0,005	0,183	0,169	529,0473	0,154	0,069034483
Graders	2011	251	500	Graders_2011_500	0,341103	0,287	1,83104	3,81827	0,005	0,144	0,132	524,3479	0,153	0,068586207
Graders	2011	501	750	Graders_2011_750	20,697	0,509	1,744	4,992	0,005	0,184	0,184	568,299	0,045	0,020172414
Graders	2012	26	50	Graders_2012_50	3,689945	3,101	9,01183	6,55055	0,005	0,867	0,798	544,5383	0,159	0,071275862
Graders	2012	51	120	Graders_2012_120	1,550155	1,303	4,94871	10,2881	0,005	0,848	0,78	521,1967	0,152	0,068137931
Graders	2012	121	175	Graders_2012_175	1,022941	0,86	3,94251	8,89699	0,005	0,496	0,456	533,878	0,156	0,069931034
Graders	2012	176	250	Graders_2012_250	0,449323	0,378	1,45898	5,777	0,005	0,185	0,171	527,8224	0,154	0,069034483
Graders	2012	251	500	Graders_2012_500	0,355329	0,299	1,82432	3,8123	0,005	0,145	0,133	522,8547	0,153	0,068586207
Graders	2012	501	750	Graders_2012_750	19,697	0,485	1,642	4,624	0,005	0,168	0,168	568,299	0,043	0,019275862
Graders	2013	26	50	Graders_2013_50	3,722893	3,128	9,0966	6,57166	0,005	0,874	0,804	541,8285	0,159	0,071275862
Graders	2013	51	120	Graders_2013_120	1,548648	1,301	4,95898	10,2424	0,005	0,849	0,781	518,5552	0,152	0,068137931
Graders	2013	121	175	Graders_2013_175	1,020021	0,857	3,95423	8,8338	0,005	0,495	0,455	530,9753	0,156	0,069931034
Graders	2013	176	250	Graders_2013_250	0,455824	0,383	1,45924	5,74577	0,005	0,185	0,17	525,0407	0,154	0,069034483
Graders	2013	251	500	Graders_2013_500	0,359627	0,302	1,7965	3,71231	0,005	0,141	0,13	520,0526	0,153	0,068586207
Graders	2013	501	750	Graders_2013_750	18,765	0,462	1,556	4,281	0,005	0,152	0,152	568,299	0,041	0,01837931
Graders	2014	26	50	Graders_2014_50	3,681797	3,094	9,06534	6,54967	0,005	0,867	0,798	539,1216	0,159	0,071275862
Graders	2014	51	120	Graders_2014_120	1,510465	1,269	4,91977	9,98567	0,005	0,832	0,765	515,3819	0,152	0,068137931
Graders	2014	121	175	Graders_2014_175	1,007876	0,847	3,95083	8,70206	0,005	0,488	0,449	527,8337	0,156	0,069931034
Graders	2014	176	250	Graders_2014_250	0,463867	0,39	1,46245	5,73998	0,005	0,185	0,171	522,3298	0,154	0,069034483

Graders	2014	251	500	Graders_2014_500	0,373775	0,314	1,79096	3,71371	0,005	0,143	0,131	517,3766	0,153	0,068586207
Graders	2014	501	750	Graders_2014_750	17,784	0,437	1,483	3,876	0,005	0,138	0,138	568,299	0,039	0,017482759
Graders	2015	26	50	Graders_2015_50	3,711306	3,119	9,14399	6,56967	0,005	0,874	0,804	533,6812	0,159	0,071275862
Graders	2015	51	120	Graders_2015_120	1,474627	1,239	4,88439	9,73775	0,005	0,813	0,748	509,597	0,152	0,068137931
Graders	2015	121	175	Graders_2015_175	1,004333	0,844	3,95849	8,63742	0,005	0,486	0,447	522,2182	0,156	0,069931034
Graders	2015	176	250	Graders_2015_250	0,471304	0,396	1,46577	5,72754	0,005	0,186	0,171	517,1275	0,154	0,069034483
Graders	2015	251	500	Graders_2015_500	0,388063	0,326	1,79107	3,72122	0,005	0,144	0,133	512,0975	0,153	0,068586207
Graders	2015	501	750	Graders_2015_750	16,846	0,414	1,42	3,501	0,005	0,124	0,124	568,299	0,037	0,016586207
Graders	2016	26	50	Graders_2016_50	3,670899	3,085	9,10623	6,51973	0,005	0,864	0,795	528,2444	0,159	0,071275862
Graders	2016	51	120	Graders_2016_120	1,419659	1,193	4,82948	9,41488	0,005	0,78	0,718	503,1614	0,152	0,068137931
Graders	2016	121	175	Graders_2016_175	0,963567	0,81	3,91624	8,24966	0,005	0,463	0,426	516,1305	0,156	0,069931034
Graders	2016	176	250	Graders_2016_250	0,473996	0,398	1,45911	5,6628	0,005	0,184	0,169	511,6959	0,154	0,069034483
Graders	2016	251	500	Graders_2016_500	0,397787	0,334	1,77374	3,6858	0,005	0,144	0,132	506,5064	0,153	0,068586207
Graders	2016	501	750	Graders_2016_750	15,959	0,393	1,367	3,154	0,005	0,112	0,112	568,299	0,035	0,015689655
Graders	2017	26	50	Graders_2017_50	3,5783	3,007	8,97826	6,423	0,005	0,843	0,776	520,0747	0,159	0,071275862
Graders	2017	51	120	Graders_2017_120	1,385767	1,164	4,81041	9,19125	0,005	0,759	0,698	495,9186	0,152	0,068137931
Graders	2017	121	175	Graders_2017_175	0,901	0,757	3,84518	7,66265	0,005	0,43	0,396	506,7478	0,155	0,069482759
Graders	2017	176	250	Graders_2017_250	0,471391	0,396	1,44905	5,52488	0,005	0,18	0,166	503,8022	0,154	0,069034483
Graders	2017	251	500	Graders_2017_500	0,397706	0,334	1,70747	3,55709	0,005	0,139	0,128	498,5996	0,153	0,068586207
Graders	2017	501	750	Graders_2017_750	15,127	0,372	1,323	2,835	0,005	0,1	0,1	568,299	0,033	0,014793103
Graders	2018	26	50	Graders_2018_50	3,342571	2,809	8,62631	6,17962	0,005	0,79	0,726	511,9098	0,159	0,071275862
Graders	2018	51	120	Graders_2018_120	1,27956	1,075	4,69711	8,51954	0,005	0,697	0,641	487,6979	0,152	0,068137931
Graders	2018	121	175	Graders_2018_175	0,78708	0,661	3,70957	6,60465	0,005	0,371	0,342	497,3767	0,155	0,069482759
Graders	2018	176	250	Graders_2018_250	0,457376	0,384	1,41595	5,27094	0,005	0,171	0,158	495,431	0,154	0,069034483
Graders	2018	251	500	Graders_2018_500	0,385909	0,324	1,56446	3,34465	0,005	0,129	0,119	490,5758	0,153	0,068586207
Graders	2018	501	750	Graders_2018_750	14,353	0,353	1,286	2,543	0,005	0,09	0,09	568,299	0,031	0,013896552
Graders	2019	26	50	Graders_2019_50	3,11378	2,616	8,27912	5,94463	0,005	0,737	0,678	503,7509	0,159	0,071275862
Graders	2019	51	120	Graders_2019_120	1,228249	1,032	4,6424	8,1592	0,005	0,665	0,612	479,9011	0,152	0,068137931
Graders	2019	121	175	Graders_2019_175	0,724541	0,609	3,65586	6,01354	0,005	0,337	0,31	489,0419	0,155	0,069482759
Graders	2019	176	250	Graders_2019_250	0,428358	0,36	1,35927	4,86575	0,005	0,156	0,144	486,3288	0,154	0,069034483
Graders	2019	251	500	Graders_2019_500	0,384059	0,323	1,52849	3,21794	0,005	0,124	0,114	482,5879	0,153	0,068586207
Graders	2019	501	750	Graders_2019_750	13,635	0,335	1,255	2,276	0,005	0,08	0,08	568,299	0,03	0,013448276
Graders	2020	26	50	Graders_2020_50	2,994737	2,516	8,13394	5,82549	0,005	0,709	0,652	492,8615	0,159	0,071275862
Graders	2020	51	120	Graders_2020_120	1,161574	0,976	4,56142	7,72513	0,005	0,622	0,572	469,3371	0,152	0,068137931
Graders	2020	121	175	Graders_2020_175	0,674427	0,567	3,62102	5,53045	0,005	0,309	0,284	478,0403	0,155	0,069482759
Graders	2020	176	250	Graders_2020_250	0,41877	0,352	1,34183	4,67787	0,005	0,15	0,138	475,3037	0,154	0,069034483
Graders	2020	251	500	Graders_2020_500	0,383198	0,322	1,5256	3,10731	0,005	0,121	0,111	471,9795	0,153	0,068586207
Graders	2020	501	750	Graders_2020_750	12,961	0,319	1,229	2,031	0,005	0,072	0,072	568,299	0,028	0,012551724
Graders	2021	26	50	Graders_2021_50	2,660206	2,235	7,62621	5,48468	0,005	0,631	0,581	492,9352	0,159	0,071275862
Graders	2021	51	120	Graders_2021_120	1,072144	0,901	4,45175	7,12535	0,005	0,57	0,524	469,0701	0,152	0,068137931
Graders	2021	121	175	Graders_2021_175	0,601372	0,505	3,55896	4,83947	0,005	0,27	0,248	478,5289	0,155	0,069482759
Graders	2021	176	250	Graders_2021_250	0,398657	0,335	1,30687	4,38134	0,005	0,139	0,128	474,5386	0,153	0,068586207
Graders	2021	251	500	Graders_2021_500	0,383194	0,322	1,46044	3,01257	0,005	0,117	0,108	471,8981	0,153	0,068586207
Graders	2021	501	750	Graders_2021_750	12,333	0,303	1,207	1,808	0,005	0,064	0,064	568,299	0,027	0,012103448
Graders	2022	26	50	Graders_2022_50	2,506375	2,106	7,42848	5,33188	0,005	0,595	0,547	493,0249	0,159	0,071275862
Graders	2022	51	120	Graders_2022_120	0,947815	0,796	4,32966	6,36004	0,005	0,493	0,453	469,6301	0,152	0,068137931
Graders	2022	121	175	Graders_2022_175	0,524016	0,44	3,49283	4,12488	0,005	0,229	0,211	478,5664	0,155	0,069482759
Graders	2022	176	250	Graders_2022_250	0,365229	0,307	1,27327	3,8881	0,005	0,124	0,114	474,239	0,153	0,068586207
Graders	2022	251	500	Graders_2022_500	0,370143	0,311	1,38967	2,80191	0,005	0,108	0,1	471,9278	0,153	0,068586207
Graders	2022	501	750	Graders_2022_750	11,747	0,289	1,187	1,606	0,005	0,057	0,057	568,299	0,026	0,011655172
Graders	2023	26	50	Graders_2023_50	2,316861	1,947	7,19094	5,14799	0,005	0,549	0,505	494,0202	0,16	0,071724138
Graders	2023	51	120	Graders_2023_120	0,855685	0,719	4,22811	5,74006	0,005	0,436	0,401	469,2859	0,152	0,068137931
Graders	2023	121	175	Graders_2023_175	0,463941	0,39	3,45006	3,54785	0,005	0,195	0,18	478,4629	0,155	0,069482759
Graders	2023	176	250	Graders_2023_250	0,337478	0,284	1,25173	3,44101	0,005	0,111	0,103	473,9256	0,153	0,068586207
Graders	2023	251	500	Graders_2023_500	0,367269	0,309	1,38481	2,70451	0,005	0,105	0,097	471,0306	0,152	0,068137931
Graders	2023	501	750	Graders_2023_750	11,215	0,276	1,17	1,425	0,005	0,051	0,051	568,3	0,024	0,010758621
Graders	2024	26	50	Graders_2024_50	2,201935	1,85	7,05059	5,0278	0,005	0,52	0,479	493,7913	0,16	0,071724138
Graders	2024	51	120	Graders_2024_120	0,812369	0,683	4,20033	5,43389	0,005	0,408	0,375	469,8208	0,152	0,068137931
Graders	2024	121	175	Graders_2024_175	0,433005	0,364	3,43239	3,20219	0,005	0,177	0,163	478,4966	0,155	0,069482759
Graders	2024	176	250	Graders_2024_250	0,312074	0,262	1,22497	3,07323	0,005	0,1	0,092	473,6685	0,153	0,068586207
Graders	2024	251	500	Graders_2024_500	0,348233	0,293	1,35613	2,43171	0,005	0,095	0,088	470,2664	0,152	0,068137931
Graders	2024	501	750	Graders_2024_750	10,734	0,264	1,155	1,265	0,005	0,046	0,046	568,3	0,023	0,010310345
Graders	2025	26	50	Graders_2025_50	2,21878	1,864	7,12535	5,04301	0,005	0,522	0,48	493,5322	0,16	0,071724138
Graders	2025	51	120	Graders_2025_120	0,759044	0,638	4,14911	5,07379	0,005	0,371	0,342	468,3155	0,151	0,067689655
Graders	2025	121	175	Graders_2025_175	0,391287	0,329	3,41759	2,77396	0,005	0,152	0,14	478,5084	0,155	0,069482759
Graders	2025	176	250	Graders_2025_250	0,273788	0,23	1,17888	2,55629	0,005	0,082	0,076	473,4704	0,153	0,068586207
Graders	2025	251	500	Graders_2025_500	0,332717	0,28	1,31461	2,26485	0,005	0,088	0,081	470,7533	0,152	0,068137931
Graders	2025	501	750	Graders_2025_750	10,301	0,253	1,141	1,125	0,005	0,041	0,041	568,3	0,022	0,009862069
Graders	2030	26	50	Graders_2030_50	1,493	0,648	5,239	3,53	0,007	0,065	0,065	568,299	0,058	0,026
Graders	2030	51	120	Graders_2030_120	2,028	0,323	3,775	1,903	0,006	0,058	0,058	568,299	0,029	0,013
Graders	2030	121	175	Graders_2030_175	2,458	0,237	3,326	0,815	0,006	0,038	0,038	568,3	0,021	0,009413793
Graders	2030	176	250	Graders_2030_250	3,114	0,216	1,148	0,684	0,006	0,024	0,024	568,299	0,019	0,008517241
Graders	2030	251	500	Graders_2030_500	4,115	0,214	1,097	0,647	0,005	0,023	0,023	568,299	0,019	0,008517241

Graders	2030	501	750	Graders_2030_750	8,717	0,214	1,097	0,654	0,005	0,023	0,023	568,299	0,019	0,008517241
Graders	2035	26	50	Graders_2035_50	1,367	0,593	5,189	3,356	0,007	0,037	0,037	568,299	0,053	0,023758621
Graders	2035	51	120	Graders_2035_120	1,837	0,293	3,767	1,661	0,006	0,034	0,034	568,299	0,026	0,011655172
Graders	2035	121	175	Graders_2035_175	2,136	0,206	3,326	0,506	0,006	0,022	0,022	568,3	0,018	0,008068966
Graders	2035	176	250	Graders_2035_250	2,822	0,196	1,137	0,452	0,006	0,016	0,016	568,299	0,017	0,00762069
Graders	2035	251	500	Graders_2035_500	3,746	0,195	1,083	0,434	0,005	0,016	0,016	568,299	0,017	0,00762069
Graders	2035	501	750	Graders_2035_750	7,933	0,195	1,083	0,438	0,005	0,016	0,016	568,299	0,017	0,00762069
Graders	2040	26	50	Graders_2040_50	1,297	0,563	5,161	3,298	0,007	0,026	0,026	568,3	0,05	0,022413793
Graders	2040	51	120	Graders_2040_120	1,747	0,278	3,764	1,56	0,006	0,024	0,024	568,299	0,025	0,011206897
Graders	2040	121	175	Graders_2040_175	2,002	0,193	3,326	0,38	0,006	0,017	0,017	568,299	0,017	0,00762069
Graders	2040	176	250	Graders_2040_250	2,719	0,188	1,133	0,36	0,006	0,013	0,013	568,299	0,017	0,00762069
Graders	2040	251	500	Graders_2040_500	3,619	0,188	1,079	0,351	0,005	0,013	0,013	568,299	0,017	0,00762069
Graders	2040	501	750	Graders_2040_750	7,663	0,188	1,079	0,353	0,005	0,013	0,013	568,299	0,017	0,00762069
Off-Highway Tractors	1990	51	120	Off-Highway Tractors_1990_120	7,901	2,432	5,842	15,285	0,791	1,384	1,384	568,299	0,219	0,098172414
Off-Highway Tractors	1990	121	175	Off-Highway Tractors_1990_175	8,363	1,85	5,217	14,647	0,758	1,033	1,033	568,299	0,166	0,074413793
Off-Highway Tractors	1990	176	250	Off-Highway Tractors_1990_250	8,363	1,85	5,217	14,647	0,758	1,033	1,033	568,299	0,166	0,074413793
Off-Highway Tractors	1990	501	750	Off-Highway Tractors_1990_750	32,077	1,629	11,847	13,849	1,018	0,896	0,896	568,3	0,147	0,065896552
Off-Highway Tractors	1990	751	1000	Off-Highway Tractors_1990_1000	45,779	1,622	11,847	13,849	1,018	0,888	0,888	568,3	0,146	0,065448276
Off-Highway Tractors	2000	51	120	Off-Highway Tractors_2000_120	6,648	2,047	5,046	11,606	0,06	0,972	0,972	568,299	0,184	0,082482759
Off-Highway Tractors	2000	121	175	Off-Highway Tractors_2000_175	6,386	1,413	4,213	10,675	0,057	0,602	0,602	568,299	0,127	0,056931034
Off-Highway Tractors	2000	176	250	Off-Highway Tractors_2000_250	5,736	1,269	3,665	10,426	0,057	0,532	0,532	568,299	0,114	0,051103448
Off-Highway Tractors	2000	501	750	Off-Highway Tractors_2000_750	22,339	1,134	6,836	9,864	0,052	0,461	0,461	568,299	0,102	0,045724138
Off-Highway Tractors	2000	751	1000	Off-Highway Tractors_2000_1000	33,036	1,17	7,259	10,29	0,052	0,444	0,444	568,299	0,105	0,047068966
Off-Highway Tractors	2005	51	120	Off-Highway Tractors_2005_120	6,042	1,86	4,801	10,379	0,06	0,932	0,932	568,299	0,167	0,074862069
Off-Highway Tractors	2005	121	175	Off-Highway Tractors_2005_175	5,63	1,246	3,943	9,479	0,057	0,547	0,547	568,299	0,112	0,050206897
Off-Highway Tractors	2005	176	250	Off-Highway Tractors_2005_250	4,641	1,027	2,923	9,16	0,057	0,425	0,425	568,299	0,092	0,041241379
Off-Highway Tractors	2005	501	750	Off-Highway Tractors_2005_750	17,978	0,913	4,992	8,543	0,052	0,372	0,372	568,299	0,082	0,036758621
Off-Highway Tractors	2005	751	1000	Off-Highway Tractors_2005_1000	27,525	0,975	5,369	9,293	0,052	0,359	0,359	568,299	0,088	0,039448276
Off-Highway Tractors	2010	51	120	Off-Highway Tractors_2010_120	1,004164	0,844	4,06859	7,39576	0,005	0,61	0,561	529,8898	0,154	0,069034483
Off-Highway Tractors	2010	121	175	Off-Highway Tractors_2010_175	0,623556	0,524	3,25207	6,19445	0,005	0,322	0,297	526,0485	0,153	0,068586207
Off-Highway Tractors	2010	176	250	Off-Highway Tractors_2010_250	0,540439	0,454	1,80076	6,56823	0,005	0,241	0,222	522,8212	0,152	0,068137931
Off-Highway Tractors	2010	501	750	Off-Highway Tractors_2010_750	0,353776	0,297	1,65183	4,74911	0,005	0,163	0,15	526,6401	0,153	0,068586207
Off-Highway Tractors	2010	751	1000	Off-Highway Tractors_2010_1000	1,235451	1,038	13,844	12,2723	0,005	0,624	0,574	524,505	0,153	0,068586207
Off-Highway Tractors	2011	51	120	Off-Highway Tractors_2011_120	0,958318	0,805	4,04749	7,12201	0,005	0,588	0,541	528,6123	0,154	0,069034483
Off-Highway Tractors	2011	121	175	Off-Highway Tractors_2011_175	0,588696	0,495	3,25718	5,88095	0,005	0,307	0,282	524,5528	0,153	0,068586207
Off-Highway Tractors	2011	176	250	Off-Highway Tractors_2011_250	0,522937	0,439	1,73271	6,3706	0,005	0,23	0,212	521,5328	0,152	0,068137931
Off-Highway Tractors	2011	501	750	Off-Highway Tractors_2011_750	0,366196	0,308	1,66137	4,77936	0,005	0,166	0,153	525,3172	0,153	0,068586207
Off-Highway Tractors	2011	751	1000	Off-Highway Tractors_2011_1000	1,235451	1,038	13,844	12,2723	0,005	0,624	0,574	523,1938	0,153	0,068586207
Off-Highway Tractors	2012	51	120	Off-Highway Tractors_2012_120	0,956826	0,804	4,07302	7,07175	0,005	0,588	0,541	527,1281	0,154	0,069034483
Off-Highway Tractors	2012	121	175	Off-Highway Tractors_2012_175	0,573556	0,482	3,27598	5,70904	0,005	0,299	0,276	523,1986	0,153	0,068586207
Off-Highway Tractors	2012	176	250	Off-Highway Tractors_2012_250	0,51645	0,434	1,70131	6,26836	0,005	0,225	0,207	520,2636	0,152	0,068137931
Off-Highway Tractors	2012	501	750	Off-Highway Tractors_2012_750	0,3785	0,318	1,67078	4,80904	0,005	0,169	0,155	523,9941	0,153	0,068586207
Off-Highway Tractors	2012	751	1000	Off-Highway Tractors_2012_1000	1,235451	1,038	13,844	12,2723	0,005	0,624	0,574	521,8825	0,153	0,068586207
Off-Highway Tractors	2013	51	120	Off-Highway Tractors_2013_120	0,915141	0,769	4,04714	6,79599	0,005	0,564	0,519	524,1555	0,154	0,069034483
Off-Highway Tractors	2013	121	175	Off-Highway Tractors_2013_175	0,54434	0,457	3,28016	5,42114	0,005	0,281	0,258	520,6151	0,153	0,068586207
Off-Highway Tractors	2013	176	250	Off-Highway Tractors_2013_250	0,508791	0,428	1,67153	6,11434	0,005	0,219	0,201	517,5627	0,152	0,068137931
Off-Highway Tractors	2013	501	750	Off-Highway Tractors_2013_750	0,342496	0,288	1,42496	4,32547	0,005	0,149	0,137	519,6246	0,153	0,068586207
Off-Highway Tractors	2013	751	1000	Off-Highway Tractors_2013_1000	1,235451	1,038	13,844	12,2723	0,005	0,624	0,574	519,26	0,153	0,068586207
Off-Highway Tractors	2014	51	120	Off-Highway Tractors_2014_120	0,830806	0,698	3,97241	6,28073	0,005	0,513	0,472	520,8244	0,154	0,069034483
Off-Highway Tractors	2014	121	175	Off-Highway Tractors_2014_175	0,504784	0,424	3,26511	5,02525	0,005	0,258	0,237	518,1639	0,153	0,068586207
Off-Highway Tractors	2014	176	250	Off-Highway Tractors_2014_250	0,481559	0,405	1,62822	5,66092	0,005	0,203	0,187	514,3699	0,152	0,068137931
Off-Highway Tractors	2014	501	750	Off-Highway Tractors_2014_750	0,317193	0,267	1,33448	4,00651	0,005	0,133	0,122	516,904	0,153	0,068586207
Off-Highway Tractors	2014	751	1000	Off-Highway Tractors_2014_1000	0,100665	0,085	0,94694	2,27938	0,005	0,054	0,05	516,6375	0,153	0,068586207
Off-Highway Tractors	2015	51	120	Off-Highway Tractors_2015_120	0,802587	0,674	3,96474	6,06726	0,005	0,494	0,455	515,3203	0,154	0,069034483
Off-Highway Tractors	2015	121	175	Off-Highway Tractors_2015_175	0,478075	0,402	3,26419	4,72365	0,005	0,239	0,22	512,6079	0,153	0,068586207
Off-Highway Tractors	2015	176	250	Off-Highway Tractors_2015_250	0,476529	0,4	1,60534	5,52773	0,005	0,199	0,183	509,1896	0,152	0,068137931
Off-Highway Tractors	2015	501	750	Off-Highway Tractors_2015_750	0,312134	0,262	1,17195	3,87437	0,005	0,126	0,116	511,0814	0,153	0,068586207
Off-Highway Tractors	2015	751	1000	Off-Highway Tractors_2015_1000	0,114305	0,096	0,96003	2,29983	0,005	0,056	0,051	511,3924	0,153	0,068586207
Off-Highway Tractors	2016	51	120	Off-Highway Tractors_2016_120	0,743357	0,625	3,92464	5,6465	0,005	0,454	0,418	509,4472	0,154	0,069034483
Off-Highway Tractors	2016	121	175	Off-Highway Tractors_2016_175	0,465284	0,391	3,27806	4,51093	0,005	0,229	0,211	507,6294	0,153	0,068586207
Off-Highway Tractors	2016	176	250	Off-Highway Tractors_2016_250	0,426838	0,359	1,47177	4,92994	0,005	0,171	0,157	504,1229	0,152	0,068137931
Off-Highway Tractors	2016	501	750	Off-Highway Tractors_2016_750	0,299821	0,252	1,14348	3,57265	0,005	0,117	0,108	505,762	0,153	0,068586207
Off-Highway Tractors	2016	751	1000	Off-Highway Tractors_2016_1000	0,127675	0,107	0,97285	2,31987	0,005	0,057	0,053	506,1474	0,153	0,068586207
Off-Highway Tractors	2017	51	120	Off-Highway Tractors_2017_120	0,697857	0,586	3,90108	5,31726	0,005	0,423	0,389	501,2453	0,154	0,069034483
Off-Highway Tractors	2017	121	175	Off-Highway Tractors_2017_175	0,423504	0,356	3,2589	4,02594	0,005	0,205	0,189	499,2446	0,153	0,068586207
Off-Highway Tractors	2017	176	250	Off-Highway Tractors_2017_250	0,389773	0,328	1,403	4,38216	0,005	0,151	0,139	496,4983	0,152	0,068137931
Off-Highway Tractors	2017	501	750	Off-Highway Tractors_2017_750	0,294592	0,248	1,14456	3,32351	0,005	0,112	0,103	497,6181	0,152	0,068137931
Off-Highway Tractors	2017	751	1000	Off-Highway Tractors_2017_1000	0,140776	0,118	0,98542	2,33951	0,005	0,059	0,054	498,2798	0,153	0,068586207
Off-Highway Tractors	2018	51	120	Off-Highway Tractors_2018_120	0,621057	0,522	3,83227	4,78732	0,005	0,373	0,343	492,8709	0,153	0,068586207
Off-Highway Tractors	2018	121	175	Off-Highway Tractors_2018_175	0,374746	0,315	3,2191	3,49764	0,005	0,176	0,162	491,3128	0,153	0,068586207
Off-Highway Tractors	2018	176	250	Off-Highway Tractors_2018_250	0,323278	0,272	1,29494	3,45421	0,005	0,119	0,109	488,6765	0,152	0,068137931
Off-Highway Tractors	2018	501	750	Off-Highway Tractors_2018_750	0,232675	0,196	1,11871	2,1656	0,005	0,081	0,074	490,1818	0,153	0,068586207
Off-Highway Tractors	2018	751	1000	Off-Highway Tractors_2018_1000	0,153606	0,129	0,99773	2,35874	0,005	0,06	0,055	490,4122	0,153	0,068586207

Off-Highway Tractors	2019	51	120	Off-Highway Tractors_2019_120	0,562974	0,473	3,79465	4,42145	0,005	0,331	0,305	484,2693	0,153	0,068586207
Off-Highway Tractors	2019	121	175	Off-Highway Tractors_2019_175	0,350048	0,294	3,21895	3,20755	0,005	0,159	0,146	483,4306	0,153	0,068586207
Off-Highway Tractors	2019	176	250	Off-Highway Tractors_2019_250	0,283777	0,238	1,21832	2,9142	0,005	0,098	0,09	481,2751	0,152	0,068137931
Off-Highway Tractors	2019	501	750	Off-Highway Tractors_2019_750	0,244248	0,205	1,12934	2,17682	0,005	0,082	0,075	482,3091	0,153	0,068586207
Off-Highway Tractors	2019	751	1000	Off-Highway Tractors_2019_1000	0,166166	0,14	1,00978	2,37757	0,005	0,062	0,057	482,5446	0,153	0,068586207
Off-Highway Tractors	2020	51	120	Off-Highway Tractors_2020_120	0,533073	0,448	3,78798	4,18317	0,005	0,307	0,282	474,1481	0,153	0,068586207
Off-Highway Tractors	2020	121	175	Off-Highway Tractors_2020_175	0,322507	0,271	3,21511	2,89032	0,005	0,14	0,129	472,9169	0,153	0,068586207
Off-Highway Tractors	2020	176	250	Off-Highway Tractors_2020_250	0,263453	0,221	1,1813	2,57547	0,005	0,086	0,079	470,943	0,152	0,068137931
Off-Highway Tractors	2020	501	750	Off-Highway Tractors_2020_750	0,239679	0,201	1,13143	2,04663	0,005	0,076	0,07	471,8151	0,153	0,068586207
Off-Highway Tractors	2020	751	1000	Off-Highway Tractors_2020_1000	0,178457	0,15	1,02156	2,39599	0,005	0,063	0,058	472,0545	0,153	0,068586207
Off-Highway Tractors	2021	51	120	Off-Highway Tractors_2021_120	0,469894	0,395	3,74258	3,77306	0,005	0,261	0,24	474,5155	0,153	0,068586207
Off-Highway Tractors	2021	121	175	Off-Highway Tractors_2021_175	0,307902	0,259	3,21953	2,65962	0,005	0,129	0,118	472,9236	0,153	0,068586207
Off-Highway Tractors	2021	176	250	Off-Highway Tractors_2021_250	0,237665	0,2	1,16179	2,11341	0,005	0,072	0,067	471,0028	0,152	0,068137931
Off-Highway Tractors	2021	501	750	Off-Highway Tractors_2021_750	0,215694	0,181	1,12237	1,71505	0,005	0,063	0,058	471,8056	0,153	0,068586207
Off-Highway Tractors	2021	751	1000	Off-Highway Tractors_2021_1000	0,190478	0,16	1,0331	2,41401	0,005	0,064	0,059	472,0545	0,153	0,068586207
Off-Highway Tractors	2022	51	120	Off-Highway Tractors_2022_120	0,414344	0,348	3,70994	3,39986	0,005	0,219	0,202	475,2338	0,154	0,069034483
Off-Highway Tractors	2022	121	175	Off-Highway Tractors_2022_175	0,275155	0,231	3,18586	2,23877	0,005	0,107	0,099	472,8111	0,153	0,068586207
Off-Highway Tractors	2022	176	250	Off-Highway Tractors_2022_250	0,213642	0,18	1,14284	1,73242	0,005	0,06	0,055	471,1313	0,152	0,068137931
Off-Highway Tractors	2022	501	750	Off-Highway Tractors_2022_750	0,20345	0,171	1,12111	1,43309	0,005	0,055	0,05	471,939	0,153	0,068586207
Off-Highway Tractors	2022	751	1000	Off-Highway Tractors_2022_1000	0,202228	0,17	1,04437	2,43162	0,005	0,066	0,06	472,0545	0,153	0,068586207
Off-Highway Tractors	2023	51	120	Off-Highway Tractors_2023_120	0,37642	0,316	3,68654	3,09527	0,005	0,187	0,172	476,0871	0,154	0,069034483
Off-Highway Tractors	2023	121	175	Off-Highway Tractors_2023_175	0,239199	0,201	3,14329	1,78476	0,005	0,085	0,079	472,9962	0,153	0,068586207
Off-Highway Tractors	2023	176	250	Off-Highway Tractors_2023_250	0,20356	0,171	1,13796	1,49148	0,005	0,053	0,049	470,845	0,152	0,068137931
Off-Highway Tractors	2023	501	750	Off-Highway Tractors_2023_750	0,199838	0,168	1,12418	1,28868	0,005	0,051	0,047	471,9321	0,153	0,068586207
Off-Highway Tractors	2023	751	1000	Off-Highway Tractors_2023_1000	0,213709	0,18	1,05538	2,44883	0,005	0,067	0,062	472,0545	0,153	0,068586207
Off-Highway Tractors	2024	51	120	Off-Highway Tractors_2024_120	0,359218	0,302	3,69095	2,94932	0,005	0,171	0,157	476,3711	0,154	0,069034483
Off-Highway Tractors	2024	121	175	Off-Highway Tractors_2024_175	0,21727	0,183	3,1328	1,49579	0,005	0,071	0,066	473,097	0,153	0,068586207
Off-Highway Tractors	2024	176	250	Off-Highway Tractors_2024_250	0,200963	0,169	1,13461	1,37732	0,005	0,049	0,045	470,6894	0,152	0,068137931
Off-Highway Tractors	2024	501	750	Off-Highway Tractors_2024_750	0,200706	0,169	1,13006	1,23477	0,005	0,048	0,044	471,9247	0,153	0,068586207
Off-Highway Tractors	2024	751	1000	Off-Highway Tractors_2024_1000	0,22492	0,189	1,06613	2,46563	0,005	0,068	0,063	472,0545	0,153	0,068586207
Off-Highway Tractors	2025	51	120	Off-Highway Tractors_2025_120	0,32831	0,276	3,66914	2,70745	0,005	0,144	0,132	476,9211	0,154	0,069034483
Off-Highway Tractors	2025	121	175	Off-Highway Tractors_2025_175	0,208537	0,175	3,14246	1,34858	0,005	0,065	0,059	473,3021	0,153	0,068586207
Off-Highway Tractors	2025	176	250	Off-Highway Tractors_2025_250	0,183862	0,154	1,13017	1,11624	0,005	0,04	0,037	470,861	0,152	0,068137931
Off-Highway Tractors	2025	501	750	Off-Highway Tractors_2025_750	0,199094	0,167	1,13452	1,11804	0,005	0,045	0,041	471,9169	0,153	0,068586207
Off-Highway Tractors	2025	751	1000	Off-Highway Tractors_2025_1000	0,235862	0,198	1,07663	2,48203	0,005	0,069	0,064	472,0545	0,153	0,068586207
Off-Highway Tractors	2030	51	120	Off-Highway Tractors_2030_120	1,683	0,518	3,944	2,959	0,006	0,175	0,175	568,299	0,046	0,02062069
Off-Highway Tractors	2030	121	175	Off-Highway Tractors_2030_175	1,689	0,373	3,435	1,916	0,006	0,104	0,104	568,299	0,033	0,014793103
Off-Highway Tractors	2030	176	250	Off-Highway Tractors_2030_250	1,423	0,315	1,286	1,715	0,006	0,064	0,064	568,299	0,028	0,012551724
Off-Highway Tractors	2030	501	750	Off-Highway Tractors_2030_750	5,992	0,304	1,351	1,59	0,005	0,06	0,06	568,299	0,027	0,012103448
Off-Highway Tractors	2030	751	1000	Off-Highway Tractors_2030_1000	8,981	0,318	1,409	3,569	0,005	0,078	0,078	568,3	0,028	0,012551724
Off-Highway Tractors	2035	51	120	Off-Highway Tractors_2035_120	1,359	0,418	3,902	2,35	0,006	0,107	0,107	568,299	0,037	0,016586207
Off-Highway Tractors	2035	121	175	Off-Highway Tractors_2035_175	1,361	0,301	3,421	1,252	0,006	0,065	0,065	568,299	0,027	0,012103448
Off-Highway Tractors	2035	176	250	Off-Highway Tractors_2035_250	1,211	0,268	1,232	1,115	0,006	0,042	0,042	568,299	0,024	0,010758621
Off-Highway Tractors	2035	501	750	Off-Highway Tractors_2035_750	5,163	0,262	1,238	1,045	0,005	0,04	0,04	568,299	0,023	0,010310345
Off-Highway Tractors	2035	751	1000	Off-Highway Tractors_2035_1000	7,617	0,269	1,268	3,116	0,005	0,056	0,056	568,299	0,024	0,010758621
Off-Highway Tractors	2040	51	120	Off-Highway Tractors_2040_120	1,176	0,362	3,878	1,976	0,006	0,067	0,067	568,299	0,032	0,014344828
Off-Highway Tractors	2040	121	175	Off-Highway Tractors_2040_175	1,162	0,257	3,412	0,836	0,006	0,041	0,041	568,299	0,023	0,010310345
Off-Highway Tractors	2040	176	250	Off-Highway Tractors_2040_250	1,073	0,237	1,198	0,747	0,006	0,028	0,028	568,299	0,021	0,009413793
Off-Highway Tractors	2040	501	750	Off-Highway Tractors_2040_750	4,612	0,234	1,164	0,71	0,005	0,027	0,027	568,299	0,021	0,009413793
Off-Highway Tractors	2040	751	1000	Off-Highway Tractors_2040_1000	6,743	0,238	1,183	2,844	0,005	0,042	0,042	568,299	0,021	0,009413793
Off-Highway Trucks	1990	121	175	Off-Highway Trucks_1990_175	6,457	2,005	5,36	15,394	0,758	1,133	1,133	568,299	0,18	0,080689655
Off-Highway Trucks	1990	176	250	Off-Highway Trucks_1990_250	8,597	2,005	5,36	15,394	0,758	1,133	1,133	568,299	0,18	0,080689655
Off-Highway Trucks	1990	251	500	Off-Highway Trucks_1990_500	12,319	1,757	12,538	14,499	0,662	0,959	0,959	568,299	0,158	0,070827586
Off-Highway Trucks	1990	501	750	Off-Highway Trucks_1990_750	19,982	1,757	12,538	14,499	1,018	0,976	0,976	568,299	0,158	0,070827586
Off-Highway Trucks	1990	751	1000	Off-Highway Trucks_1990_1000	28,084	1,746	12,538	14,499	1,018	0,963	0,963	568,3	0,157	0,07037931
Off-Highway Trucks	2000	121	175	Off-Highway Trucks_2000_175	4,115	1,278	3,772	9,57	0,057	0,548	0,548	568,299	0,115	0,051551724
Off-Highway Trucks	2000	176	250	Off-Highway Trucks_2000_250	4,454	1,039	2,896	9,178	0,057	0,425	0,425	568,299	0,093	0,041689655
Off-Highway Trucks	2000	251	500	Off-Highway Trucks_2000_500	6,594	0,94	4,214	8,675	0,05	0,376	0,376	568,299	0,084	0,037655172
Off-Highway Trucks	2000	501	750	Off-Highway Trucks_2000_750	10,696	0,94	4,214	8,675	0,052	0,376	0,376	568,299	0,084	0,037655172
Off-Highway Trucks	2000	751	1000	Off-Highway Trucks_2000_1000	16,13	1,003	4,878	9,339	0,052	0,355	0,355	568,3	0,09	0,040344828
Off-Highway Trucks	2005	121	175	Off-Highway Trucks_2005_175	3,462	1,075	3,531	8,1	0,057	0,481	0,481	568,299	0,097	0,043482759
Off-Highway Trucks	2005	176	250	Off-Highway Trucks_2005_250	3,21	0,748	1,978	7,652	0,057	0,291	0,291	568,299	0,067	0,030034483
Off-Highway Trucks	2005	251	500	Off-Highway Trucks_2005_500	4,695	0,669	2,332	6,848	0,05	0,26	0,26	568,299	0,06	0,026896552
Off-Highway Trucks	2005	501	750	Off-Highway Trucks_2005_750	7,697	0,677	2,33	7,052	0,052	0,264	0,264	568,299	0,061	0,027344828
Off-Highway Trucks	2005	751	1000	Off-Highway Trucks_2005_1000	12,436	0,773	2,812	8,177	0,052	0,266	0,266	568,299	0,069	0,030931034
Off-Highway Trucks	2010	121	175	Off-Highway Trucks_2010_175	0,758703	0,638	3,51002	6,59182	0,005	0,39	0,359	522,6455	0,152	0,068137931
Off-Highway Trucks	2010	176	250	Off-Highway Trucks_2010_250	0,657432	0,552	2,13151	6,86617	0,005	0,29	0,267	521,8781	0,152	0,068137931
Off-Highway Trucks	2010	251	500	Off-Highway Trucks_2010_500	0,5118	0,43	2,32222	5,52051	0,005	0,213	0,196	528,8078	0,154	0,069034483
Off-Highway Trucks	2010	501	750	Off-Highway Trucks_2010_750	0,633984	0,533	3,68555	6,54487	0,005	0,276	0,254	530,4366	0,154	0,069034483
Off-Highway Trucks	2010	751	1000	Off-Highway Trucks_2010_1000	0,549873	0,462	2,05613	7,15365	0,005	0,211	0,194	526,5915	0,153	0,068586207
Off-Highway Trucks	2011	121	175	Off-Highway Trucks_2011_175	0,704506	0,592	3,48667	6,13879	0,005	0,357	0,328	521,3222	0,152	0,068137931
Off-Highway Trucks	2011	176	250	Off-Highway Trucks_2011_250	0,640546	0,538	2,08881	6,53722	0,005	0,278	0,256	520,1539	0,152	0,068137931
Off-Highway Trucks	2011	251	500	Off-Highway Trucks_2011_500	0,515485	0,433	2,27798	5,39802	0,005	0,21	0,193	527,2602	0,154	0,069034483

Off-Highway Trucks	2011	501	750	Off-Highway Trucks_2011_750	0,643792	0,541	3,68121	6,51376	0,005	0,276	0,254	529,0143	0,154	0,069034483
Off-Highway Trucks	2011	751	1000	Off-Highway Trucks_2011_1000	0,55014	0,462	2,03783	7,09609	0,005	0,211	0,194	524,7459	0,153	0,068586207
Off-Highway Trucks	2012	121	175	Off-Highway Trucks_2012_175	0,704248	0,592	3,51164	6,0668	0,005	0,354	0,325	519,901	0,152	0,068137931
Off-Highway Trucks	2012	176	250	Off-Highway Trucks_2012_250	0,646155	0,543	2,1013	6,43814	0,005	0,277	0,255	518,7133	0,152	0,068137931
Off-Highway Trucks	2012	251	500	Off-Highway Trucks_2012_500	0,525914	0,442	2,29017	5,37678	0,005	0,21	0,193	525,9398	0,154	0,069034483
Off-Highway Trucks	2012	501	750	Off-Highway Trucks_2012_750	0,661317	0,556	3,73128	6,55684	0,005	0,28	0,258	527,6141	0,154	0,069034483
Off-Highway Trucks	2012	751	1000	Off-Highway Trucks_2012_1000	0,55909	0,47	2,05327	7,10377	0,005	0,213	0,196	523,3305	0,153	0,068586207
Off-Highway Trucks	2013	121	175	Off-Highway Trucks_2013_175	0,671819	0,565	3,51059	5,78297	0,005	0,33	0,304	517,0124	0,152	0,068137931
Off-Highway Trucks	2013	176	250	Off-Highway Trucks_2013_250	0,623589	0,524	2,04802	6,05816	0,005	0,263	0,242	515,8273	0,152	0,068137931
Off-Highway Trucks	2013	251	500	Off-Highway Trucks_2013_500	0,502477	0,422	2,17762	5,06239	0,005	0,197	0,181	523,5459	0,154	0,069034483
Off-Highway Trucks	2013	501	750	Off-Highway Trucks_2013_750	0,645495	0,542	3,55888	6,30864	0,005	0,268	0,247	525,1075	0,154	0,069034483
Off-Highway Trucks	2013	751	1000	Off-Highway Trucks_2013_1000	0,543085	0,456	1,9094	6,89277	0,005	0,205	0,189	520,5876	0,153	0,068586207
Off-Highway Trucks	2014	121	175	Off-Highway Trucks_2014_175	0,610195	0,513	3,47308	5,21922	0,005	0,292	0,269	514,0574	0,152	0,068137931
Off-Highway Trucks	2014	176	250	Off-Highway Trucks_2014_250	0,574728	0,483	1,93163	5,4411	0,005	0,235	0,217	512,8333	0,152	0,068137931
Off-Highway Trucks	2014	251	500	Off-Highway Trucks_2014_500	0,468214	0,393	2,07518	4,68575	0,005	0,18	0,165	521,0573	0,154	0,069034483
Off-Highway Trucks	2014	501	750	Off-Highway Trucks_2014_750	0,576983	0,485	2,95299	5,57816	0,005	0,231	0,212	521,2295	0,154	0,069034483
Off-Highway Trucks	2014	751	1000	Off-Highway Trucks_2014_1000	0,493307	0,415	1,77934	6,36534	0,005	0,187	0,172	516,9385	0,153	0,068586207
Off-Highway Trucks	2015	121	175	Off-Highway Trucks_2015_175	0,604782	0,508	3,48853	5,10449	0,005	0,284	0,262	508,7011	0,152	0,068137931
Off-Highway Trucks	2015	176	250	Off-Highway Trucks_2015_250	0,563373	0,473	1,89994	5,24228	0,005	0,227	0,209	507,8087	0,152	0,068137931
Off-Highway Trucks	2015	251	500	Off-Highway Trucks_2015_500	0,457555	0,384	2,0367	4,52794	0,005	0,173	0,159	515,8419	0,154	0,069034483
Off-Highway Trucks	2015	501	750	Off-Highway Trucks_2015_750	0,537539	0,452	2,61969	5,12427	0,005	0,208	0,192	514,6436	0,154	0,069034483
Off-Highway Trucks	2015	751	1000	Off-Highway Trucks_2015_1000	0,489174	0,411	1,77206	6,28012	0,005	0,185	0,17	511,1369	0,153	0,068586207
Off-Highway Trucks	2016	121	175	Off-Highway Trucks_2016_175	0,562854	0,473	3,45883	4,64707	0,005	0,258	0,237	503,5515	0,152	0,068137931
Off-Highway Trucks	2016	176	250	Off-Highway Trucks_2016_250	0,530487	0,446	1,82377	4,82646	0,005	0,208	0,191	502,4732	0,152	0,068137931
Off-Highway Trucks	2016	251	500	Off-Highway Trucks_2016_500	0,418147	0,351	1,88523	4,04798	0,005	0,153	0,141	509,8604	0,154	0,069034483
Off-Highway Trucks	2016	501	750	Off-Highway Trucks_2016_750	0,497396	0,418	2,43646	4,64247	0,005	0,187	0,172	508,3916	0,153	0,068586207
Off-Highway Trucks	2016	751	1000	Off-Highway Trucks_2016_1000	0,467579	0,393	1,70739	6,0352	0,005	0,175	0,161	505,7218	0,153	0,068586207
Off-Highway Trucks	2017	121	175	Off-Highway Trucks_2017_175	0,525186	0,441	3,43636	4,23649	0,005	0,233	0,215	495,924	0,152	0,068137931
Off-Highway Trucks	2017	176	250	Off-Highway Trucks_2017_250	0,496493	0,417	1,75281	4,36785	0,005	0,189	0,174	494,7935	0,152	0,068137931
Off-Highway Trucks	2017	251	500	Off-Highway Trucks_2017_500	0,387096	0,325	1,74773	3,66841	0,005	0,136	0,125	501,4368	0,154	0,069034483
Off-Highway Trucks	2017	501	750	Off-Highway Trucks_2017_750	0,468516	0,394	2,35644	4,25656	0,005	0,17	0,157	500,1987	0,153	0,068586207
Off-Highway Trucks	2017	751	1000	Off-Highway Trucks_2017_1000	0,430867	0,362	1,54555	5,65254	0,005	0,159	0,146	497,1154	0,152	0,068137931
Off-Highway Trucks	2018	121	175	Off-Highway Trucks_2018_175	0,456313	0,383	3,38333	3,54273	0,005	0,192	0,177	488,0439	0,152	0,068137931
Off-Highway Trucks	2018	176	250	Off-Highway Trucks_2018_250	0,405448	0,341	1,54329	3,45071	0,005	0,141	0,13	487,6353	0,152	0,068137931
Off-Highway Trucks	2018	251	500	Off-Highway Trucks_2018_500	0,341588	0,287	1,5595	3,08995	0,005	0,113	0,104	493,5059	0,154	0,069034483
Off-Highway Trucks	2018	501	750	Off-Highway Trucks_2018_750	0,413946	0,348	2,17619	3,69054	0,005	0,143	0,132	492,1136	0,153	0,068586207
Off-Highway Trucks	2018	751	1000	Off-Highway Trucks_2018_1000	0,352998	0,297	1,35734	4,85753	0,005	0,126	0,116	487,7902	0,152	0,068137931
Off-Highway Trucks	2019	121	175	Off-Highway Trucks_2019_175	0,38382	0,323	3,32598	2,82463	0,005	0,149	0,137	480,3623	0,152	0,068137931
Off-Highway Trucks	2019	176	250	Off-Highway Trucks_2019_250	0,365362	0,307	1,46079	2,98481	0,005	0,119	0,109	480,1703	0,152	0,068137931
Off-Highway Trucks	2019	251	500	Off-Highway Trucks_2019_500	0,313575	0,263	1,48346	2,66851	0,005	0,097	0,089	485,3832	0,154	0,069034483
Off-Highway Trucks	2019	501	750	Off-Highway Trucks_2019_750	0,389037	0,327	2,04129	3,32044	0,005	0,129	0,118	483,2182	0,153	0,068586207
Off-Highway Trucks	2019	751	1000	Off-Highway Trucks_2019_1000	0,351304	0,295	1,3561	4,76495	0,005	0,124	0,114	480,3479	0,152	0,068137931
Off-Highway Trucks	2020	121	175	Off-Highway Trucks_2020_175	0,36879	0,31	3,3388	2,62769	0,005	0,137	0,126	470,0967	0,152	0,068137931
Off-Highway Trucks	2020	176	250	Off-Highway Trucks_2020_250	0,327003	0,275	1,39106	2,50726	0,005	0,098	0,09	470,1675	0,152	0,068137931
Off-Highway Trucks	2020	251	500	Off-Highway Trucks_2020_500	0,292906	0,246	1,41417	2,34677	0,005	0,086	0,079	474,5787	0,153	0,068586207
Off-Highway Trucks	2020	501	750	Off-Highway Trucks_2020_750	0,371665	0,312	2,02683	3,05816	0,005	0,12	0,11	472,7499	0,153	0,068586207
Off-Highway Trucks	2020	751	1000	Off-Highway Trucks_2020_1000	0,360605	0,303	1,37163	4,79365	0,005	0,125	0,115	469,8892	0,152	0,068137931
Off-Highway Trucks	2021	121	175	Off-Highway Trucks_2021_175	0,331341	0,278	3,32405	2,24626	0,005	0,113	0,104	470,2898	0,152	0,068137931
Off-Highway Trucks	2021	176	250	Off-Highway Trucks_2021_250	0,29675	0,249	1,34839	2,10869	0,005	0,082	0,076	470,1932	0,152	0,068137931
Off-Highway Trucks	2021	251	500	Off-Highway Trucks_2021_500	0,267636	0,225	1,33781	1,95357	0,005	0,072	0,066	474,542	0,153	0,068586207
Off-Highway Trucks	2021	501	750	Off-Highway Trucks_2021_750	0,348975	0,293	1,93522	2,66798	0,005	0,106	0,098	472,991	0,153	0,068586207
Off-Highway Trucks	2021	751	1000	Off-Highway Trucks_2021_1000	0,304392	0,256	1,25154	4,15817	0,005	0,099	0,091	471,0552	0,152	0,068137931
Off-Highway Trucks	2022	121	175	Off-Highway Trucks_2022_175	0,286556	0,241	3,28383	1,81091	0,005	0,088	0,081	470,1813	0,152	0,068137931
Off-Highway Trucks	2022	176	250	Off-Highway Trucks_2022_250	0,255309	0,215	1,27852	1,61794	0,005	0,064	0,059	469,6151	0,152	0,068137931
Off-Highway Trucks	2022	251	500	Off-Highway Trucks_2022_500	0,233409	0,196	1,24664	1,48975	0,005	0,054	0,05	474,7136	0,154	0,069034483
Off-Highway Trucks	2022	501	750	Off-Highway Trucks_2022_750	0,313397	0,263	1,74571	2,26799	0,005	0,088	0,081	473,9773	0,153	0,068586207
Off-Highway Trucks	2022	751	1000	Off-Highway Trucks_2022_1000	0,27833	0,234	1,2141	3,84239	0,005	0,086	0,079	472,3437	0,153	0,068586207
Off-Highway Trucks	2023	121	175	Off-Highway Trucks_2023_175	0,280582	0,236	3,30432	1,68277	0,005	0,081	0,074	470,2917	0,152	0,068137931
Off-Highway Trucks	2023	176	250	Off-Highway Trucks_2023_250	0,24623	0,207	1,27325	1,45572	0,005	0,059	0,054	469,4464	0,152	0,068137931
Off-Highway Trucks	2023	251	500	Off-Highway Trucks_2023_500	0,222566	0,187	1,22057	1,32428	0,005	0,048	0,044	475,0488	0,154	0,069034483
Off-Highway Trucks	2023	501	750	Off-Highway Trucks_2023_750	0,312722	0,263	1,71923	2,18151	0,005	0,084	0,078	473,7666	0,153	0,068586207
Off-Highway Trucks	2023	751	1000	Off-Highway Trucks_2023_1000	0,254284	0,214	1,19398	3,54374	0,005	0,074	0,068	472,8574	0,153	0,068586207
Off-Highway Trucks	2024	121	175	Off-Highway Trucks_2024_175	com	0,224	3,3248	1,49436	0,005	0,07	0,064	470,2638	0,152	0,068137931
Off-Highway Trucks	2024	176	250	Off-Highway Trucks_2024_250	0,240426	0,202	1,25915	1,35543	0,005	0,054	0,05	469,1126	0,152	0,068137931
Off-Highway Trucks	2024	251	500	Off-Highway Trucks_2024_500	0,219543	0,184	1,20637	1,23518	0,005	0,044	0,041	475,2203	0,154	0,069034483
Off-Highway Trucks	2024	501	750	Off-Highway Trucks_2024_750	0,308071	0,259	1,64986	2,08486	0,005	0,079	0,073	473,8394	0,153	0,068586207
Off-Highway Trucks	2024	751	1000	Off-Highway Trucks_2024_1000	0,248432	0,209	1,19994	3,43925	0,005	0,069	0,064	473,0969	0,153	0,068586207
Off-Highway Trucks	2025	121	175	Off-Highway Trucks_2025_175	0,254265	0,214	3,32765	1,3354	0,005	0,065	0,06	470,0035	0,152	0,068137931
Off-Highway Trucks	2025	176	250	Off-Highway Trucks_2025_250	0,220008	0,185	1,21268	1,12886	0,005	0,043	0,04	469,1258	0,152	0,068137931
Off-Highway Trucks	2025	251	500	Off-Highway Trucks_2025_500	0,210955	0,177	1,18233	1,06379	0,005	0,038	0,035	474,9697	0,154	0,069034483
Off-Highway Trucks	2025	501	750	Off-Highway Trucks_2025_750	0,280009	0,235	1,57807	1,75055	0,005	0,066	0,061	476,314	0,154	0,069034483
Off-Highway Trucks	2025	751	1000	Off-Highway Trucks_2025_1000	0,222695	0,187	1,14565	3,13521	0,005	0,057	0,052	473,3693	0,153	0,068586207
Off-Highway Trucks	2030	121	175	Off-Highway Trucks_2030_175	0,739	0,229	3,425	0,563	0,006	0,025	0,025	568,299	0,02	0,008965517

Off-Highway Trucks	2030	176	250	Off-Highway Trucks_2030_250	0,932	0,217	1,166	0,481	0,006	0,017	0,017	568,3	0,019	0,008517241
Off-Highway Trucks	2030	251	500	Off-Highway Trucks_2030_500	1,52	0,216	1,104	0,458	0,005	0,017	0,017	568,299	0,019	0,008517241
Off-Highway Trucks	2030	501	750	Off-Highway Trucks_2030_750	2,467	0,217	1,104	0,463	0,005	0,017	0,017	568,299	0,019	0,008517241
Off-Highway Trucks	2030	751	1000	Off-Highway Trucks_2030_1000	3,55	0,22	1,107	2,651	0,005	0,033	0,033	568,3	0,019	0,008517241
Off-Highway Trucks	2035	121	175	Off-Highway Trucks_2035_175	0,68	0,211	3,425	0,38	0,006	0,016	0,016	568,299	0,019	0,008517241
Off-Highway Trucks	2035	176	250	Off-Highway Trucks_2035_250	0,894	0,208	1,167	0,353	0,006	0,013	0,013	568,299	0,018	0,008068966
Off-Highway Trucks	2035	251	500	Off-Highway Trucks_2035_500	1,461	0,208	1,105	0,348	0,005	0,013	0,013	568,299	0,018	0,008068966
Off-Highway Trucks	2035	501	750	Off-Highway Trucks_2035_750	2,371	0,208	1,105	0,348	0,005	0,013	0,013	568,299	0,018	0,008068966
Off-Highway Trucks	2035	751	1000	Off-Highway Trucks_2035_1000	3,368	0,209	1,105	2,565	0,005	0,028	0,028	568,299	0,018	0,008068966
Off-Highway Trucks	2040	121	175	Off-Highway Trucks_2040_175	0,662	0,205	3,426	0,318	0,006	0,013	0,013	568,299	0,018	0,008068966
Off-Highway Trucks	2040	176	250	Off-Highway Trucks_2040_250	0,877	0,204	1,167	0,305	0,006	0,012	0,012	568,3	0,018	0,008068966
Off-Highway Trucks	2040	251	500	Off-Highway Trucks_2040_500	1,434	0,204	1,105	0,305	0,005	0,012	0,012	568,299	0,018	0,008068966
Off-Highway Trucks	2040	501	750	Off-Highway Trucks_2040_750	2,327	0,204	1,105	0,305	0,005	0,012	0,012	568,299	0,018	0,008068966
Off-Highway Trucks	2040	751	1000	Off-Highway Trucks_2040_1000	3,296	0,205	1,105	2,532	0,005	0,026	0,026	568,299	0,018	0,008068966
Other Construction Equipment	1990	6	15	Other Construction Equipment_1990_15	5,348	1,804	4,999	9,999	1,049	0,975	0,975	568,3	0,162	0,07262069
Other Construction Equipment	1990	16	25	Other Construction Equipment_1990_25	8,578	2,213	4,999	6,919	0,855	0,741	0,741	568,299	0,199	0,089206897
Other Construction Equipment	1990	26	50	Other Construction Equipment_1990_50	39,33	4,791	9,693	7,947	0,871	1,267	1,267	568,299	0,432	0,193655172
Other Construction Equipment	1990	51	120	Other Construction Equipment_1990_120	56,637	2,388	5,782	15,176	0,791	1,343	1,343	568,299	0,215	0,09637931
Other Construction Equipment	1990	121	175	Other Construction Equipment_1990_175	60,86	1,948	5,191	15,112	0,758	1,085	1,085	568,299	0,175	0,078448276
Other Construction Equipment	1990	251	500	Other Construction Equipment_1990_500	128,26	1,72	11,412	14,332	0,662	0,927	0,927	568,299	0,155	0,069482759
Other Construction Equipment	2000	6	15	Other Construction Equipment_2000_15	4,374	1,475	4,49	8,242	0,079	0,676	0,676	568,299	0,133	0,05962069
Other Construction Equipment	2000	16	25	Other Construction Equipment_2000_25	7,591	1,958	4,53	6,358	0,065	0,563	0,563	568,3	0,176	0,078896552
Other Construction Equipment	2000	26	50	Other Construction Equipment_2000_50	30,619	3,73	7,85	6,784	0,066	0,816	0,816	568,299	0,336	0,15062069
Other Construction Equipment	2000	51	120	Other Construction Equipment_2000_120	38,817	1,636	4,283	9,507	0,06	0,786	0,786	568,3	0,147	0,065896552
Other Construction Equipment	2000	121	175	Other Construction Equipment_2000_175	34,573	1,106	3,417	8,749	0,057	0,453	0,453	568,299	0,099	0,04437931
Other Construction Equipment	2000	251	500	Other Construction Equipment_2000_500	61,92	0,83	3,67	8,069	0,05	0,321	0,321	568,299	0,074	0,033172414
Other Construction Equipment	2005	6	15	Other Construction Equipment_2005_15	2,271	0,766	3,469	5,228	0,079	0,361	0,361	568,299	0,069	0,030931034
Other Construction Equipment	2005	16	25	Other Construction Equipment_2005_25	3,564	0,919	2,642	5,412	0,065	0,347	0,347	568,3	0,082	0,036758621
Other Construction Equipment	2005	26	50	Other Construction Equipment_2005_50	26,204	3,192	7,102	6,226	0,066	0,739	0,739	568,299	0,288	0,129103448
Other Construction Equipment	2005	51	120	Other Construction Equipment_2005_120	33,145	1,397	4,043	8,067	0,06	0,725	0,725	568,299	0,126	0,056482759
Other Construction Equipment	2005	121	175	Other Construction Equipment_2005_175	28,235	0,903	3,208	7,379	0,057	0,392	0,392	568,299	0,081	0,036310345
Other Construction Equipment	2005	251	500	Other Construction Equipment_2005_500	41,035	0,55	2,051	6,334	0,05	0,22	0,22	568,299	0,049	0,021965517
Other Construction Equipment	2010	6	15	Other Construction Equipment_2010_15	1,52864	1,284	5,29076	5,55407	0,005	0,497	0,457	587,5495	0,171	0,076655172
Other Construction Equipment	2010	16	25	Other Construction Equipment_2010_25	1,52864	1,284	5,29076	5,55407	0,005	0,497	0,457	587,5495	0,171	0,076655172
Other Construction Equipment	2010	26	50	Other Construction Equipment_2010_50	1,52864	1,284	5,29076	5,55407	0,005	0,497	0,457	587,5495	0,171	0,076655172
Other Construction Equipment	2010	51	120	Other Construction Equipment_2010_120	0,92739	0,779	3,89903	7,11752	0,005	0,549	0,505	523,1661	0,152	0,068137931
Other Construction Equipment	2010	121	175	Other Construction Equipment_2010_175	0,769602	0,647	3,47406	7,30949	0,005	0,38	0,349	522,1244	0,152	0,068137931
Other Construction Equipment	2010	251	500	Other Construction Equipment_2010_500	0,480247	0,404	3,20434	5,78616	0,005	0,219	0,201	530,8514	0,155	0,069482759
Other Construction Equipment	2011	6	15	Other Construction Equipment_2011_15	1,531741	1,287	5,36962	5,5686	0,005	0,499	0,459	586,0703	0,171	0,076655172
Other Construction Equipment	2011	16	25	Other Construction Equipment_2011_25	1,531741	1,287	5,36962	5,5686	0,005	0,499	0,459	586,0703	0,171	0,076655172
Other Construction Equipment	2011	26	50	Other Construction Equipment_2011_50	1,531741	1,287	5,36962	5,5686	0,005	0,499	0,459	586,0703	0,171	0,076655172
Other Construction Equipment	2011	51	120	Other Construction Equipment_2011_120	0,909764	0,764	3,89723	6,98332	0,005	0,542	0,498	521,5282	0,152	0,068137931
Other Construction Equipment	2011	121	175	Other Construction Equipment_2011_175	0,725704	0,61	3,41832	6,92098	0,005	0,361	0,332	520,664	0,152	0,068137931
Other Construction Equipment	2011	251	500	Other Construction Equipment_2011_500	0,449646	0,378	2,91483	5,42766	0,005	0,204	0,188	529,9639	0,155	0,069482759
Other Construction Equipment	2012	6	15	Other Construction Equipment_2012_15	1,548775	1,301	5,47004	5,58169	0,005	0,503	0,463	584,6639	0,171	0,076655172
Other Construction Equipment	2012	16	25	Other Construction Equipment_2012_25	1,548775	1,301	5,47004	5,58169	0,005	0,503	0,463	584,6639	0,171	0,076655172
Other Construction Equipment	2012	26	50	Other Construction Equipment_2012_50	1,548775	1,301	5,47004	5,58169	0,005	0,503	0,463	584,6639	0,171	0,076655172
Other Construction Equipment	2012	51	120	Other Construction Equipment_2012_120	0,910724	0,765	3,91674	6,95644	0,005	0,543	0,5	519,9075	0,152	0,068137931
Other Construction Equipment	2012	121	175	Other Construction Equipment_2012_175	0,730754	0,614	3,4429	6,91612	0,005	0,363	0,334	519,3479	0,152	0,068137931
Other Construction Equipment	2012	251	500	Other Construction Equipment_2012_500	0,458869	0,386	2,95715	5,42334	0,005	0,206	0,189	528,6246	0,155	0,069482759
Other Construction Equipment	2013	6	15	Other Construction Equipment_2013_15	1,571874	1,321	5,57699	5,60361	0,005	0,509	0,468	581,8471	0,171	0,076655172
Other Construction Equipment	2013	16	25	Other Construction Equipment_2013_25	1,571874	1,321	5,57699	5,60361	0,005	0,509	0,468	581,8471	0,171	0,076655172
Other Construction Equipment	2013	26	50	Other Construction Equipment_2013_50	1,571874	1,321	5,57699	5,60361	0,005	0,509	0,468	581,8471	0,171	0,076655172
Other Construction Equipment	2013	51	120	Other Construction Equipment_2013_120	0,892781	0,75	3,91866	6,82868	0,005	0,532	0,489	517,5939	0,152	0,068137931
Other Construction Equipment	2013	121	175	Other Construction Equipment_2013_175	0,708053	0,595	3,41257	6,69102	0,005	0,351	0,323	516,9857	0,152	0,068137931
Other Construction Equipment	2013	251	500	Other Construction Equipment_2013_500	0,440093	0,37	2,79519	5,14317	0,005	0,194	0,179	525,1086	0,154	0,069034483
Other Construction Equipment	2014	6	15	Other Construction Equipment_2014_15	1,547867	1,301	5,60223	5,56546	0,005	0,502	0,462	578,9591	0,171	0,076655172
Other Construction Equipment	2014	16	25	Other Construction Equipment_2014_25	1,547867	1,301	5,60223	5,56546	0,005	0,502	0,462	578,9591	0,171	0,076655172
Other Construction Equipment	2014	26	50	Other Construction Equipment_2014_50	1,547867	1,301	5,60223	5,56546	0,005	0,502	0,462	578,9591	0,171	0,076655172
Other Construction Equipment	2014	51	120	Other Construction Equipment_2014_120	0,866935	0,728	3,90558	6,63282	0,005	0,518	0,476	515,2847	0,152	0,068137931
Other Construction Equipment	2014	121	175	Other Construction Equipment_2014_175	0,674237	0,567	3,38516	6,37185	0,005	0,333	0,307	514,5518	0,152	0,068137931
Other Construction Equipment	2014	251	500	Other Construction Equipment_2014_500	0,392211	0,33	2,47571	4,5608	0,005	0,168	0,155	520,9444	0,154	0,069034483
Other Construction Equipment	2015	6	15	Other Construction Equipment_2015_15	1,557753	1,309	5,68113	5,56397	0,005	0,503	0,463	573,0198	0,171	0,076655172
Other Construction Equipment	2015	16	25	Other Construction Equipment_2015_25	1,557753	1,309	5,68113	5,56397	0,005	0,503	0,463	573,0198	0,171	0,076655172
Other Construction Equipment	2015	26	50	Other Construction Equipment_2015_50	1,557753	1,309	5,68113	5,56397	0,005	0,503	0,463	573,0198	0,171	0,076655172
Other Construction Equipment	2015	51	120	Other Construction Equipment_2015_120	0,860334	0,723	3,9159	6,53649	0,005	0,512	0,471	510,1706	0,152	0,068137931
Other Construction Equipment	2015	121	175	Other Construction Equipment_2015_175	0,66302	0,557	3,38183	6,2305	0,005	0,326	0,3	509,3069	0,152	0,068137931
Other Construction Equipment	2015	251	500	Other Construction Equipment_2015_500	0,386006	0,324	2,40724	4,41519	0,005	0,163	0,15	515,1953	0,154	0,069034483
Other Construction Equipment	2016	6	15	Other Construction Equipment_2016_15	1,524032	1,281	5,67687	5,49921	0,005	0,492	0,453	566,9782	0,171	0,076655172
Other Construction Equipment	2016	16	25	Other Construction Equipment_2016_25	1,524032	1,281	5,67687	5,49921	0,005	0,492	0,453	566,9782	0,171	0,076655172
Other Construction Equipment	2016	26	50	Other Construction Equipment_2016_50	1,524032	1,281	5,67687	5,49921	0,005	0,492	0,453	566,9782	0,171	0,076655172
Other Construction Equipment	2016	51	120	Other Construction Equipment_2016_120	0,837049	0,703	3,90894	6,32533	0,005	0,496	0,456	505,349	0,152	0,068137931
Other Construction Equipment	2016	121	175	Other Construction Equipment_2016_175	0,62413	0,524	3,35672	5,81763	0,005	0,306	0,281	503,9641	0,152	0,068137931

Other Construction Equipment	2016	251	500	Other Construction Equipment_2016_500	0,366005	0,308	2,28488	4,08972	0,005	0,151	0,139	509,7062	0,154	0,069034483
Other Construction Equipment	2017	6	15	Other Construction Equipment_2017_15	1,480652	1,244	5,65509	5,42066	0,005	0,477	0,439	558,0007	0,171	0,076655172
Other Construction Equipment	2017	16	25	Other Construction Equipment_2017_25	1,480652	1,244	5,65509	5,42066	0,005	0,477	0,439	558,0007	0,171	0,076655172
Other Construction Equipment	2017	26	50	Other Construction Equipment_2017_50	1,480652	1,244	5,65509	5,42066	0,005	0,477	0,439	558,0007	0,171	0,076655172
Other Construction Equipment	2017	51	120	Other Construction Equipment_2017_120	0,804436	0,676	3,88542	6,06955	0,005	0,475	0,437	497,3832	0,152	0,068137931
Other Construction Equipment	2017	121	175	Other Construction Equipment_2017_175	0,595557	0,5	3,33767	5,49424	0,005	0,29	0,267	495,9311	0,152	0,068137931
Other Construction Equipment	2017	251	500	Other Construction Equipment_2017_500	0,3449	0,29	2,12114	3,77706	0,005	0,138	0,127	501,1295	0,154	0,069034483
Other Construction Equipment	2018	6	15	Other Construction Equipment_2018_15	1,39068	1,169	5,54108	5,27161	0,005	0,449	0,413	548,9388	0,171	0,076655172
Other Construction Equipment	2018	16	25	Other Construction Equipment_2018_25	1,39068	1,169	5,54108	5,27161	0,005	0,449	0,413	548,9388	0,171	0,076655172
Other Construction Equipment	2018	26	50	Other Construction Equipment_2018_50	1,39068	1,169	5,54108	5,27161	0,005	0,449	0,413	548,9388	0,171	0,076655172
Other Construction Equipment	2018	51	120	Other Construction Equipment_2018_120	0,711314	0,598	3,79863	5,44123	0,005	0,417	0,383	490,018	0,153	0,068586207
Other Construction Equipment	2018	121	175	Other Construction Equipment_2018_175	0,519398	0,436	3,26346	4,75499	0,005	0,25	0,23	487,9859	0,152	0,068137931
Other Construction Equipment	2018	251	500	Other Construction Equipment_2018_500	0,298599	0,251	1,81261	3,16693	0,005	0,115	0,105	493,36	0,154	0,069034483
Other Construction Equipment	2019	6	15	Other Construction Equipment_2019_15	1,370834	1,152	5,54123	5,20338	0,005	0,437	0,402	539,7349	0,171	0,076655172
Other Construction Equipment	2019	16	25	Other Construction Equipment_2019_25	1,370834	1,152	5,54123	5,20338	0,005	0,437	0,402	539,7349	0,171	0,076655172
Other Construction Equipment	2019	26	50	Other Construction Equipment_2019_50	1,370834	1,152	5,54123	5,20338	0,005	0,437	0,402	539,7349	0,171	0,076655172
Other Construction Equipment	2019	51	120	Other Construction Equipment_2019_120	0,655004	0,55	3,7535	5,04831	0,005	0,379	0,349	482,2177	0,153	0,068586207
Other Construction Equipment	2019	121	175	Other Construction Equipment_2019_175	0,490382	0,412	3,25619	4,4331	0,005	0,233	0,215	480,4518	0,152	0,068137931
Other Construction Equipment	2019	251	500	Other Construction Equipment_2019_500	0,277883	0,233	1,66739	2,85547	0,005	0,103	0,094	485,4127	0,154	0,069034483
Other Construction Equipment	2020	6	15	Other Construction Equipment_2020_15	1,276029	1,072	5,40446	5,03626	0,005	0,405	0,373	527,9656	0,171	0,076655172
Other Construction Equipment	2020	16	25	Other Construction Equipment_2020_25	1,276029	1,072	5,40446	5,03626	0,005	0,405	0,373	527,9656	0,171	0,076655172
Other Construction Equipment	2020	26	50	Other Construction Equipment_2020_50	1,276029	1,072	5,40446	5,03626	0,005	0,405	0,373	527,9656	0,171	0,076655172
Other Construction Equipment	2020	51	120	Other Construction Equipment_2020_120	0,617777	0,519	3,73189	4,7712	0,005	0,354	0,325	472,2162	0,153	0,068586207
Other Construction Equipment	2020	121	175	Other Construction Equipment_2020_175	0,461441	0,388	3,23528	4,11203	0,005	0,217	0,2	469,9837	0,152	0,068137931
Other Construction Equipment	2020	251	500	Other Construction Equipment_2020_500	0,266788	0,224	1,6338	2,63672	0,005	0,096	0,088	475,2326	0,154	0,069034483
Other Construction Equipment	2021	6	15	Other Construction Equipment_2021_15	1,201423	1,01	5,30749	4,90234	0,005	0,382	0,351	527,7834	0,171	0,076655172
Other Construction Equipment	2021	16	25	Other Construction Equipment_2021_25	1,201423	1,01	5,30749	4,90234	0,005	0,382	0,351	527,7834	0,171	0,076655172
Other Construction Equipment	2021	26	50	Other Construction Equipment_2021_50	1,201423	1,01	5,30749	4,90234	0,005	0,382	0,351	527,7834	0,171	0,076655172
Other Construction Equipment	2021	51	120	Other Construction Equipment_2021_120	0,573212	0,482	3,70304	4,4558	0,005	0,323	0,298	472,275	0,153	0,068586207
Other Construction Equipment	2021	121	175	Other Construction Equipment_2021_175	0,392185	0,33	3,18275	3,43847	0,005	0,18	0,165	469,7642	0,152	0,068137931
Other Construction Equipment	2021	251	500	Other Construction Equipment_2021_500	0,256006	0,215	1,59874	2,42822	0,005	0,09	0,082	475,2124	0,154	0,069034483
Other Construction Equipment	2022	6	15	Other Construction Equipment_2022_15	1,094466	0,92	5,16732	4,74117	0,005	0,348	0,32	529,1825	0,171	0,076655172
Other Construction Equipment	2022	16	25	Other Construction Equipment_2022_25	1,094466	0,92	5,16732	4,74117	0,005	0,348	0,32	529,1825	0,171	0,076655172
Other Construction Equipment	2022	26	50	Other Construction Equipment_2022_50	1,094466	0,92	5,16732	4,74117	0,005	0,348	0,32	529,1825	0,171	0,076655172
Other Construction Equipment	2022	51	120	Other Construction Equipment_2022_120	0,523663	0,44	3,66623	4,09846	0,005	0,288	0,265	472,3178	0,153	0,068586207
Other Construction Equipment	2022	121	175	Other Construction Equipment_2022_175	0,351187	0,295	3,15539	2,99437	0,005	0,156	0,144	469,6126	0,152	0,068137931
Other Construction Equipment	2022	251	500	Other Construction Equipment_2022_500	0,223796	0,188	1,43828	1,97544	0,005	0,074	0,068	475,9983	0,154	0,069034483
Other Construction Equipment	2023	6	15	Other Construction Equipment_2023_15	1,030598	0,866	5,07368	4,59446	0,005	0,322	0,296	529,3389	0,171	0,076655172
Other Construction Equipment	2023	16	25	Other Construction Equipment_2023_25	1,030598	0,866	5,07368	4,59446	0,005	0,322	0,296	529,3389	0,171	0,076655172
Other Construction Equipment	2023	26	50	Other Construction Equipment_2023_50	1,030598	0,866	5,07368	4,59446	0,005	0,322	0,296	529,3389	0,171	0,076655172
Other Construction Equipment	2023	51	120	Other Construction Equipment_2023_120	0,482844	0,406	3,63188	3,79013	0,005	0,259	0,238	471,9899	0,153	0,068586207
Other Construction Equipment	2023	121	175	Other Construction Equipment_2023_175	0,325455	0,273	3,14152	2,69821	0,005	0,14	0,129	469,5579	0,152	0,068137931
Other Construction Equipment	2023	251	500	Other Construction Equipment_2023_500	0,214667	0,18	1,39596	1,81226	0,005	0,069	0,063	476,1847	0,154	0,069034483
Other Construction Equipment	2024	6	15	Other Construction Equipment_2024_15	0,984979	0,828	5,03181	4,51017	0,005	0,305	0,28	529,2094	0,171	0,076655172
Other Construction Equipment	2024	16	25	Other Construction Equipment_2024_25	0,984979	0,828	5,03181	4,51017	0,005	0,305	0,28	529,2094	0,171	0,076655172
Other Construction Equipment	2024	26	50	Other Construction Equipment_2024_50	0,984979	0,828	5,03181	4,51017	0,005	0,305	0,28	529,2094	0,171	0,076655172
Other Construction Equipment	2024	51	120	Other Construction Equipment_2024_120	0,454266	0,382	3,61958	3,58173	0,005	0,237	0,218	472,1254	0,153	0,068586207
Other Construction Equipment	2024	121	175	Other Construction Equipment_2024_175	0,310043	0,261	3,14951	2,52019	0,005	0,13	0,12	469,5445	0,152	0,068137931
Other Construction Equipment	2024	251	500	Other Construction Equipment_2024_500	0,208244	0,175	1,38248	1,67692	0,005	0,064	0,059	476,4838	0,154	0,069034483
Other Construction Equipment	2025	6	15	Other Construction Equipment_2025_15	0,901061	0,757	4,87388	4,30575	0,005	0,268	0,246	528,9535	0,171	0,076655172
Other Construction Equipment	2025	16	25	Other Construction Equipment_2025_25	0,901061	0,757	4,87388	4,30575	0,005	0,268	0,246	528,9535	0,171	0,076655172
Other Construction Equipment	2025	26	50	Other Construction Equipment_2025_50	0,901061	0,757	4,87388	4,30575	0,005	0,268	0,246	528,9535	0,171	0,076655172
Other Construction Equipment	2025	51	120	Other Construction Equipment_2025_120	0,40612	0,341	3,58397	3,25221	0,005	0,203	0,187	472,7482	0,153	0,068586207
Other Construction Equipment	2025	121	175	Other Construction Equipment_2025_175	0,279358	0,235	3,13647	2,16742	0,005	0,112	0,103	469,843	0,152	0,068137931
Other Construction Equipment	2025	251	500	Other Construction Equipment_2025_500	0,200431	0,168	1,3582	1,55241	0,005	0,059	0,055	476,2959	0,154	0,069034483
Other Construction Equipment	2030	6	15	Other Construction Equipment_2030_15	1,96	0,661	3,469	4,142	0,008	0,161	0,161	568,299	0,059	0,026448276
Other Construction Equipment	2030	16	25	Other Construction Equipment_2030_25	2,657	0,685	2,339	4,332	0,007	0,161	0,161	568,299	0,061	0,027344828
Other Construction Equipment	2030	26	50	Other Construction Equipment_2030_50	3,526	0,429	4,39	3,19	0,007	0,03	0,03	568,299	0,038	0,017034483
Other Construction Equipment	2030	51	120	Other Construction Equipment_2030_120	5,348	0,225	3,538	1,576	0,006	0,027	0,027	568,3	0,02	0,008965517
Other Construction Equipment	2030	121	175	Other Construction Equipment_2030_175	5,057	0,161	3,127	0,459	0,006	0,019	0,019	568,299	0,014	0,006275862
Other Construction Equipment	2030	251	500	Other Construction Equipment_2030_500	11,523	0,154	1,028	0,391	0,005	0,014	0,014	568,3	0,013	0,005827586
Other Construction Equipment	2035	6	15	Other Construction Equipment_2035_15	1,96	0,661	3,469	4,142	0,008	0,161	0,161	568,299	0,059	0,026448276
Other Construction Equipment	2035	16	25	Other Construction Equipment_2035_25	2,657	0,685	2,339	4,332	0,007	0,161	0,161	568,299	0,061	0,027344828
Other Construction Equipment	2035	26	50	Other Construction Equipment_2035_50	3,367	0,41	4,377	3,124	0,007	0,018	0,018	568,299	0,037	0,016586207
Other Construction Equipment	2035	51	120	Other Construction Equipment_2035_120	5,057	0,213	3,536	1,474	0,006	0,017	0,017	568,299	0,019	0,008517241
Other Construction Equipment	2035	121	175	Other Construction Equipment_2035_175	4,686	0,15	3,128	0,334	0,006	0,013	0,013	568,299	0,013	0,005827586
Other Construction Equipment	2035	251	500	Other Construction Equipment_2035_500	11,034	0,147	1,029	0,311	0,005	0,011	0,011	568,299	0,013	0,005827586
Other Construction Equipment	2040	6	15	Other Construction Equipment_2040_15	1,96	0,661	3,47	4,142	0,008	0,161	0,161	568,3	0,059	0,026448276
Other Construction Equipment	2040	16	25	Other Construction Equipment_2040_25	2,657	0,685	2,339	4,332	0,007	0,161	0,161	568,299	0,061	0,027344828
Other Construction Equipment	2040	26	50	Other Construction Equipment_2040_50	3,359	0,409	4,377	3,096	0,007	0,015	0,015	568,3	0,036	0,016137931
Other Construction Equipment	2040	51	120	Other Construction Equipment_2040_120	4,992	0,21	3,536	1,441	0,006	0,014	0,014	568,299	0,018	0,008068966
Other Construction Equipment	2040	121	175	Other Construction Equipment_2040_175	4,556	0,145	3,128	0,29	0,006	0,011	0,011	568,299	0,013	0,005827586
Other Construction Equipment	2040	251	500	Other Construction Equipment_2040_500	10,825	0,145	1,029	0,282	0,005	0,01	0,01	568,299	0,013	0,005827586

Other General Industrial Equipment	1990	6	15	Other General Industrial Equipment_1990_15	4,264	1,804	4,999	9,999	0,833	0,968	0,968	568,299	0,162	0,07262069
Other General Industrial Equipment	1990	16	25	Other General Industrial Equipment_1990_25	12,555	2,213	4,999	6,919	0,679	0,735	0,735	568,299	0,199	0,089206897
Other General Industrial Equipment	1990	26	50	Other General Industrial Equipment_1990_50	38,808	4,828	9,768	7,957	0,692	1,266	1,266	568,299	0,435	0,195
Other General Industrial Equipment	1990	51	120	Other General Industrial Equipment_1990_120	54,2	2,363	5,72	14,962	0,628	1,331	1,331	568,299	0,213	0,095482759
Other General Industrial Equipment	1990	121	175	Other General Industrial Equipment_1990_175	57,106	1,61	5,066	13,434	0,602	0,88	0,88	568,299	0,145	0,065
Other General Industrial Equipment	1990	176	250	Other General Industrial Equipment_1990_250	80,71	1,61	5,066	13,434	0,602	0,88	0,88	568,299	0,145	0,065
Other General Industrial Equipment	1990	251	500	Other General Industrial Equipment_1990_500	139,861	1,425	11,207	12,743	0,525	0,756	0,756	568,299	0,128	0,05737931
Other General Industrial Equipment	1990	501	750	Other General Industrial Equipment_1990_750	230,516	1,425	11,207	12,743	0,538	0,756	0,756	568,299	0,128	0,05737931
Other General Industrial Equipment	1990	751	1000	Other General Industrial Equipment_1990_1000	293,256	1,417	11,207	12,743	0,538	0,746	0,746	568,299	0,127	0,056931034
Other General Industrial Equipment	2000	6	15	Other General Industrial Equipment_2000_15	2,475	1,047	4,258	7,362	0,079	0,428	0,428	568,299	0,094	0,042137931
Other General Industrial Equipment	2000	16	25	Other General Industrial Equipment_2000_25	5,83	1,027	4,322	6,284	0,064	0,431	0,431	568,299	0,092	0,041241379
Other General Industrial Equipment	2000	26	50	Other General Industrial Equipment_2000_50	36,086	4,49	9,236	7,09	0,065	0,935	0,935	568,299	0,405	0,181551724
Other General Industrial Equipment	2000	51	120	Other General Industrial Equipment_2000_120	43,196	1,883	4,733	10,664	0,059	0,91	0,91	568,299	0,169	0,075758621
Other General Industrial Equipment	2000	121	175	Other General Industrial Equipment_2000_175	44,74	1,261	3,852	9,686	0,057	0,536	0,536	568,299	0,113	0,050655172
Other General Industrial Equipment	2000	176	250	Other General Industrial Equipment_2000_250	53	1,057	3,072	9,325	0,057	0,438	0,438	568,299	0,095	0,042586207
Other General Industrial Equipment	2000	251	500	Other General Industrial Equipment_2000_500	93,834	0,956	5,179	8,862	0,049	0,385	0,385	568,299	0,086	0,038551724
Other General Industrial Equipment	2000	501	750	Other General Industrial Equipment_2000_750	154,656	0,956	5,179	8,862	0,051	0,385	0,385	568,3	0,086	0,038551724
Other General Industrial Equipment	2000	751	1000	Other General Industrial Equipment_2000_1000	214,063	1,034	5,791	9,479	0,051	0,385	0,385	568,299	0,093	0,041689655
Other General Industrial Equipment	2005	6	15	Other General Industrial Equipment_2005_15	1,674	0,708	3,469	4,985	0,079	0,35	0,35	568,299	0,063	0,028241379
Other General Industrial Equipment	2005	16	25	Other General Industrial Equipment_2005_25	4,288	0,755	2,4	5,226	0,064	0,315	0,315	568,299	0,068	0,030482759
Other General Industrial Equipment	2005	26	50	Other General Industrial Equipment_2005_50	33,133	4,122	8,765	6,676	0,065	0,888	0,888	568,299	0,371	0,166310345
Other General Industrial Equipment	2005	51	120	Other General Industrial Equipment_2005_120	37,812	1,649	4,418	9,041	0,059	0,867	0,867	568,299	0,148	0,066344828
Other General Industrial Equipment	2005	121	175	Other General Industrial Equipment_2005_175	38,439	1,084	3,513	8,273	0,057	0,479	0,479	568,299	0,097	0,043482759
Other General Industrial Equipment	2005	176	250	Other General Industrial Equipment_2005_250	38,228	0,762	2,065	7,795	0,057	0,301	0,301	568,299	0,068	0,030482759
Other General Industrial Equipment	2005	251	500	Other General Industrial Equipment_2005_500	66,246	0,675	2,681	7,094	0,049	0,269	0,269	568,299	0,06	0,026896552
Other General Industrial Equipment	2005	501	750	Other General Industrial Equipment_2005_750	110,94	0,686	2,681	7,252	0,051	0,272	0,272	568,3	0,061	0,027344828
Other General Industrial Equipment	2005	751	1000	Other General Industrial Equipment_2005_1000	166,893	0,806	3,276	8,322	0,051	0,28	0,28	568,299	0,072	0,032275862
Other General Industrial Equipment	2010	6	15	Other General Industrial Equipment_2010_15	1,873274	1,574	6,00712	5,68505	0,005	0,563	0,518	584,6401	0,17	0,076206897
Other General Industrial Equipment	2010	16	25	Other General Industrial Equipment_2010_25	1,873274	1,574	6,00712	5,68505	0,005	0,563	0,518	584,6401	0,17	0,076206897
Other General Industrial Equipment	2010	26	50	Other General Industrial Equipment_2010_50	1,873274	1,574	6,00712	5,68505	0,005	0,563	0,518	584,6401	0,17	0,076206897
Other General Industrial Equipment	2010	51	120	Other General Industrial Equipment_2010_120	1,01726	0,855	4,0773	7,36447	0,005	0,611	0,562	522,222	0,152	0,068137931
Other General Industrial Equipment	2010	121	175	Other General Industrial Equipment_2010_175	0,746027	0,627	3,51505	7,0202	0,005	0,379	0,349	524,278	0,153	0,068586207
Other General Industrial Equipment	2010	176	250	Other General Industrial Equipment_2010_250	0,769173	0,646	2,61803	8,04899	0,005	0,359	0,33	525,8035	0,153	0,068586207
Other General Industrial Equipment	2010	251	500	Other General Industrial Equipment_2010_500	0,489206	0,411	2,96412	5,68219	0,005	0,219	0,202	525,4767	0,153	0,068586207
Other General Industrial Equipment	2010	501	750	Other General Industrial Equipment_2010_750	0,368598	0,31	1,62081	4,78207	0,005	0,168	0,154	526,0709	0,153	0,068586207
Other General Industrial Equipment	2010	751	1000	Other General Industrial Equipment_2010_1000	0,368913	0,31	1,02418	6,10226	0,005	0,148	0,136	524,505	0,153	0,068586207
Other General Industrial Equipment	2011	6	15	Other General Industrial Equipment_2011_15	1,86071	1,564	6,08575	5,69446	0,005	0,562	0,517	583,1785	0,17	0,076206897
Other General Industrial Equipment	2011	16	25	Other General Industrial Equipment_2011_25	1,86071	1,564	6,08575	5,69446	0,005	0,562	0,517	583,1785	0,17	0,076206897
Other General Industrial Equipment	2011	26	50	Other General Industrial Equipment_2011_50	1,86071	1,564	6,08575	5,69446	0,005	0,562	0,517	583,1785	0,17	0,076206897
Other General Industrial Equipment	2011	51	120	Other General Industrial Equipment_2011_120	1,006419	0,846	4,08854	7,24885	0,005	0,609	0,56	520,9164	0,152	0,068137931
Other General Industrial Equipment	2011	121	175	Other General Industrial Equipment_2011_175	0,688559	0,579	3,47165	6,5273	0,005	0,352	0,324	522,9673	0,153	0,068586207
Other General Industrial Equipment	2011	176	250	Other General Industrial Equipment_2011_250	0,679053	0,571	2,33422	7,30022	0,005	0,313	0,288	524,489	0,153	0,068586207
Other General Industrial Equipment	2011	251	500	Other General Industrial Equipment_2011_500	0,467324	0,393	2,74249	5,42881	0,005	0,207	0,19	524,163	0,153	0,068586207
Other General Industrial Equipment	2011	501	750	Other General Industrial Equipment_2011_750	0,373245	0,314	1,62791	4,72869	0,005	0,163	0,15	524,7557	0,153	0,068586207
Other General Industrial Equipment	2011	751	1000	Other General Industrial Equipment_2011_1000	0,37971	0,319	1,03813	6,1714	0,005	0,153	0,141	523,1938	0,153	0,068586207
Other General Industrial Equipment	2012	6	15	Other General Industrial Equipment_2012_15	1,895405	1,593	6,24676	5,71254	0,005	0,569	0,524	581,7169	0,17	0,076206897
Other General Industrial Equipment	2012	16	25	Other General Industrial Equipment_2012_25	1,895405	1,593	6,24676	5,71254	0,005	0,569	0,524	581,7169	0,17	0,076206897
Other General Industrial Equipment	2012	26	50	Other General Industrial Equipment_2012_50	1,895405	1,593	6,24676	5,71254	0,005	0,569	0,524	581,7169	0,17	0,076206897
Other General Industrial Equipment	2012	51	120	Other General Industrial Equipment_2012_120	1,008569	0,847	4,12133	7,21493	0,005	0,612	0,563	519,6109	0,152	0,068137931
Other General Industrial Equipment	2012	121	175	Other General Industrial Equipment_2012_175	0,685664	0,576	3,49618	6,44491	0,005	0,349	0,321	521,6566	0,153	0,068586207
Other General Industrial Equipment	2012	176	250	Other General Industrial Equipment_2012_250	0,675065	0,567	2,33594	7,14362	0,005	0,308	0,284	523,1745	0,153	0,068586207
Other General Industrial Equipment	2012	251	500	Other General Industrial Equipment_2012_500	0,47625	0,4	2,75094	5,39821	0,005	0,207	0,19	522,8493	0,153	0,068586207
Other General Industrial Equipment	2012	501	750	Other General Industrial Equipment_2012_750	0,379047	0,319	1,63473	4,69855	0,005	0,161	0,148	523,4405	0,153	0,068586207
Other General Industrial Equipment	2012	751	1000	Other General Industrial Equipment_2012_1000	0,390508	0,328	1,05208	6,24054	0,005	0,158	0,145	521,8825	0,153	0,068586207
Other General Industrial Equipment	2013	6	15	Other General Industrial Equipment_2013_15	1,848739	1,553	6,26146	5,64536	0,005	0,556	0,511	578,7937	0,17	0,076206897
Other General Industrial Equipment	2013	16	25	Other General Industrial Equipment_2013_25	1,848739	1,553	6,26146	5,64536	0,005	0,556	0,511	578,7937	0,17	0,076206897
Other General Industrial Equipment	2013	26	50	Other General Industrial Equipment_2013_50	1,848739	1,553	6,26146	5,64536	0,005	0,556	0,511	578,7937	0,17	0,076206897
Other General Industrial Equipment	2013	51	120	Other General Industrial Equipment_2013_120	0,982208	0,825	4,11871	7,03299	0,005	0,597	0,549	516,9998	0,152	0,068137931
Other General Industrial Equipment	2013	121	175	Other General Industrial Equipment_2013_175	0,6403	0,538	3,4592	6,02319	0,005	0,324	0,298	519,0352	0,153	0,068586207
Other General Industrial Equipment	2013	176	250	Other General Industrial Equipment_2013_250	0,609561	0,512	2,15134	6,51958	0,005	0,273	0,251	520,5455	0,153	0,068586207
Other General Industrial Equipment	2013	251	500	Other General Industrial Equipment_2013_500	0,434695	0,365	2,62159	4,82071	0,005	0,183	0,168	520,2219	0,153	0,068586207
Other General Industrial Equipment	2013	501	750	Other General Industrial Equipment_2013_750	0,344704	0,29	1,58393	4,12057	0,005	0,139	0,128	520,8102	0,153	0,068586207
Other General Industrial Equipment	2013	751	1000	Other General Industrial Equipment_2013_1000	0,401306	0,337	1,06602	6,30968	0,005	0,162	0,149	519,26	0,153	0,068586207
Other General Industrial Equipment	2014	6	15	Other General Industrial Equipment_2014_15	1,810128	1,521	6,28785	5,58361	0,005	0,544	0,5	575,8705	0,17	0,076206897
Other General Industrial Equipment	2014	16	25	Other General Industrial Equipment_2014_25	1,810128	1,521	6,28785	5,58361	0,005	0,544	0,5	575,8705	0,17	0,076206897
Other General Industrial Equipment	2014	26	50	Other General Industrial Equipment_2014_50	1,810128	1,521	6,28785	5,58361	0,005	0,544	0,5	575,8705	0,17	0,076206897
Other General Industrial Equipment	2014	51	120	Other General Industrial Equipment_2014_120	0,938561	0,789	4,09005	6,72277	0,005	0,574	0,528	514,3886	0,152	0,068137931
Other General Industrial Equipment	2014	121	175	Other General Industrial Equipment_2014_175	0,621882	0,523	3,46929	5,79166	0,005	0,312	0,287	516,4138	0,153	0,068586207
Other General Industrial Equipment	2014	176	250	Other General Industrial Equipment_2014_250	0,580321	0,488	2,05376	6,15263	0,005	0,255	0,234	517,9164	0,153	0,068586207
Other General Industrial Equipment	2014	251	500	Other General Industrial Equipment_2014_500	0,422239	0,355	2,49943	4,56494	0,005	0,172	0,159	517,5945	0,153	0,068586207
Other General Industrial Equipment	2014	501	750	Other General Industrial Equipment_2014_750	0,304364	0,256	1,48882	3,62195	0,005	0,115	0,106	518,1798	0,153	0,068586207
Other General Industrial Equipment	2014	751	1000	Other General Industrial Equipment_2014_1000	0,412103	0,346	1,07997	6,37883	0,005	0,167	0,153	516,6375	0,153	0,068586207
Other General Industrial Equipment	2015	6	15	Other General Industrial Equipment_2015_15	1,779268	1,495	6,32452	5,52435	0,005	0,532	0,49	570,0241	0,17	0,076206897

Other General Industrial Equipment	2015	16	25	Other General Industrial Equipment_2015_25	1,779268	1,495	6,32452	5,52435	0,005	0,532	0,49	570,0241	0,17	0,076206897
Other General Industrial Equipment	2015	26	50	Other General Industrial Equipment_2015_50	1,779268	1,495	6,32452	5,52435	0,005	0,532	0,49	570,0241	0,17	0,076206897
Other General Industrial Equipment	2015	51	120	Other General Industrial Equipment_2015_120	0,905303	0,761	4,0811	6,50163	0,005	0,553	0,509	509,1664	0,152	0,068137931
Other General Industrial Equipment	2015	121	175	Other General Industrial Equipment_2015_175	0,589015	0,495	3,45434	5,3974	0,005	0,294	0,27	511,171	0,153	0,068586207
Other General Industrial Equipment	2015	176	250	Other General Industrial Equipment_2015_250	0,538134	0,452	1,9257	5,64293	0,005	0,23	0,211	512,6584	0,153	0,068586207
Other General Industrial Equipment	2015	251	500	Other General Industrial Equipment_2015_500	0,420225	0,353	2,43603	4,42481	0,005	0,167	0,154	512,3397	0,153	0,068586207
Other General Industrial Equipment	2015	501	750	Other General Industrial Equipment_2015_750	0,298831	0,251	1,49062	3,36512	0,005	0,109	0,1	512,9191	0,153	0,068586207
Other General Industrial Equipment	2015	751	1000	Other General Industrial Equipment_2015_1000	0,422901	0,355	1,09391	6,44797	0,005	0,171	0,158	511,3924	0,153	0,068586207
Other General Industrial Equipment	2016	6	15	Other General Industrial Equipment_2016_15	1,690474	1,42	6,25866	5,40705	0,005	0,506	0,466	564,1777	0,17	0,076206897
Other General Industrial Equipment	2016	16	25	Other General Industrial Equipment_2016_25	1,690474	1,42	6,25866	5,40705	0,005	0,506	0,466	564,1777	0,17	0,076206897
Other General Industrial Equipment	2016	26	50	Other General Industrial Equipment_2016_50	1,690474	1,42	6,25866	5,40705	0,005	0,506	0,466	564,1777	0,17	0,076206897
Other General Industrial Equipment	2016	51	120	Other General Industrial Equipment_2016_120	0,851445	0,715	4,04541	6,14411	0,005	0,518	0,476	503,9442	0,152	0,068137931
Other General Industrial Equipment	2016	121	175	Other General Industrial Equipment_2016_175	0,559455	0,47	3,43665	5,05466	0,005	0,276	0,254	505,9282	0,153	0,068586207
Other General Industrial Equipment	2016	176	250	Other General Industrial Equipment_2016_250	0,519923	0,437	1,8667	5,40733	0,005	0,217	0,2	507,4004	0,153	0,068586207
Other General Industrial Equipment	2016	251	500	Other General Industrial Equipment_2016_500	0,407021	0,342	2,36652	4,14966	0,005	0,159	0,146	507,085	0,153	0,068586207
Other General Industrial Equipment	2016	501	750	Other General Industrial Equipment_2016_750	0,289084	0,243	1,49061	3,10202	0,005	0,1	0,092	507,6584	0,153	0,068586207
Other General Industrial Equipment	2016	751	1000	Other General Industrial Equipment_2016_1000	0,288345	0,242	1,04483	4,7462	0,005	0,112	0,103	506,1474	0,153	0,068586207
Other General Industrial Equipment	2017	6	15	Other General Industrial Equipment_2017_15	1,605819	1,349	6,17923	5,27694	0,005	0,479	0,441	555,4081	0,17	0,076206897
Other General Industrial Equipment	2017	16	25	Other General Industrial Equipment_2017_25	1,605819	1,349	6,17923	5,27694	0,005	0,479	0,441	555,4081	0,17	0,076206897
Other General Industrial Equipment	2017	26	50	Other General Industrial Equipment_2017_50	1,605819	1,349	6,17923	5,27694	0,005	0,479	0,441	555,4081	0,17	0,076206897
Other General Industrial Equipment	2017	51	120	Other General Industrial Equipment_2017_120	0,785454	0,66	3,99811	5,72138	0,005	0,47	0,433	496,1109	0,152	0,068137931
Other General Industrial Equipment	2017	121	175	Other General Industrial Equipment_2017_175	0,520155	0,437	3,39928	4,53359	0,005	0,25	0,23	498,0641	0,153	0,068586207
Other General Industrial Equipment	2017	176	250	Other General Industrial Equipment_2017_250	0,489435	0,411	1,78	5,02246	0,005	0,199	0,183	499,5133	0,153	0,068586207
Other General Industrial Equipment	2017	251	500	Other General Industrial Equipment_2017_500	0,397215	0,334	2,36453	3,9491	0,005	0,152	0,14	499,2028	0,153	0,068586207
Other General Industrial Equipment	2017	501	750	Other General Industrial Equipment_2017_750	0,260833	0,219	1,48016	2,59187	0,005	0,086	0,079	499,7673	0,153	0,068586207
Other General Industrial Equipment	2017	751	1000	Other General Industrial Equipment_2017_1000	0,29828	0,251	1,05719	4,7865	0,005	0,114	0,105	498,2798	0,153	0,068586207
Other General Industrial Equipment	2018	6	15	Other General Industrial Equipment_2018_15	1,373834	1,154	5,82717	4,97857	0,005	0,414	0,381	546,6385	0,17	0,076206897
Other General Industrial Equipment	2018	16	25	Other General Industrial Equipment_2018_25	1,373834	1,154	5,82717	4,97857	0,005	0,414	0,381	546,6385	0,17	0,076206897
Other General Industrial Equipment	2018	26	50	Other General Industrial Equipment_2018_50	1,373834	1,154	5,82717	4,97857	0,005	0,414	0,381	546,6385	0,17	0,076206897
Other General Industrial Equipment	2018	51	120	Other General Industrial Equipment_2018_120	0,663253	0,557	3,87633	4,95455	0,005	0,392	0,36	488,2775	0,152	0,068137931
Other General Industrial Equipment	2018	121	175	Other General Industrial Equipment_2018_175	0,377931	0,318	3,23662	3,23673	0,005	0,172	0,158	490,1999	0,153	0,068586207
Other General Industrial Equipment	2018	176	250	Other General Industrial Equipment_2018_250	0,360768	0,303	1,45525	3,64819	0,005	0,135	0,124	491,6263	0,153	0,068586207
Other General Industrial Equipment	2018	251	500	Other General Industrial Equipment_2018_500	0,301755	0,254	1,58301	2,90735	0,005	0,104	0,095	491,3207	0,153	0,068586207
Other General Industrial Equipment	2018	501	750	Other General Industrial Equipment_2018_750	0,257602	0,216	1,48303	2,41933	0,005	0,083	0,076	491,8763	0,153	0,068586207
Other General Industrial Equipment	2018	751	1000	Other General Industrial Equipment_2018_1000	0,306245	0,257	1,06646	4,81007	0,005	0,116	0,107	490,4122	0,153	0,068586207
Other General Industrial Equipment	2019	6	15	Other General Industrial Equipment_2019_15	1,240314	1,042	5,66186	4,80683	0,005	0,374	0,344	537,8689	0,17	0,076206897
Other General Industrial Equipment	2019	16	25	Other General Industrial Equipment_2019_25	1,240314	1,042	5,66186	4,80683	0,005	0,374	0,344	537,8689	0,17	0,076206897
Other General Industrial Equipment	2019	26	50	Other General Industrial Equipment_2019_50	1,240314	1,042	5,66186	4,80683	0,005	0,374	0,344	537,8689	0,17	0,076206897
Other General Industrial Equipment	2019	51	120	Other General Industrial Equipment_2019_120	0,594634	0,5	3,82128	4,49674	0,005	0,343	0,315	480,4442	0,152	0,068137931
Other General Industrial Equipment	2019	121	175	Other General Industrial Equipment_2019_175	0,359068	0,302	3,24129	2,99891	0,005	0,156	0,144	482,3357	0,153	0,068586207
Other General Industrial Equipment	2019	176	250	Other General Industrial Equipment_2019_250	0,307665	0,259	1,29893	3,01996	0,005	0,106	0,097	483,7392	0,153	0,068586207
Other General Industrial Equipment	2019	251	500	Other General Industrial Equipment_2019_500	0,283854	0,239	1,56115	2,57531	0,005	0,092	0,085	483,4385	0,153	0,068586207
Other General Industrial Equipment	2019	501	750	Other General Industrial Equipment_2019_750	0,236758	0,199	1,47441	2,11518	0,005	0,076	0,07	483,9852	0,153	0,068586207
Other General Industrial Equipment	2019	751	1000	Other General Industrial Equipment_2019_1000	0,31421	0,264	1,07573	4,83364	0,005	0,117	0,108	482,5446	0,153	0,068586207
Other General Industrial Equipment	2020	6	15	Other General Industrial Equipment_2020_15	1,125869	0,946	5,50397	4,62219	0,005	0,334	0,307	526,1761	0,17	0,076206897
Other General Industrial Equipment	2020	16	25	Other General Industrial Equipment_2020_25	1,125869	0,946	5,50397	4,62219	0,005	0,334	0,307	526,1761	0,17	0,076206897
Other General Industrial Equipment	2020	26	50	Other General Industrial Equipment_2020_50	1,125869	0,946	5,50397	4,62219	0,005	0,334	0,307	526,1761	0,17	0,076206897
Other General Industrial Equipment	2020	51	120	Other General Industrial Equipment_2020_120	0,53075	0,446	3,77073	4,06079	0,005	0,296	0,272	469,9998	0,152	0,068137931
Other General Industrial Equipment	2020	121	175	Other General Industrial Equipment_2020_175	0,319281	0,268	3,22922	2,57503	0,005	0,135	0,124	471,8502	0,153	0,068586207
Other General Industrial Equipment	2020	176	250	Other General Industrial Equipment_2020_250	0,281815	0,237	1,23914	2,66782	0,005	0,09	0,083	473,2231	0,153	0,068586207
Other General Industrial Equipment	2020	251	500	Other General Industrial Equipment_2020_500	0,247036	0,208	1,34424	2,06187	0,005	0,072	0,067	472,929	0,153	0,068586207
Other General Industrial Equipment	2020	501	750	Other General Industrial Equipment_2020_750	0,207847	0,175	1,46184	1,67591	0,005	0,062	0,057	473,4638	0,153	0,068586207
Other General Industrial Equipment	2020	751	1000	Other General Industrial Equipment_2020_1000	0,322174	0,271	1,085	4,85721	0,005	0,119	0,109	472,0545	0,153	0,068586207
Other General Industrial Equipment	2021	6	15	Other General Industrial Equipment_2021_15	0,989462	0,831	5,31354	4,42532	0,005	0,289	0,266	526,1761	0,17	0,076206897
Other General Industrial Equipment	2021	16	25	Other General Industrial Equipment_2021_25	0,989462	0,831	5,31354	4,42532	0,005	0,289	0,266	526,1761	0,17	0,076206897
Other General Industrial Equipment	2021	26	50	Other General Industrial Equipment_2021_50	0,989462	0,831	5,31354	4,42532	0,005	0,289	0,266	526,1761	0,17	0,076206897
Other General Industrial Equipment	2021	51	120	Other General Industrial Equipment_2021_120	0,480398	0,404	3,74029	3,7177	0,005	0,256	0,235	469,9998	0,152	0,068137931
Other General Industrial Equipment	2021	121	175	Other General Industrial Equipment_2021_175	0,302394	0,254	3,23421	2,34745	0,005	0,121	0,111	471,8502	0,153	0,068586207
Other General Industrial Equipment	2021	176	250	Other General Industrial Equipment_2021_250	0,242448	0,204	1,17138	2,0939	0,005	0,07	0,064	473,2231	0,153	0,068586207
Other General Industrial Equipment	2021	251	500	Other General Industrial Equipment_2021_500	0,232592	0,195	1,32956	1,79624	0,005	0,064	0,059	472,929	0,153	0,068586207
Other General Industrial Equipment	2021	501	750	Other General Industrial Equipment_2021_750	0,197551	0,166	1,46305	1,38672	0,005	0,054	0,05	473,4638	0,153	0,068586207
Other General Industrial Equipment	2021	751	1000	Other General Industrial Equipment_2021_1000	0,328625	0,276	1,09291	4,87557	0,005	0,12	0,11	472,0545	0,153	0,068586207
Other General Industrial Equipment	2022	6	15	Other General Industrial Equipment_2022_15	0,835231	0,702	5,07591	4,19687	0,005	0,238	0,219	526,1761	0,17	0,076206897
Other General Industrial Equipment	2022	16	25	Other General Industrial Equipment_2022_25	0,835231	0,702	5,07591	4,19687	0,005	0,238	0,219	526,1761	0,17	0,076206897
Other General Industrial Equipment	2022	26	50	Other General Industrial Equipment_2022_50	0,835231	0,702	5,07591	4,19687	0,005	0,238	0,219	526,1761	0,17	0,076206897
Other General Industrial Equipment	2022	51	120	Other General Industrial Equipment_2022_120	0,403101	0,339	3,66821	3,19968	0,005	0,199	0,183	469,9998	0,152	0,068137931
Other General Industrial Equipment	2022	121	175	Other General Industrial Equipment_2022_175	0,289798	0,244	3,23346	2,14959	0,005	0,111	0,102	471,8502	0,153	0,068586207
Other General Industrial Equipment	2022	176	250	Other General Industrial Equipment_2022_250	0,222216	0,187	1,13752	1,75874	0,005	0,057	0,052	473,2231	0,153	0,068586207
Other General Industrial Equipment	2022	251	500	Other General Industrial Equipment_2022_500	0,208015	0,175	1,17139	1,43348	0,005	0,05	0,046	472,929	0,153	0,068586207
Other General Industrial Equipment	2022	501	750	Other General Industrial Equipment_2022_750	0,177285	0,149	1,45658	1,06247	0,005	0,046	0,042	473,4638	0,153	0,068586207
Other General Industrial Equipment	2022	751	1000	Other General Industrial Equipment_2022_1000	0,223076	0,187	1,03925	3,942	0,005	0,079	0,073	472,0545	0,153	0,068586207
Other General Industrial Equipment	2023	6	15	Other General Industrial Equipment_2023_15	0,717857	0,603	4,88317	3,99304	0,005	0,194	0,178	526,1761	0,17	0,076206897
Other General Industrial Equipment	2023	16	25	Other General Industrial Equipment_2023_25	0,717857	0,603	4,88317	3,99304	0,005	0,194	0,178	526,1761	0,17	0,076206897

Other General Industrial Equipment	2023	26	50	Other General Industrial Equipment_2023_50	0,717857	0,603	4,88317	3,99304	0,005	0,194	0,178	526,1761	0,17	0,076206897
Other General Industrial Equipment	2023	51	120	Other General Industrial Equipment_2023_120	0,366077	0,308	3,64703	2,92394	0,005	0,168	0,155	469,9998	0,152	0,068137931
Other General Industrial Equipment	2023	121	175	Other General Industrial Equipment_2023_175	0,238568	0,2	3,17453	1,60937	0,005	0,08	0,074	471,8502	0,153	0,068586207
Other General Industrial Equipment	2023	176	250	Other General Industrial Equipment_2023_250	0,214876	0,181	1,14024	1,53043	0,005	0,051	0,047	473,2231	0,153	0,068586207
Other General Industrial Equipment	2023	251	500	Other General Industrial Equipment_2023_500	0,195172	0,164	1,12057	1,25618	0,005	0,043	0,04	472,929	0,153	0,068586207
Other General Industrial Equipment	2023	501	750	Other General Industrial Equipment_2023_750	0,131565	0,111	1,10458	0,62571	0,005	0,023	0,021	473,4638	0,153	0,068586207
Other General Industrial Equipment	2023	751	1000	Other General Industrial Equipment_2023_1000	0,229255	0,193	1,04852	3,95649	0,005	0,08	0,073	472,0545	0,153	0,068586207
Other General Industrial Equipment	2024	6	15	Other General Industrial Equipment_2024_15	0,649743	0,546	4,78022	3,85892	0,005	0,165	0,152	526,1761	0,17	0,076206897
Other General Industrial Equipment	2024	16	25	Other General Industrial Equipment_2024_25	0,649743	0,546	4,78022	3,85892	0,005	0,165	0,152	526,1761	0,17	0,076206897
Other General Industrial Equipment	2024	26	50	Other General Industrial Equipment_2024_50	0,649743	0,546	4,78022	3,85892	0,005	0,165	0,152	526,1761	0,17	0,076206897
Other General Industrial Equipment	2024	51	120	Other General Industrial Equipment_2024_120	0,341745	0,287	3,63929	2,70778	0,005	0,146	0,134	469,9998	0,152	0,068137931
Other General Industrial Equipment	2024	121	175	Other General Industrial Equipment_2024_175	0,226791	0,191	3,18534	1,44774	0,005	0,073	0,067	471,8502	0,153	0,068586207
Other General Industrial Equipment	2024	176	250	Other General Industrial Equipment_2024_250	0,205547	0,173	1,14124	1,31888	0,005	0,046	0,042	473,2231	0,153	0,068586207
Other General Industrial Equipment	2024	251	500	Other General Industrial Equipment_2024_500	0,187509	0,158	1,1102	1,15288	0,005	0,04	0,036	472,929	0,153	0,068586207
Other General Industrial Equipment	2024	501	750	Other General Industrial Equipment_2024_750	0,137014	0,115	1,11228	0,62782	0,005	0,023	0,021	473,4638	0,153	0,068586207
Other General Industrial Equipment	2024	751	1000	Other General Industrial Equipment_2024_1000	0,235434	0,198	1,05779	3,97098	0,005	0,08	0,074	472,0545	0,153	0,068586207
Other General Industrial Equipment	2025	6	15	Other General Industrial Equipment_2025_15	0,585572	0,492	4,67981	3,71721	0,005	0,136	0,125	526,1761	0,17	0,076206897
Other General Industrial Equipment	2025	16	25	Other General Industrial Equipment_2025_25	0,585572	0,492	4,67981	3,71721	0,005	0,136	0,125	526,1761	0,17	0,076206897
Other General Industrial Equipment	2025	26	50	Other General Industrial Equipment_2025_50	0,585572	0,492	4,67981	3,71721	0,005	0,136	0,125	526,1761	0,17	0,076206897
Other General Industrial Equipment	2025	51	120	Other General Industrial Equipment_2025_120	0,306396	0,257	3,61204	2,43889	0,005	0,118	0,109	469,9998	0,152	0,068137931
Other General Industrial Equipment	2025	121	175	Other General Industrial Equipment_2025_175	0,224974	0,189	3,20434	1,36379	0,005	0,07	0,065	471,8502	0,153	0,068586207
Other General Industrial Equipment	2025	176	250	Other General Industrial Equipment_2025_250	0,184121	0,155	1,13176	1,02801	0,005	0,036	0,033	473,2231	0,153	0,068586207
Other General Industrial Equipment	2025	251	500	Other General Industrial Equipment_2025_500	0,180295	0,151	1,10932	1,05334	0,005	0,035	0,032	472,929	0,153	0,068586207
Other General Industrial Equipment	2025	501	750	Other General Industrial Equipment_2025_750	0,139282	0,117	1,1152	0,629	0,005	0,023	0,021	473,4638	0,153	0,068586207
Other General Industrial Equipment	2025	751	1000	Other General Industrial Equipment_2025_1000	0,241613	0,203	1,06706	3,98546	0,005	0,081	0,074	472,0545	0,153	0,068586207
Other General Industrial Equipment	2030	6	15	Other General Industrial Equipment_2030_15	1,393	0,589	3,469	4,142	0,008	0,161	0,161	568,299	0,053	0,023758621
Other General Industrial Equipment	2030	16	25	Other General Industrial Equipment_2030_25	3,889	0,685	2,339	4,332	0,007	0,161	0,161	568,299	0,061	0,027344828
Other General Industrial Equipment	2030	26	50	Other General Industrial Equipment_2030_50	4,896	0,609	5,299	3,46	0,007	0,048	0,048	568,299	0,054	0,024206897
Other General Industrial Equipment	2030	51	120	Other General Industrial Equipment_2030_120	7,091	0,309	3,802	1,766	0,006	0,043	0,043	568,299	0,027	0,012103448
Other General Industrial Equipment	2030	121	175	Other General Industrial Equipment_2030_175	7,93	0,223	3,357	0,641	0,006	0,028	0,028	568,299	0,02	0,008965517
Other General Industrial Equipment	2030	176	250	Other General Industrial Equipment_2030_250	10,485	0,209	1,143	0,536	0,006	0,018	0,018	568,299	0,018	0,008068966
Other General Industrial Equipment	2030	251	500	Other General Industrial Equipment_2030_500	20,447	0,208	1,087	0,506	0,005	0,018	0,018	568,299	0,018	0,008068966
Other General Industrial Equipment	2030	501	750	Other General Industrial Equipment_2030_750	33,725	0,208	1,087	0,512	0,005	0,018	0,018	568,299	0,018	0,008068966
Other General Industrial Equipment	2030	751	1000	Other General Industrial Equipment_2030_1000	44,002	0,212	1,088	2,66	0,005	0,035	0,035	568,299	0,019	0,008517241
Other General Industrial Equipment	2035	6	15	Other General Industrial Equipment_2035_15	1,393	0,589	3,469	4,142	0,008	0,161	0,161	568,299	0,053	0,023758621
Other General Industrial Equipment	2035	16	25	Other General Industrial Equipment_2035_25	3,889	0,685	2,339	4,332	0,007	0,161	0,161	568,299	0,061	0,027344828
Other General Industrial Equipment	2035	26	50	Other General Industrial Equipment_2035_50	4,535	0,564	5,255	3,334	0,007	0,025	0,025	568,299	0,05	0,022413793
Other General Industrial Equipment	2035	51	120	Other General Industrial Equipment_2035_120	6,486	0,282	3,794	1,567	0,006	0,022	0,022	568,3	0,025	0,011206897
Other General Industrial Equipment	2035	121	175	Other General Industrial Equipment_2035_175	7,079	0,199	3,355	0,399	0,006	0,016	0,016	568,3	0,018	0,008068966
Other General Industrial Equipment	2035	176	250	Other General Industrial Equipment_2035_250	9,803	0,195	1,143	0,355	0,006	0,013	0,013	568,299	0,017	0,00762069
Other General Industrial Equipment	2035	251	500	Other General Industrial Equipment_2035_500	19,187	0,195	1,087	0,351	0,005	0,013	0,013	568,299	0,017	0,00762069
Other General Industrial Equipment	2035	501	750	Other General Industrial Equipment_2035_750	31,624	0,195	1,087	0,351	0,005	0,013	0,013	568,299	0,017	0,00762069
Other General Industrial Equipment	2035	751	1000	Other General Industrial Equipment_2035_1000	40,723	0,196	1,087	2,532	0,005	0,028	0,028	568,299	0,017	0,00762069
Other General Industrial Equipment	2040	6	15	Other General Industrial Equipment_2040_15	1,393	0,589	3,47	4,142	0,008	0,161	0,161	568,299	0,053	0,023758621
Other General Industrial Equipment	2040	16	25	Other General Industrial Equipment_2040_25	3,889	0,685	2,339	4,332	0,007	0,161	0,161	568,299	0,061	0,027344828
Other General Industrial Equipment	2040	26	50	Other General Industrial Equipment_2040_50	4,521	0,562	5,257	3,283	0,007	0,019	0,019	568,299	0,05	0,022413793
Other General Industrial Equipment	2040	51	120	Other General Industrial Equipment_2040_120	6,373	0,277	3,794	1,506	0,006	0,017	0,017	568,299	0,025	0,011206897
Other General Industrial Equipment	2040	121	175	Other General Industrial Equipment_2040_175	6,806	0,191	3,356	0,315	0,006	0,012	0,012	568,299	0,017	0,00762069
Other General Industrial Equipment	2040	176	250	Other General Industrial Equipment_2040_250	9,551	0,19	1,143	0,299	0,006	0,011	0,011	568,299	0,017	0,00762069
Other General Industrial Equipment	2040	251	500	Other General Industrial Equipment_2040_500	18,696	0,19	1,087	0,299	0,005	0,011	0,011	568,299	0,017	0,00762069
Other General Industrial Equipment	2040	501	750	Other General Industrial Equipment_2040_750	30,815	0,19	1,087	0,299	0,005	0,011	0,011	568,299	0,017	0,00762069
Other General Industrial Equipment	2040	751	1000	Other General Industrial Equipment_2040_1000	39,521	0,191	1,087	2,5	0,005	0,025	0,025	568,299	0,017	0,00762069
Other Material Handling Equipment	1990	26	50	Other Material Handling Equipment_1990_50	12,278	4,763	9,649	7,932	0,692	1,252	1,252	568,3	0,429	0,192310345
Other Material Handling Equipment	1990	51	120	Other Material Handling Equipment_1990_120	12,096	2,346	5,692	14,896	0,628	1,317	1,317	568,299	0,211	0,094586207
Other Material Handling Equipment	1990	121	175	Other Material Handling Equipment_1990_175	16,59	1,599	5,041	13,377	0,602	0,872	0,872	568,299	0,144	0,064551724
Other Material Handling Equipment	1990	176	250	Other Material Handling Equipment_1990_250	19,708	1,599	5,041	13,377	0,602	0,872	0,872	568,3	0,144	0,064551724
Other Material Handling Equipment	1990	251	500	Other Material Handling Equipment_1990_500	23,083	1,417	11,046	12,702	0,525	0,75	0,75	568,299	0,127	0,056931034
Other Material Handling Equipment	1990	1001	9999	Other Material Handling Equipment_1990_9999	88,844	1,41	11,046	12,702	0,525	0,741	0,741	568,3	0,127	0,056931034
Other Material Handling Equipment	2000	26	50	Other Material Handling Equipment_2000_50	11,414	4,428	9,121	7,068	0,065	0,925	0,925	568,299	0,399	0,178862069
Other Material Handling Equipment	2000	51	120	Other Material Handling Equipment_2000_120	9,647	1,871	4,712	10,623	0,059	0,901	0,901	568,299	0,168	0,075310345
Other Material Handling Equipment	2000	121	175	Other Material Handling Equipment_2000_175	13	1,253	3,836	9,648	0,057	0,531	0,531	568,299	0,113	0,050655172
Other Material Handling Equipment	2000	176	250	Other Material Handling Equipment_2000_250	12,957	1,051	3,061	9,289	0,057	0,435	0,435	568,3	0,094	0,042137931
Other Material Handling Equipment	2000	251	500	Other Material Handling Equipment_2000_500	15,5	0,951	5,171	8,836	0,049	0,383	0,383	568,299	0,085	0,038103448
Other Material Handling Equipment	2000	1001	9999	Other Material Handling Equipment_2000_9999	65,006	1,031	5,779	9,45	0,049	0,384	0,384	568,299	0,093	0,041689655
Other Material Handling Equipment	2005	26	50	Other Material Handling Equipment_2005_50	10,467	4,06	8,646	6,65	0,065	0,878	0,878	568,299	0,366	0,164068966
Other Material Handling Equipment	2005	51	120	Other Material Handling Equipment_2005_120	8,426	1,634	4,393	9,001	0,059	0,857	0,857	568,3	0,147	0,065896552
Other Material Handling Equipment	2005	121	175	Other Material Handling Equipment_2005_175	11,141	1,073	3,493	8,235	0,057	0,473	0,473	568,299	0,096	0,043034483
Other Material Handling Equipment	2005	176	250	Other Material Handling Equipment_2005_250	9,335	0,757	2,058	7,76	0,057	0,299	0,299	568,299	0,068	0,030482759
Other Material Handling Equipment	2005	251	500	Other Material Handling Equipment_2005_500	10,914	0,67	2,676	7,071	0,049	0,268	0,268	568,299	0,06	0,026896552
Other Material Handling Equipment	2005	1001	9999	Other Material Handling Equipment_2005_9999	50,601	0,803	3,267	8,291	0,049	0,278	0,278	568,299	0,072	0,032275862
Other Material Handling Equipment	2010	26	50	Other Material Handling Equipment_2010_50	2,513226	2,112	7,14242	6,11921	0,005	0,673	0,619	581,8987	0,169	0,075758621
Other Material Handling Equipment	2010	51	120	Other Material Handling Equipment_2010_120	0,880333	0,74	3,91836	6,86036	0,005	0,55	0,506	526,2094	0,153	0,068586207
Other Material Handling Equipment	2010	121	175	Other Material Handling Equipment_2010_175	0,703937	0,592	3,45939	6,62945	0,005	0,364	0,335	524,6881	0,153	0,068586207

Other Material Handling Equipment	2010	176	250	Other Material Handling Equipment_2010_250	0,639111	0,537	2,2178	7,05748	0,005	0,292	0,269	523,8689	0,152	0,068137931
Other Material Handling Equipment	2010	251	500	Other Material Handling Equipment_2010_500	0,474577	0,399	2,89546	5,53948	0,005	0,225	0,207	522,5525	0,152	0,068137931
Other Material Handling Equipment	2010	1001	9999	Other Material Handling Equipment_2010_9999	0,19342	0,163	0,96514	4,31467	0,005	0,1	0,092	524,505	0,153	0,068586207
Other Material Handling Equipment	2011	26	50	Other Material Handling Equipment_2011_50	2,357707	1,981	6,95209	6,0264	0,005	0,644	0,593	580,4439	0,169	0,075758621
Other Material Handling Equipment	2011	51	120	Other Material Handling Equipment_2011_120	0,835489	0,702	3,89742	6,54765	0,005	0,527	0,485	524,8938	0,153	0,068586207
Other Material Handling Equipment	2011	121	175	Other Material Handling Equipment_2011_175	0,695125	0,584	3,45599	6,48588	0,005	0,36	0,331	523,3764	0,153	0,068586207
Other Material Handling Equipment	2011	176	250	Other Material Handling Equipment_2011_250	0,63663	0,535	2,18416	6,98965	0,005	0,288	0,265	522,5592	0,152	0,068137931
Other Material Handling Equipment	2011	251	500	Other Material Handling Equipment_2011_500	0,474482	0,399	2,78574	5,43165	0,005	0,221	0,203	521,2461	0,152	0,068137931
Other Material Handling Equipment	2011	1001	9999	Other Material Handling Equipment_2011_9999	0,210247	0,177	0,97804	4,35542	0,005	0,103	0,095	523,1938	0,153	0,068586207
Other Material Handling Equipment	2012	26	50	Other Material Handling Equipment_2012_50	2,238738	1,881	6,81597	5,92499	0,005	0,62	0,57	578,9892	0,169	0,075758621
Other Material Handling Equipment	2012	51	120	Other Material Handling Equipment_2012_120	0,817068	0,687	3,90414	6,36758	0,005	0,516	0,475	523,5783	0,153	0,068586207
Other Material Handling Equipment	2012	121	175	Other Material Handling Equipment_2012_175	0,692769	0,582	3,47827	6,40913	0,005	0,357	0,328	522,0647	0,153	0,068586207
Other Material Handling Equipment	2012	176	250	Other Material Handling Equipment_2012_250	0,646463	0,543	2,19514	7,02565	0,005	0,29	0,267	521,2496	0,152	0,068137931
Other Material Handling Equipment	2012	251	500	Other Material Handling Equipment_2012_500	0,470349	0,395	2,61135	5,30246	0,005	0,214	0,197	519,9397	0,152	0,068137931
Other Material Handling Equipment	2012	1001	9999	Other Material Handling Equipment_2012_9999	0,227073	0,191	0,99094	4,39617	0,005	0,106	0,098	521,8825	0,153	0,068586207
Other Material Handling Equipment	2013	26	50	Other Material Handling Equipment_2013_50	2,105942	1,77	6,66457	5,85572	0,005	0,596	0,548	576,0797	0,169	0,075758621
Other Material Handling Equipment	2013	51	120	Other Material Handling Equipment_2013_120	0,724086	0,608	3,82317	5,76277	0,005	0,447	0,411	520,9473	0,153	0,068586207
Other Material Handling Equipment	2013	121	175	Other Material Handling Equipment_2013_175	0,665996	0,56	3,43613	6,15356	0,005	0,333	0,306	519,4412	0,153	0,068586207
Other Material Handling Equipment	2013	176	250	Other Material Handling Equipment_2013_250	0,634565	0,533	2,16882	6,82184	0,005	0,281	0,259	518,6302	0,152	0,068137931
Other Material Handling Equipment	2013	251	500	Other Material Handling Equipment_2013_500	0,438071	0,368	2,33558	4,87099	0,005	0,195	0,179	517,327	0,152	0,068137931
Other Material Handling Equipment	2013	1001	9999	Other Material Handling Equipment_2013_9999	0,2439	0,205	1,00384	4,43692	0,005	0,11	0,101	519,26	0,153	0,068586207
Other Material Handling Equipment	2014	26	50	Other Material Handling Equipment_2014_50	2,017454	1,695	6,58988	5,75119	0,005	0,575	0,529	573,1702	0,169	0,075758621
Other Material Handling Equipment	2014	51	120	Other Material Handling Equipment_2014_120	0,66398	0,558	3,77914	5,37202	0,005	0,412	0,379	518,3162	0,153	0,068586207
Other Material Handling Equipment	2014	121	175	Other Material Handling Equipment_2014_175	0,628738	0,528	3,43064	5,79759	0,005	0,313	0,288	516,8178	0,153	0,068586207
Other Material Handling Equipment	2014	176	250	Other Material Handling Equipment_2014_250	0,565441	0,475	1,93605	6,17254	0,005	0,242	0,223	516,0109	0,152	0,068137931
Other Material Handling Equipment	2014	251	500	Other Material Handling Equipment_2014_500	0,394393	0,331	1,92674	4,35658	0,005	0,169	0,155	514,7142	0,152	0,068137931
Other Material Handling Equipment	2014	1001	9999	Other Material Handling Equipment_2014_9999	0,168044	0,141	0,97804	3,4363	0,005	0,066	0,061	516,6375	0,153	0,068586207
Other Material Handling Equipment	2015	26	50	Other Material Handling Equipment_2015_50	2,062891	1,733	6,75642	5,7994	0,005	0,586	0,539	567,3512	0,169	0,075758621
Other Material Handling Equipment	2015	51	120	Other Material Handling Equipment_2015_120	0,628094	0,528	3,75787	4,98312	0,005	0,383	0,352	513,0541	0,153	0,068586207
Other Material Handling Equipment	2015	121	175	Other Material Handling Equipment_2015_175	0,624881	0,525	3,43301	5,6445	0,005	0,306	0,282	511,5709	0,153	0,068586207
Other Material Handling Equipment	2015	176	250	Other Material Handling Equipment_2015_250	0,503855	0,423	1,74236	5,5323	0,005	0,207	0,191	510,7722	0,152	0,068137931
Other Material Handling Equipment	2015	251	500	Other Material Handling Equipment_2015_500	0,396328	0,333	1,91761	4,27243	0,005	0,166	0,152	509,4887	0,152	0,068137931
Other Material Handling Equipment	2015	1001	9999	Other Material Handling Equipment_2015_9999	0,1762	0,148	0,98449	3,45753	0,005	0,068	0,063	511,3924	0,153	0,068586207
Other Material Handling Equipment	2016	26	50	Other Material Handling Equipment_2016_50	2,100647	1,765	6,89161	5,80157	0,005	0,593	0,546	561,5322	0,169	0,075758621
Other Material Handling Equipment	2016	51	120	Other Material Handling Equipment_2016_120	0,611519	0,514	3,76606	4,79843	0,005	0,367	0,338	507,792	0,153	0,068586207
Other Material Handling Equipment	2016	121	175	Other Material Handling Equipment_2016_175	0,581687	0,489	3,41823	5,21152	0,005	0,279	0,257	506,324	0,153	0,068586207
Other Material Handling Equipment	2016	176	250	Other Material Handling Equipment_2016_250	0,474176	0,398	1,64277	5,19629	0,005	0,189	0,174	505,5335	0,152	0,068137931
Other Material Handling Equipment	2016	251	500	Other Material Handling Equipment_2016_500	0,384009	0,323	1,87077	4,05322	0,005	0,156	0,143	504,2631	0,152	0,068137931
Other Material Handling Equipment	2016	1001	9999	Other Material Handling Equipment_2016_9999	0,188654	0,159	0,99739	3,48884	0,005	0,07	0,065	506,1474	0,153	0,068586207
Other Material Handling Equipment	2017	26	50	Other Material Handling Equipment_2017_50	1,922269	1,615	6,63527	5,57447	0,005	0,546	0,502	552,8037	0,169	0,075758621
Other Material Handling Equipment	2017	51	120	Other Material Handling Equipment_2017_120	0,580499	0,488	3,75788	4,56113	0,005	0,341	0,314	499,8989	0,153	0,068586207
Other Material Handling Equipment	2017	121	175	Other Material Handling Equipment_2017_175	0,508007	0,427	3,35117	4,48809	0,005	0,238	0,219	498,4537	0,153	0,068586207
Other Material Handling Equipment	2017	176	250	Other Material Handling Equipment_2017_250	0,42771	0,359	1,51249	4,70454	0,005	0,163	0,15	497,6755	0,152	0,068137931
Other Material Handling Equipment	2017	251	500	Other Material Handling Equipment_2017_500	0,386945	0,325	1,86256	3,9709	0,005	0,154	0,141	496,4249	0,152	0,068137931
Other Material Handling Equipment	2017	1001	9999	Other Material Handling Equipment_2017_9999	0,201109	0,169	1,01029	3,52015	0,005	0,072	0,066	498,2798	0,153	0,068586207
Other Material Handling Equipment	2018	26	50	Other Material Handling Equipment_2018_50	1,534491	1,289	6,06083	5,18225	0,005	0,457	0,42	544,0753	0,169	0,075758621
Other Material Handling Equipment	2018	51	120	Other Material Handling Equipment_2018_120	0,484553	0,407	3,67482	3,9436	0,005	0,271	0,249	492,0058	0,153	0,068586207
Other Material Handling Equipment	2018	121	175	Other Material Handling Equipment_2018_175	0,38852	0,326	3,21803	3,33231	0,005	0,173	0,159	490,5834	0,153	0,068586207
Other Material Handling Equipment	2018	176	250	Other Material Handling Equipment_2018_250	0,376195	0,316	1,3884	4,09187	0,005	0,135	0,124	489,8174	0,152	0,068137931
Other Material Handling Equipment	2018	251	500	Other Material Handling Equipment_2018_500	0,352182	0,296	1,63271	3,52439	0,005	0,133	0,123	488,5866	0,152	0,068137931
Other Material Handling Equipment	2018	1001	9999	Other Material Handling Equipment_2018_9999	0,213564	0,179	1,02319	3,55146	0,005	0,074	0,068	490,4122	0,153	0,068586207
Other Material Handling Equipment	2019	26	50	Other Material Handling Equipment_2019_50	1,5177	1,275	6,13945	5,17904	0,005	0,452	0,416	535,3468	0,169	0,075758621
Other Material Handling Equipment	2019	51	120	Other Material Handling Equipment_2019_120	0,428699	0,36	3,63634	3,56573	0,005	0,231	0,212	484,1126	0,153	0,068586207
Other Material Handling Equipment	2019	121	175	Other Material Handling Equipment_2019_175	0,332757	0,28	3,1852	2,77369	0,005	0,139	0,128	482,7131	0,153	0,068586207
Other Material Handling Equipment	2019	176	250	Other Material Handling Equipment_2019_250	0,357063	0,3	1,34052	3,81716	0,005	0,123	0,113	481,9594	0,152	0,068137931
Other Material Handling Equipment	2019	251	500	Other Material Handling Equipment_2019_500	0,346245	0,291	1,61951	3,37078	0,005	0,128	0,118	480,7483	0,152	0,068137931
Other Material Handling Equipment	2019	1001	9999	Other Material Handling Equipment_2019_9999	0,226018	0,19	1,03609	3,58277	0,005	0,076	0,07	482,5446	0,153	0,068586207
Other Material Handling Equipment	2020	26	50	Other Material Handling Equipment_2020_50	1,481858	1,245	6,1671	5,13925	0,005	0,439	0,404	523,7088	0,169	0,075758621
Other Material Handling Equipment	2020	51	120	Other Material Handling Equipment_2020_120	0,36479	0,307	3,58938	3,10396	0,005	0,182	0,168	473,5884	0,153	0,068586207
Other Material Handling Equipment	2020	121	175	Other Material Handling Equipment_2020_175	0,299922	0,252	3,17089	2,36653	0,005	0,118	0,109	472,2193	0,153	0,068586207
Other Material Handling Equipment	2020	176	250	Other Material Handling Equipment_2020_250	0,346024	0,291	1,31882	3,59889	0,005	0,115	0,106	471,482	0,152	0,068137931
Other Material Handling Equipment	2020	251	500	Other Material Handling Equipment_2020_500	0,336187	0,282	1,52346	3,20974	0,005	0,12	0,11	470,2972	0,152	0,068137931
Other Material Handling Equipment	2020	1001	9999	Other Material Handling Equipment_2020_9999	0,238473	0,2	1,04898	3,61407	0,005	0,078	0,072	472,0545	0,153	0,068586207
Other Material Handling Equipment	2021	26	50	Other Material Handling Equipment_2021_50	1,318509	1,108	5,95956	4,96638	0,005	0,396	0,364	523,7088	0,169	0,075758621
Other Material Handling Equipment	2021	51	120	Other Material Handling Equipment_2021_120	0,349969	0,294	3,60203	2,95622	0,005	0,166	0,152	473,5884	0,153	0,068586207
Other Material Handling Equipment	2021	121	175	Other Material Handling Equipment_2021_175	0,296084	0,249	3,19638	2,24633	0,005	0,114	0,105	472,2193	0,153	0,068586207
Other Material Handling Equipment	2021	176	250	Other Material Handling Equipment_2021_250	0,32063	0,269	1,30911	3,08193	0,005	0,102	0,094	471,482	0,152	0,068137931
Other Material Handling Equipment	2021	251	500	Other Material Handling Equipment_2021_500	0,302407	0,254	1,44188	2,60166	0,005	0,101	0,093	470,2972	0,152	0,068137931
Other Material Handling Equipment	2021	1001	9999	Other Material Handling Equipment_2021_9999	0,086228	0,072	0,97159	2,3179	0,005	0,019	0,018	472,0545	0,153	0,068586207
Other Material Handling Equipment	2022	26	50	Other Material Handling Equipment_2022_50	1,313129	1,103	5,98386	4,92048	0,005	0,385	0,354	523,7088	0,169	0,075758621
Other Material Handling Equipment	2022	51	120	Other Material Handling Equipment_2022_120	0,294157	0,247	3,55673	2,56673	0,005	0,121	0,111	473,5884	0,153	0,068586207
Other Material Handling Equipment	2022	121	175	Other Material Handling Equipment_2022_175	0,268495	0,226	3,17607	1,89383	0,005	0,103	0,095	472,2193	0,153	0,068586207
Other Material Handling Equipment	2022	176	250	Other Material Handling Equipment_2022_250	0,272302	0,229	1,23917	2,42542	0,005	0,083	0,076	471,482	0,152	0,068137931

Other Material Handling Equipment	2022	251	500	Other Material Handling Equipment_2022_500	0,269417	0,226	1,34592	2,06254	0,005	0,083	0,077	470,2972	0,152	0,068137931
Other Material Handling Equipment	2022	1001	9999	Other Material Handling Equipment_2022_9999	0,090526	0,076	0,97804	2,32798	0,005	0,02	0,018	472,0545	0,153	0,068586207
Other Material Handling Equipment	2023	26	50	Other Material Handling Equipment_2023_50	1,203044	1,011	5,75727	4,68435	0,005	0,34	0,313	523,7088	0,169	0,075758621
Other Material Handling Equipment	2023	51	120	Other Material Handling Equipment_2023_120	0,267491	0,225	3,51535	2,29768	0,005	0,104	0,095	473,5884	0,153	0,068586207
Other Material Handling Equipment	2023	121	175	Other Material Handling Equipment_2023_175	0,25813	0,217	3,17066	1,76898	0,005	0,096	0,088	472,2193	0,153	0,068586207
Other Material Handling Equipment	2023	176	250	Other Material Handling Equipment_2023_250	0,246291	0,207	1,20917	2,00366	0,005	0,069	0,064	471,482	0,152	0,068137931
Other Material Handling Equipment	2023	251	500	Other Material Handling Equipment_2023_500	0,258837	0,217	1,34382	1,87023	0,005	0,078	0,072	470,2972	0,152	0,068137931
Other Material Handling Equipment	2023	1001	9999	Other Material Handling Equipment_2023_9999	0,064735	0,054	0,93935	2,26751	0,005	0,018	0,017	472,0545	0,153	0,068586207
Other Material Handling Equipment	2024	26	50	Other Material Handling Equipment_2024_50	1,121754	0,943	5,6693	4,5789	0,005	0,314	0,289	523,7088	0,169	0,075758621
Other Material Handling Equipment	2024	51	120	Other Material Handling Equipment_2024_120	0,262084	0,22	3,51036	2,22162	0,005	0,096	0,089	473,5884	0,153	0,068586207
Other Material Handling Equipment	2024	121	175	Other Material Handling Equipment_2024_175	0,247908	0,208	3,18111	1,63864	0,005	0,088	0,081	472,2193	0,153	0,068586207
Other Material Handling Equipment	2024	176	250	Other Material Handling Equipment_2024_250	0,250036	0,21	1,21822	1,98559	0,005	0,068	0,063	471,482	0,152	0,068137931
Other Material Handling Equipment	2024	251	500	Other Material Handling Equipment_2024_500	0,252116	0,212	1,26223	1,75588	0,005	0,072	0,066	470,2972	0,152	0,068137931
Other Material Handling Equipment	2024	1001	9999	Other Material Handling Equipment_2024_9999	0,069034	0,058	0,9458	2,27759	0,005	0,018	0,017	472,0545	0,153	0,068586207
Other Material Handling Equipment	2025	26	50	Other Material Handling Equipment_2025_50	0,88573	0,744	5,24797	4,23278	0,005	0,239	0,219	523,7088	0,169	0,075758621
Other Material Handling Equipment	2025	51	120	Other Material Handling Equipment_2025_120	0,241784	0,203	3,49652	2,05524	0,005	0,081	0,074	473,5884	0,153	0,068586207
Other Material Handling Equipment	2025	121	175	Other Material Handling Equipment_2025_175	0,225132	0,189	3,1679	1,39583	0,005	0,072	0,067	472,2193	0,153	0,068586207
Other Material Handling Equipment	2025	176	250	Other Material Handling Equipment_2025_250	0,237677	0,2	1,19728	1,77352	0,005	0,06	0,055	471,482	0,152	0,068137931
Other Material Handling Equipment	2025	251	500	Other Material Handling Equipment_2025_500	0,242568	0,204	1,25988	1,60116	0,005	0,067	0,061	470,2972	0,152	0,068137931
Other Material Handling Equipment	2025	1001	9999	Other Material Handling Equipment_2025_9999	0,077631	0,065	0,9587	2,29775	0,005	0,019	0,017	472,0545	0,153	0,068586207
Other Material Handling Equipment	2030	26	50	Other Material Handling Equipment_2030_50	1,542	0,598	5,237	3,447	0,007	0,048	0,048	568,299	0,053	0,023758621
Other Material Handling Equipment	2030	51	120	Other Material Handling Equipment_2030_120	1,57	0,304	3,784	1,762	0,006	0,043	0,043	568,299	0,027	0,012103448
Other Material Handling Equipment	2030	121	175	Other Material Handling Equipment_2030_175	2,287	0,22	3,341	0,64	0,006	0,028	0,028	568,299	0,019	0,008517241
Other Material Handling Equipment	2030	176	250	Other Material Handling Equipment_2030_250	2,539	0,206	1,138	0,535	0,006	0,018	0,018	568,299	0,018	0,008068966
Other Material Handling Equipment	2030	251	500	Other Material Handling Equipment_2030_500	3,342	0,205	1,083	0,505	0,005	0,018	0,018	568,299	0,018	0,008068966
Other Material Handling Equipment	2030	1001	9999	Other Material Handling Equipment_2030_9999	13,763	0,218	1,084	2,653	0,005	0,035	0,035	568,299	0,019	0,008517241
Other Material Handling Equipment	2035	26	50	Other Material Handling Equipment_2035_50	1,425	0,552	5,189	3,321	0,007	0,025	0,025	568,299	0,049	0,021965517
Other Material Handling Equipment	2035	51	120	Other Material Handling Equipment_2035_120	1,432	0,277	3,774	1,563	0,006	0,022	0,022	568,299	0,025	0,011206897
Other Material Handling Equipment	2035	121	175	Other Material Handling Equipment_2035_175	2,036	0,196	3,338	0,398	0,006	0,016	0,016	568,299	0,017	0,00762069
Other Material Handling Equipment	2035	176	250	Other Material Handling Equipment_2035_250	2,369	0,192	1,137	0,354	0,006	0,013	0,013	568,299	0,017	0,00762069
Other Material Handling Equipment	2035	251	500	Other Material Handling Equipment_2035_500	3,13	0,192	1,082	0,35	0,005	0,013	0,013	568,299	0,017	0,00762069
Other Material Handling Equipment	2035	1001	9999	Other Material Handling Equipment_2035_9999	12,454	0,197	1,082	2,525	0,005	0,027	0,027	568,299	0,017	0,00762069
Other Material Handling Equipment	2040	26	50	Other Material Handling Equipment_2040_50	1,42	0,551	5,191	3,269	0,007	0,018	0,018	568,299	0,049	0,021965517
Other Material Handling Equipment	2040	51	120	Other Material Handling Equipment_2040_120	1,407	0,272	3,775	1,502	0,006	0,017	0,017	568,3	0,024	0,010758621
Other Material Handling Equipment	2040	121	175	Other Material Handling Equipment_2040_175	1,956	0,188	3,339	0,314	0,006	0,012	0,012	568,299	0,017	0,00762069
Other Material Handling Equipment	2040	176	250	Other Material Handling Equipment_2040_250	2,307	0,187	1,137	0,298	0,006	0,011	0,011	568,299	0,016	0,007172414
Other Material Handling Equipment	2040	251	500	Other Material Handling Equipment_2040_500	3,048	0,187	1,082	0,298	0,005	0,011	0,011	568,299	0,016	0,007172414
Other Material Handling Equipment	2040	1001	9999	Other Material Handling Equipment_2040_9999	11,917	0,189	1,082	2,493	0,005	0,025	0,025	568,3	0,017	0,00762069
Pavers	1990	16	25	Pavers_1990_25	5,971	2,213	4,999	6,919	0,855	0,741	0,741	568,299	0,199	0,089206897
Pavers	1990	26	50	Pavers_1990_50	19,405	4,794	9,701	7,946	0,871	1,268	1,268	568,299	0,432	0,193655172
Pavers	1990	51	120	Pavers_1990_120	23,749	2,373	5,748	15,062	0,791	1,339	1,339	568,299	0,214	0,095931034
Pavers	1990	121	175	Pavers_1990_175	33,808	1,822	5,135	14,503	0,758	1,01	1,01	568,3	0,164	0,073517241
Pavers	1990	176	250	Pavers_1990_250	51,225	1,822	5,135	14,503	0,758	1,01	1,01	568,299	0,164	0,073517241
Pavers	1990	251	500	Pavers_1990_500	54,32	1,61	11,305	13,755	0,662	0,864	0,864	568,3	0,145	0,065
Pavers	2000	16	25	Pavers_2000_25	5,517	2,044	4,689	6,391	0,065	0,569	0,569	568,299	0,184	0,082482759
Pavers	2000	26	50	Pavers_2000_50	18,072	4,464	9,175	7,116	0,066	0,93	0,93	568,299	0,402	0,180206897
Pavers	2000	51	120	Pavers_2000_120	19,415	1,94	4,853	11,121	0,06	0,916	0,916	568,299	0,175	0,078448276
Pavers	2000	121	175	Pavers_2000_175	24,566	1,324	4,022	10,172	0,057	0,558	0,558	568,299	0,119	0,053344828
Pavers	2000	176	250	Pavers_2000_250	33,03	1,175	3,443	9,909	0,057	0,488	0,488	568,299	0,106	0,047517241
Pavers	2000	251	500	Pavers_2000_500	35,713	1,058	6,242	9,422	0,05	0,426	0,426	568,299	0,095	0,042586207
Pavers	2005	16	25	Pavers_2005_25	3,746	1,388	3,497	5,819	0,065	0,444	0,444	568,299	0,125	0,056034483
Pavers	2005	26	50	Pavers_2005_50	16,699	4,125	8,722	6,746	0,066	0,883	0,883	568,299	0,372	0,166758621
Pavers	2005	51	120	Pavers_2005_120	17,345	1,733	4,584	9,797	0,06	0,869	0,869	568,299	0,156	0,069931034
Pavers	2005	121	175	Pavers_2005_175	21,287	1,147	3,731	8,921	0,057	0,5	0,5	568,299	0,103	0,046172414
Pavers	2005	176	250	Pavers_2005_250	26,087	0,928	2,661	8,591	0,057	0,382	0,382	568,299	0,083	0,037206897
Pavers	2005	251	500	Pavers_2005_500	27,622	0,818	4,283	7,91	0,05	0,335	0,335	568,299	0,073	0,032724138
Pavers	2010	16	25	Pavers_2010_25	2,244446	1,886	6,22261	5,97127	0,005	0,619	0,569	585,4019	0,17	0,076206897
Pavers	2010	26	50	Pavers_2010_50	2,244446	1,886	6,22261	5,97127	0,005	0,619	0,569	585,4019	0,17	0,076206897
Pavers	2010	51	120	Pavers_2010_120	0,922393	0,775	3,82417	7,01944	0,005	0,54	0,497	521,2606	0,152	0,068137931
Pavers	2010	121	175	Pavers_2010_175	0,693583	0,583	3,10662	6,66867	0,005	0,337	0,31	525,3233	0,153	0,068586207
Pavers	2010	176	250	Pavers_2010_250	0,236627	0,199	1,01703	4,38018	0,005	0,111	0,102	526,8527	0,153	0,068586207
Pavers	2010	251	500	Pavers_2010_500	0,240458	0,202	1,1256	3,56944	0,005	0,123	0,113	517,8758	0,151	0,067689655
Pavers	2011	16	25	Pavers_2011_25	2,255759	1,895	6,28822	5,97418	0,005	0,621	0,571	583,8947	0,17	0,076206897
Pavers	2011	26	50	Pavers_2011_50	2,255759	1,895	6,28822	5,97418	0,005	0,621	0,571	583,8947	0,17	0,076206897
Pavers	2011	51	120	Pavers_2011_120	0,882284	0,741	3,7912	6,70468	0,005	0,521	0,479	519,7431	0,152	0,068137931
Pavers	2011	121	175	Pavers_2011_175	0,67473	0,567	3,11177	6,45159	0,005	0,327	0,301	524,0864	0,153	0,068586207
Pavers	2011	176	250	Pavers_2011_250	0,244703	0,206	1,02596	4,38871	0,005	0,112	0,103	525,5251	0,153	0,068586207
Pavers	2011	251	500	Pavers_2011_500	0,249329	0,21	1,13249	3,58498	0,005	0,125	0,115	516,5811	0,151	0,067689655
Pavers	2012	16	25	Pavers_2012_25	2,286702	1,921	6,36408	5,86068	0,005	0,609	0,56	582,5825	0,17	0,076206897
Pavers	2012	26	50	Pavers_2012_50	2,286702	1,921	6,36408	5,86068	0,005	0,609	0,56	582,5825	0,17	0,076206897
Pavers	2012	51	120	Pavers_2012_120	0,886577	0,745	3,81157	6,67323	0,005	0,523	0,481	518,3581	0,152	0,068137931
Pavers	2012	121	175	Pavers_2012_175	0,677654	0,569	3,13178	6,44162	0,005	0,329	0,303	522,8325	0,153	0,068586207
Pavers	2012	176	250	Pavers_2012_250	0,2532	0,213	1,035	4,41317	0,005	0,114	0,105	524,2222	0,153	0,068586207

Pavers	2012	251	500	Pavers_2012_500	0,257974	0,217	1,13914	3,59993	0,005	0,127	0,117	515,2863	0,151	0,067689655
Pavers	2013	16	25	Pavers_2013_25	2,27571	1,912	6,39148	5,84153	0,005	0,605	0,557	580,2093	0,171	0,076655172
Pavers	2013	26	50	Pavers_2013_50	2,27571	1,912	6,39148	5,84153	0,005	0,605	0,557	580,2093	0,171	0,076655172
Pavers	2013	51	120	Pavers_2013_120	0,845721	0,711	3,79289	6,43604	0,005	0,501	0,461	516,6013	0,152	0,068137931
Pavers	2013	121	175	Pavers_2013_175	0,630117	0,529	3,11657	6,05919	0,005	0,304	0,28	519,6823	0,153	0,068586207
Pavers	2013	176	250	Pavers_2013_250	0,245733	0,206	1,01743	4,23038	0,005	0,106	0,098	521,5314	0,153	0,068586207
Pavers	2013	251	500	Pavers_2013_500	0,242925	0,204	1,08604	3,39449	0,005	0,118	0,108	514,2313	0,151	0,067689655
Pavers	2014	16	25	Pavers_2014_25	2,258865	1,898	6,3806	5,71682	0,005	0,595	0,547	577,016	0,171	0,076655172
Pavers	2014	26	50	Pavers_2014_50	2,258865	1,898	6,3806	5,71682	0,005	0,595	0,547	577,016	0,171	0,076655172
Pavers	2014	51	120	Pavers_2014_120	0,81298	0,683	3,77256	6,19872	0,005	0,483	0,444	514,3769	0,152	0,068137931
Pavers	2014	121	175	Pavers_2014_175	0,597911	0,502	3,1146	5,73631	0,005	0,287	0,264	516,745	0,153	0,068586207
Pavers	2014	176	250	Pavers_2014_250	0,247393	0,208	1,02279	4,14032	0,005	0,105	0,097	518,7225	0,153	0,068586207
Pavers	2014	251	500	Pavers_2014_500	0,214341	0,18	1,00469	3,04734	0,005	0,101	0,093	512,1908	0,151	0,067689655
Pavers	2015	16	25	Pavers_2015_25	2,205076	1,853	6,34019	5,63731	0,005	0,579	0,533	571,0859	0,17	0,076206897
Pavers	2015	26	50	Pavers_2015_50	2,205076	1,853	6,34019	5,63731	0,005	0,579	0,533	571,0859	0,17	0,076206897
Pavers	2015	51	120	Pavers_2015_120	0,809163	0,68	3,78832	6,14096	0,005	0,479	0,441	509,3767	0,152	0,068137931
Pavers	2015	121	175	Pavers_2015_175	0,582419	0,489	3,11546	5,53669	0,005	0,277	0,255	511,6457	0,153	0,068586207
Pavers	2015	176	250	Pavers_2015_250	0,254974	0,214	1,03121	4,16051	0,005	0,107	0,098	513,4682	0,153	0,068586207
Pavers	2015	251	500	Pavers_2015_500	0,209561	0,176	0,97787	2,91741	0,005	0,097	0,089	506,0973	0,151	0,067689655
Pavers	2016	16	25	Pavers_2016_25	2,174792	1,827	6,33993	5,57882	0,005	0,569	0,523	565,2336	0,17	0,076206897
Pavers	2016	26	50	Pavers_2016_50	2,174792	1,827	6,33993	5,57882	0,005	0,569	0,523	565,2336	0,17	0,076206897
Pavers	2016	51	120	Pavers_2016_120	0,773362	0,65	3,76854	5,88646	0,005	0,457	0,42	503,7795	0,152	0,068137931
Pavers	2016	121	175	Pavers_2016_175	0,515586	0,433	3,08023	4,87397	0,005	0,242	0,223	506,5401	0,153	0,068586207
Pavers	2016	176	250	Pavers_2016_250	0,254126	0,214	1,03591	4,02384	0,005	0,104	0,096	508,0698	0,153	0,068586207
Pavers	2016	251	500	Pavers_2016_500	0,214564	0,18	0,9829	2,88492	0,005	0,096	0,089	500,9364	0,151	0,067689655
Pavers	2017	16	25	Pavers_2017_25	2,059621	1,731	6,19932	5,43675	0,005	0,54	0,496	556,4528	0,17	0,076206897
Pavers	2017	26	50	Pavers_2017_50	2,059621	1,731	6,19932	5,43675	0,005	0,54	0,496	556,4528	0,17	0,076206897
Pavers	2017	51	120	Pavers_2017_120	0,744072	0,625	3,75882	5,69243	0,005	0,437	0,402	495,9253	0,152	0,068137931
Pavers	2017	121	175	Pavers_2017_175	0,462819	0,389	3,06282	4,35312	0,005	0,214	0,197	498,967	0,153	0,068586207
Pavers	2017	176	250	Pavers_2017_250	0,247933	0,208	1,03652	3,80866	0,005	0,1	0,092	499,5617	0,153	0,068586207
Pavers	2017	251	500	Pavers_2017_500	0,199578	0,168	0,97942	2,48674	0,005	0,087	0,08	491,7843	0,151	0,067689655
Pavers	2018	16	25	Pavers_2018_25	1,831035	1,539	5,8493	5,12103	0,005	0,478	0,44	547,0785	0,17	0,076206897
Pavers	2018	26	50	Pavers_2018_50	1,831035	1,539	5,8493	5,12103	0,005	0,478	0,44	547,0785	0,17	0,076206897
Pavers	2018	51	120	Pavers_2018_120	0,637446	0,536	3,66032	5,01936	0,005	0,375	0,345	488,1812	0,152	0,068137931
Pavers	2018	121	175	Pavers_2018_175	0,403099	0,339	3,03913	3,7472	0,005	0,183	0,168	491,322	0,153	0,068586207
Pavers	2018	176	250	Pavers_2018_250	0,235833	0,198	1,03446	3,47438	0,005	0,092	0,085	491,543	0,153	0,068586207
Pavers	2018	251	500	Pavers_2018_500	0,195547	0,164	0,98125	2,32002	0,005	0,083	0,076	484,2774	0,151	0,067689655
Pavers	2019	16	25	Pavers_2019_25	1,687019	1,418	5,65687	4,91634	0,005	0,436	0,401	538,3246	0,17	0,076206897
Pavers	2019	26	50	Pavers_2019_50	1,687019	1,418	5,65687	4,91634	0,005	0,436	0,401	538,3246	0,17	0,076206897
Pavers	2019	51	120	Pavers_2019_120	0,589904	0,496	3,62215	4,67048	0,005	0,345	0,318	480,2509	0,152	0,068137931
Pavers	2019	121	175	Pavers_2019_175	0,355588	0,299	3,01323	3,24473	0,005	0,159	0,146	483,3938	0,153	0,068586207
Pavers	2019	176	250	Pavers_2019_250	0,222293	0,187	1,03181	3,11084	0,005	0,084	0,077	483,5743	0,153	0,068586207
Pavers	2019	251	500	Pavers_2019_500	0,198123	0,166	0,98586	2,26992	0,005	0,081	0,075	476,9707	0,151	0,067689655
Pavers	2020	16	25	Pavers_2020_25	1,568718	1,318	5,52345	4,76401	0,005	0,402	0,37	526,2098	0,17	0,076206897
Pavers	2020	26	50	Pavers_2020_50	1,568718	1,318	5,52345	4,76401	0,005	0,402	0,37	526,2098	0,17	0,076206897
Pavers	2020	51	120	Pavers_2020_120	0,558949	0,47	3,60405	4,42718	0,005	0,325	0,299	469,8815	0,152	0,068137931
Pavers	2020	121	175	Pavers_2020_175	0,324615	0,273	3,0097	2,91833	0,005	0,142	0,131	472,7746	0,153	0,068586207
Pavers	2020	176	250	Pavers_2020_250	0,209036	0,176	1,02834	2,77699	0,005	0,076	0,07	472,8337	0,153	0,068586207
Pavers	2020	251	500	Pavers_2020_500	0,195949	0,165	0,98677	2,13394	0,005	0,077	0,071	466,2059	0,151	0,067689655
Pavers	2021	16	25	Pavers_2021_25	1,43708	1,208	5,30162	4,60183	0,005	0,37	0,34	526,5153	0,17	0,076206897
Pavers	2021	26	50	Pavers_2021_50	1,43708	1,208	5,30162	4,60183	0,005	0,37	0,34	526,5153	0,17	0,076206897
Pavers	2021	51	120	Pavers_2021_120	0,499355	0,42	3,56251	4,02622	0,005	0,285	0,262	469,7736	0,152	0,068137931
Pavers	2021	121	175	Pavers_2021_175	0,304315	0,256	3,01647	2,6948	0,005	0,13	0,12	472,5552	0,153	0,068586207
Pavers	2021	176	250	Pavers_2021_250	0,196899	0,165	1,02422	2,4844	0,005	0,07	0,064	472,4765	0,153	0,068586207
Pavers	2021	251	500	Pavers_2021_500	0,195105	0,164	0,9877	2,05298	0,005	0,074	0,068	465,5908	0,151	0,067689655
Pavers	2022	16	25	Pavers_2022_25	1,299052	1,092	5,11433	4,42092	0,005	0,33	0,303	526,8963	0,17	0,076206897
Pavers	2022	26	50	Pavers_2022_50	1,299052	1,092	5,11433	4,42092	0,005	0,33	0,303	526,8963	0,17	0,076206897
Pavers	2022	51	120	Pavers_2022_120	0,443951	0,373	3,52511	3,65932	0,005	0,248	0,228	470,1854	0,152	0,068137931
Pavers	2022	121	175	Pavers_2022_175	0,255688	0,215	2,99478	2,17958	0,005	0,104	0,095	472,7599	0,153	0,068586207
Pavers	2022	176	250	Pavers_2022_250	0,167123	0,14	1,01231	1,89985	0,005	0,055	0,05	472,3718	0,153	0,068586207
Pavers	2022	251	500	Pavers_2022_500	0,178545	0,15	0,98238	1,81028	0,005	0,063	0,058	466,0042	0,151	0,067689655
Pavers	2023	16	25	Pavers_2023_25	1,198318	1,007	5,00667	4,28484	0,005	0,299	0,275	526,8595	0,17	0,076206897
Pavers	2023	26	50	Pavers_2023_50	1,198318	1,007	5,00667	4,28484	0,005	0,299	0,275	526,8595	0,17	0,076206897
Pavers	2023	51	120	Pavers_2023_120	0,415607	0,349	3,50733	3,42661	0,005	0,226	0,208	470,0839	0,152	0,068137931
Pavers	2023	121	175	Pavers_2023_175	0,237199	0,199	2,99398	1,95517	0,005	0,092	0,085	472,7178	0,153	0,068586207
Pavers	2023	176	250	Pavers_2023_250	0,154288	0,13	1,01018	1,6106	0,005	0,047	0,043	472,6051	0,153	0,068586207
Pavers	2023	251	500	Pavers_2023_500	0,18061	0,152	0,98653	1,77101	0,005	0,062	0,057	466,0038	0,151	0,067689655
Pavers	2024	16	25	Pavers_2024_25	1,130978	0,95	4,95625	4,20308	0,005	0,279	0,257	526,8565	0,17	0,076206897
Pavers	2024	26	50	Pavers_2024_50	1,130978	0,95	4,95625	4,20308	0,005	0,279	0,257	526,8565	0,17	0,076206897
Pavers	2024	51	120	Pavers_2024_120	0,40131	0,337	3,50784	3,2771	0,005	0,213	0,196	470,2262	0,152	0,068137931
Pavers	2024	121	175	Pavers_2024_175	0,226916	0,191	3,0042	1,80882	0,005	0,084	0,078	472,6605	0,153	0,068586207
Pavers	2024	176	250	Pavers_2024_250	0,141914	0,119	1,00872	1,34323	0,005	0,041	0,038	473,2362	0,153	0,068586207
Pavers	2024	251	500	Pavers_2024_500	0,169789	0,143	0,98624	1,54798	0,005	0,054	0,049	467,1711	0,151	0,067689655

Pavers	2025	16	25	Pavers_2025_25	1,092933	0,918	4,94451	4,13112	0,005	0,265	0,243	526,8533	0,17	0,076206897
Pavers	2025	26	50	Pavers_2025_50	1,092933	0,918	4,94451	4,13112	0,005	0,265	0,243	526,8533	0,17	0,076206897
Pavers	2025	51	120	Pavers_2025_120	0,373474	0,314	3,49286	3,06788	0,005	0,19	0,175	469,8988	0,152	0,068137931
Pavers	2025	121	175	Pavers_2025_175	0,214799	0,18	3,0071	1,64396	0,005	0,077	0,071	472,485	0,153	0,068586207
Pavers	2025	176	250	Pavers_2025_250	0,127304	0,107	1,00414	1,03493	0,005	0,034	0,031	473,4832	0,153	0,068586207
Pavers	2025	251	500	Pavers_2025_500	0,136633	0,115	0,96892	1,13351	0,005	0,039	0,036	465,8824	0,151	0,067689655
Pavers	2030	16	25	Pavers_2030_25	1,849	0,685	2,339	4,332	0,007	0,161	0,161	568,299	0,061	0,027344828
Pavers	2030	26	50	Pavers_2030_50	3,42	0,845	5,396	3,841	0,007	0,134	0,134	568,299	0,076	0,034068966
Pavers	2030	51	120	Pavers_2030_120	4,084	0,408	3,8	2,468	0,006	0,121	0,121	568,3	0,036	0,016137931
Pavers	2030	121	175	Pavers_2030_175	5,577	0,3	3,326	1,425	0,006	0,074	0,074	568,299	0,027	0,012103448
Pavers	2030	176	250	Pavers_2030_250	7,306	0,259	1,192	1,246	0,006	0,045	0,045	568,299	0,023	0,010310345
Pavers	2030	251	500	Pavers_2030_500	8,558	0,253	1,181	1,141	0,005	0,043	0,043	568,299	0,022	0,009862069
Pavers	2035	16	25	Pavers_2035_25	1,849	0,685	2,339	4,332	0,007	0,161	0,161	568,299	0,061	0,027344828
Pavers	2035	26	50	Pavers_2035_50	2,812	0,694	5,26	3,555	0,007	0,076	0,076	568,299	0,062	0,027793103
Pavers	2035	51	120	Pavers_2035_120	3,386	0,338	3,774	1,986	0,006	0,069	0,069	568,299	0,03	0,013448276
Pavers	2035	121	175	Pavers_2035_175	4,543	0,244	3,319	0,889	0,006	0,043	0,043	568,299	0,022	0,009862069
Pavers	2035	176	250	Pavers_2035_250	6,219	0,221	1,157	0,772	0,006	0,027	0,027	568,3	0,019	0,008517241
Pavers	2035	251	500	Pavers_2035_500	7,364	0,218	1,111	0,722	0,005	0,026	0,026	568,299	0,019	0,008517241
Pavers	2040	16	25	Pavers_2040_25	1,849	0,685	2,339	4,332	0,007	0,161	0,161	568,299	0,061	0,027344828
Pavers	2040	26	50	Pavers_2040_50	2,504	0,618	5,189	3,393	0,007	0,047	0,047	568,299	0,055	0,024655172
Pavers	2040	51	120	Pavers_2040_120	3,03	0,302	3,763	1,731	0,006	0,043	0,043	568,299	0,027	0,012103448
Pavers	2040	121	175	Pavers_2040_175	3,958	0,213	3,319	0,583	0,006	0,027	0,027	568,299	0,019	0,008517241
Pavers	2040	176	250	Pavers_2040_250	5,625	0,2	1,138	0,525	0,006	0,018	0,018	568,299	0,018	0,008068966
Pavers	2040	251	500	Pavers_2040_500	6,703	0,198	1,085	0,498	0,005	0,018	0,018	568,299	0,017	0,00762069
Paving Equipment	1990	16	25	Paving Equipment_1990_25	5,257	2,213	4,999	6,919	0,855	0,741	0,741	568,299	0,199	0,089206897
Paving Equipment	1990	26	50	Paving Equipment_1990_50	21,788	4,84	9,783	7,965	0,871	1,277	1,277	568,299	0,436	0,195448276
Paving Equipment	1990	51	120	Paving Equipment_1990_120	24,593	2,398	5,796	15,202	0,791	1,352	1,352	568,299	0,216	0,096827586
Paving Equipment	1990	121	175	Paving Equipment_1990_175	35,738	1,88	5,196	14,821	0,758	1,044	1,044	568,3	0,169	0,075758621
Paving Equipment	1990	176	250	Paving Equipment_1990_250	43,262	1,88	5,196	14,821	0,758	1,044	1,044	568,299	0,169	0,075758621
Paving Equipment	2000	16	25	Paving Equipment_2000_25	4,652	1,958	4,53	6,358	0,065	0,563	0,563	568,299	0,176	0,078896552
Paving Equipment	2000	26	50	Paving Equipment_2000_50	19,86	4,412	9,076	7,101	0,066	0,921	0,921	568,299	0,398	0,178413793
Paving Equipment	2000	51	120	Paving Equipment_2000_120	19,826	1,933	4,844	11,122	0,06	0,909	0,909	568,299	0,174	0,078
Paving Equipment	2000	121	175	Paving Equipment_2000_175	25,015	1,316	4,018	10,15	0,057	0,553	0,553	568,299	0,118	0,052896552
Paving Equipment	2000	176	250	Paving Equipment_2000_250	26,974	1,172	3,458	9,895	0,057	0,486	0,486	568,299	0,105	0,047068966
Paving Equipment	2005	16	25	Paving Equipment_2005_25	2,184	0,919	2,642	5,412	0,065	0,347	0,347	568,299	0,082	0,036758621
Paving Equipment	2005	26	50	Paving Equipment_2005_50	18,352	4,077	8,626	6,73	0,066	0,875	0,875	568,299	0,367	0,164517241
Paving Equipment	2005	51	120	Paving Equipment_2005_120	17,633	1,719	4,557	9,754	0,06	0,86	0,86	568,299	0,155	0,069482759
Paving Equipment	2005	121	175	Paving Equipment_2005_175	21,589	1,135	3,705	8,873	0,057	0,494	0,494	568,299	0,102	0,045724138
Paving Equipment	2005	176	250	Paving Equipment_2005_250	21,201	0,921	2,655	8,548	0,057	0,38	0,38	568,299	0,083	0,037206897
Paving Equipment	2010	16	25	Paving Equipment_2010_25	1,378997	1,159	4,92203	5,35696	0,005	0,47	0,433	578,6236	0,168	0,075310345
Paving Equipment	2010	26	50	Paving Equipment_2010_50	1,378997	1,159	4,92203	5,35696	0,005	0,47	0,433	578,6236	0,168	0,075310345
Paving Equipment	2010	51	120	Paving Equipment_2010_120	0,934999	0,786	3,90118	7,23593	0,005	0,553	0,508	526,5834	0,153	0,068586207
Paving Equipment	2010	121	175	Paving Equipment_2010_175	0,573407	0,482	3,13688	6,09511	0,005	0,295	0,271	523,4127	0,152	0,068137931
Paving Equipment	2010	176	250	Paving Equipment_2010_250	0,486641	0,409	1,69744	6,03614	0,005	0,224	0,206	524,3728	0,153	0,068586207
Paving Equipment	2011	16	25	Paving Equipment_2011_25	1,380687	1,16	4,99687	5,36974	0,005	0,472	0,434	577,1303	0,168	0,075310345
Paving Equipment	2011	26	50	Paving Equipment_2011_50	1,380687	1,16	4,99687	5,36974	0,005	0,472	0,434	577,1303	0,168	0,075310345
Paving Equipment	2011	51	120	Paving Equipment_2011_120	0,895349	0,752	3,87125	6,99544	0,005	0,536	0,493	524,9269	0,153	0,068586207
Paving Equipment	2011	121	175	Paving Equipment_2011_175	0,56507	0,475	3,14337	5,97526	0,005	0,29	0,267	522,1549	0,152	0,068137931
Paving Equipment	2011	176	250	Paving Equipment_2011_250	0,466258	0,392	1,64572	5,77978	0,005	0,213	0,196	523,0323	0,153	0,068586207
Paving Equipment	2012	16	25	Paving Equipment_2012_25	1,384947	1,164	5,06516	5,34363	0,005	0,47	0,432	575,687	0,168	0,075310345
Paving Equipment	2012	26	50	Paving Equipment_2012_50	1,384947	1,164	5,06516	5,34363	0,005	0,47	0,432	575,687	0,168	0,075310345
Paving Equipment	2012	51	120	Paving Equipment_2012_120	0,910401	0,765	3,90635	7,04165	0,005	0,546	0,503	523,5886	0,153	0,068586207
Paving Equipment	2012	121	175	Paving Equipment_2012_175	0,56544	0,475	3,15801	5,9326	0,005	0,29	0,267	520,7286	0,152	0,068137931
Paving Equipment	2012	176	250	Paving Equipment_2012_250	0,474854	0,399	1,657	5,81292	0,005	0,215	0,198	521,7154	0,153	0,068586207
Paving Equipment	2013	16	25	Paving Equipment_2013_25	1,327494	1,115	5,02677	5,2986	0,005	0,459	0,422	572,4644	0,168	0,075310345
Paving Equipment	2013	26	50	Paving Equipment_2013_50	1,327494	1,115	5,02677	5,2986	0,005	0,459	0,422	572,4644	0,168	0,075310345
Paving Equipment	2013	51	120	Paving Equipment_2013_120	0,845445	0,71	3,86369	6,6576	0,005	0,507	0,467	520,6724	0,153	0,068586207
Paving Equipment	2013	121	175	Paving Equipment_2013_175	0,532035	0,447	3,1205	5,60344	0,005	0,271	0,249	517,6606	0,152	0,068137931
Paving Equipment	2013	176	250	Paving Equipment_2013_250	0,40741	0,342	1,48037	5,25206	0,005	0,18	0,166	519,5215	0,153	0,068586207
Paving Equipment	2014	16	25	Paving Equipment_2014_25	1,253528	1,053	4,95215	5,18385	0,005	0,437	0,402	569,4822	0,168	0,075310345
Paving Equipment	2014	26	50	Paving Equipment_2014_50	1,253528	1,053	4,95215	5,18385	0,005	0,437	0,402	569,4822	0,168	0,075310345
Paving Equipment	2014	51	120	Paving Equipment_2014_120	0,805438	0,677	3,83664	6,36952	0,005	0,486	0,447	518,0756	0,153	0,068586207
Paving Equipment	2014	121	175	Paving Equipment_2014_175	0,494038	0,415	3,09686	5,21567	0,005	0,249	0,229	515,0343	0,152	0,068137931
Paving Equipment	2014	176	250	Paving Equipment_2014_250	0,369032	0,31	1,37011	4,78232	0,005	0,158	0,146	516,8998	0,153	0,068586207
Paving Equipment	2015	16	25	Paving Equipment_2015_25	1,166929	0,981	4,86895	5,02757	0,005	0,407	0,374	563,5534	0,168	0,075310345
Paving Equipment	2015	26	50	Paving Equipment_2015_50	1,166929	0,981	4,86895	5,02757	0,005	0,407	0,374	563,5534	0,168	0,075310345
Paving Equipment	2015	51	120	Paving Equipment_2015_120	0,786628	0,661	3,83329	6,14454	0,005	0,471	0,433	513,1672	0,153	0,068586207
Paving Equipment	2015	121	175	Paving Equipment_2015_175	0,48887	0,411	3,10403	4,96561	0,005	0,242	0,223	509,8942	0,152	0,068137931
Paving Equipment	2015	176	250	Paving Equipment_2015_250	0,374849	0,315	1,37947	4,77176	0,005	0,159	0,146	511,6544	0,153	0,068586207
Paving Equipment	2016	16	25	Paving Equipment_2016_25	1,178909	0,991	4,93662	4,98487	0,005	0,403	0,371	557,7058	0,168	0,075310345
Paving Equipment	2016	26	50	Paving Equipment_2016_50	1,178909	0,991	4,93662	4,98487	0,005	0,403	0,371	557,7058	0,168	0,075310345
Paving Equipment	2016	51	120	Paving Equipment_2016_120	0,741701	0,623	3,79639	5,7333	0,005	0,438	0,403	507,9102	0,153	0,068586207
Paving Equipment	2016	121	175	Paving Equipment_2016_175	0,442497	0,372	3,08114	4,3217	0,005	0,214	0,197	504,8201	0,152	0,068137931

Paving Equipment	2016	176	250	Paving Equipment_2016_250	0,353542	0,297	1,33145	4,42821	0,005	0,148	0,136	506,1965	0,153	0,068586207
Paving Equipment	2017	16	25	Paving Equipment_2017_25	1,102141	0,926	4,80403	4,72756	0,005	0,359	0,33	548,6481	0,168	0,075310345
Paving Equipment	2017	26	50	Paving Equipment_2017_50	1,102141	0,926	4,80403	4,72756	0,005	0,359	0,33	548,6481	0,168	0,075310345
Paving Equipment	2017	51	120	Paving Equipment_2017_120	0,670017	0,563	3,74146	5,20745	0,005	0,391	0,359	500,1649	0,153	0,068586207
Paving Equipment	2017	121	175	Paving Equipment_2017_175	0,407568	0,342	3,07321	3,89633	0,005	0,195	0,179	497,148	0,152	0,068137931
Paving Equipment	2017	176	250	Paving Equipment_2017_250	0,342633	0,288	1,333	4,12109	0,005	0,141	0,13	498,7323	0,153	0,068586207
Paving Equipment	2018	16	25	Paving Equipment_2018_25	0,877571	0,737	4,41578	4,31244	0,005	0,286	0,263	540,6115	0,168	0,075310345
Paving Equipment	2018	26	50	Paving Equipment_2018_50	0,877571	0,737	4,41578	4,31244	0,005	0,286	0,263	540,6115	0,168	0,075310345
Paving Equipment	2018	51	120	Paving Equipment_2018_120	0,534861	0,449	3,60743	4,27034	0,005	0,302	0,278	492,1184	0,153	0,068586207
Paving Equipment	2018	121	175	Paving Equipment_2018_175	0,337615	0,284	3,02602	3,17208	0,005	0,155	0,143	489,2024	0,152	0,068137931
Paving Equipment	2018	176	250	Paving Equipment_2018_250	0,307374	0,258	1,28117	3,58656	0,005	0,123	0,113	490,6833	0,153	0,068586207
Paving Equipment	2019	16	25	Paving Equipment_2019_25	0,838543	0,705	4,40798	4,23779	0,005	0,27	0,248	531,8612	0,168	0,075310345
Paving Equipment	2019	26	50	Paving Equipment_2019_50	0,838543	0,705	4,40798	4,23779	0,005	0,27	0,248	531,8612	0,168	0,075310345
Paving Equipment	2019	51	120	Paving Equipment_2019_120	0,50594	0,425	3,59849	4,04152	0,005	0,281	0,258	484,387	0,153	0,068586207
Paving Equipment	2019	121	175	Paving Equipment_2019_175	0,302373	0,254	3,0109	2,6924	0,005	0,134	0,123	481,2251	0,152	0,068137931
Paving Equipment	2019	176	250	Paving Equipment_2019_250	0,286526	0,241	1,24449	3,25106	0,005	0,112	0,103	482,6441	0,153	0,068586207
Paving Equipment	2020	16	25	Paving Equipment_2020_25	0,73951	0,621	4,22322	3,9519	0,005	0,217	0,2	520,1235	0,168	0,075310345
Paving Equipment	2020	26	50	Paving Equipment_2020_50	0,73951	0,621	4,22322	3,9519	0,005	0,217	0,2	520,1235	0,168	0,075310345
Paving Equipment	2020	51	120	Paving Equipment_2020_120	0,472907	0,397	3,58172	3,78064	0,005	0,256	0,235	473,3249	0,153	0,068586207
Paving Equipment	2020	121	175	Paving Equipment_2020_175	0,294586	0,248	3,02393	2,55498	0,005	0,128	0,118	470,7359	0,152	0,068137931
Paving Equipment	2020	176	250	Paving Equipment_2020_250	0,289784	0,243	1,25215	3,2202	0,005	0,111	0,102	472,1514	0,153	0,068586207
Paving Equipment	2021	16	25	Paving Equipment_2021_25	0,698022	0,587	4,21072	3,88226	0,005	0,2	0,184	520,3965	0,168	0,075310345
Paving Equipment	2021	26	50	Paving Equipment_2021_50	0,698022	0,587	4,21072	3,88226	0,005	0,2	0,184	520,3965	0,168	0,075310345
Paving Equipment	2021	51	120	Paving Equipment_2021_120	0,422572	0,355	3,5537	3,45065	0,005	0,219	0,201	473,2205	0,153	0,068586207
Paving Equipment	2021	121	175	Paving Equipment_2021_175	0,272687	0,229	3,03229	2,31505	0,005	0,114	0,105	470,6495	0,152	0,068137931
Paving Equipment	2021	176	250	Paving Equipment_2021_250	0,250607	0,211	1,20904	2,58202	0,005	0,092	0,085	472,151	0,153	0,068586207
Paving Equipment	2022	16	25	Paving Equipment_2022_25	0,68013	0,571	4,24448	3,83611	0,005	0,188	0,173	520,6594	0,168	0,075310345
Paving Equipment	2022	26	50	Paving Equipment_2022_50	0,68013	0,571	4,24448	3,83611	0,005	0,188	0,173	520,6594	0,168	0,075310345
Paving Equipment	2022	51	120	Paving Equipment_2022_120	0,351718	0,296	3,50075	2,99968	0,005	0,171	0,157	473,4475	0,153	0,068586207
Paving Equipment	2022	121	175	Paving Equipment_2022_175	0,253077	0,213	3,03777	2,07331	0,005	0,101	0,093	470,6646	0,152	0,068137931
Paving Equipment	2022	176	250	Paving Equipment_2022_250	0,232653	0,195	1,20363	2,22813	0,005	0,083	0,076	472,169	0,153	0,068586207
Paving Equipment	2023	16	25	Paving Equipment_2023_25	0,644074	0,541	4,24108	3,77446	0,005	0,173	0,159	521,1138	0,169	0,075758621
Paving Equipment	2023	26	50	Paving Equipment_2023_50	0,644074	0,541	4,24108	3,77446	0,005	0,173	0,159	521,1138	0,169	0,075758621
Paving Equipment	2023	51	120	Paving Equipment_2023_120	0,331302	0,278	3,50331	2,83717	0,005	0,152	0,14	473,427	0,153	0,068586207
Paving Equipment	2023	121	175	Paving Equipment_2023_175	0,242414	0,204	3,05059	1,91255	0,005	0,093	0,086	470,663	0,152	0,068137931
Paving Equipment	2023	176	250	Paving Equipment_2023_250	0,208228	0,175	1,16523	1,88495	0,005	0,07	0,065	472,169	0,153	0,068586207
Paving Equipment	2024	16	25	Paving Equipment_2024_25	0,622364	0,523	4,27468	3,74329	0,005	0,164	0,151	521,0575	0,169	0,075758621
Paving Equipment	2024	26	50	Paving Equipment_2024_50	0,622364	0,523	4,27468	3,74329	0,005	0,164	0,151	521,0575	0,169	0,075758621
Paving Equipment	2024	51	120	Paving Equipment_2024_120	0,311995	0,262	3,50288	2,67309	0,005	0,135	0,125	473,1748	0,153	0,068586207
Paving Equipment	2024	121	175	Paving Equipment_2024_175	0,233948	0,197	3,06623	1,78512	0,005	0,086	0,079	470,6614	0,152	0,068137931
Paving Equipment	2024	176	250	Paving Equipment_2024_250	0,164733	0,138	1,11417	1,29567	0,005	0,048	0,044	472,2124	0,153	0,068586207
Paving Equipment	2025	16	25	Paving Equipment_2025_25	0,566694	0,476	4,20347	3,62672	0,005	0,141	0,13	520,9975	0,169	0,075758621
Paving Equipment	2025	26	50	Paving Equipment_2025_50	0,566694	0,476	4,20347	3,62672	0,005	0,141	0,13	520,9975	0,169	0,075758621
Paving Equipment	2025	51	120	Paving Equipment_2025_120	0,287394	0,241	3,48256	2,49628	0,005	0,118	0,108	473,4239	0,153	0,068586207
Paving Equipment	2025	121	175	Paving Equipment_2025_175	0,208465	0,175	3,03837	1,509	0,005	0,075	0,069	470,4844	0,152	0,068137931
Paving Equipment	2025	176	250	Paving Equipment_2025_250	0,158556	0,133	1,11653	1,10952	0,005	0,043	0,04	472,2341	0,153	0,068586207
Paving Equipment	2030	16	25	Paving Equipment_2030_25	1,628	0,685	2,339	4,332	0,007	0,161	0,161	568,299	0,061	0,027344828
Paving Equipment	2030	26	50	Paving Equipment_2030_50	3,613	0,802	5,309	3,809	0,007	0,126	0,126	568,299	0,072	0,032275862
Paving Equipment	2030	51	120	Paving Equipment_2030_120	4,007	0,39	3,774	2,393	0,006	0,114	0,114	568,3	0,035	0,015689655
Paving Equipment	2030	121	175	Paving Equipment_2030_175	5,525	0,29	3,306	1,363	0,006	0,07	0,07	568,299	0,026	0,011655172
Paving Equipment	2030	176	250	Paving Equipment_2030_250	5,771	0,25	1,171	1,176	0,006	0,042	0,042	568,299	0,022	0,009862069
Paving Equipment	2035	16	25	Paving Equipment_2035_25	1,628	0,685	2,339	4,332	0,007	0,161	0,161	568,299	0,061	0,027344828
Paving Equipment	2035	26	50	Paving Equipment_2035_50	2,991	0,664	5,181	3,511	0,007	0,07	0,07	568,3	0,059	0,026448276
Paving Equipment	2035	51	120	Paving Equipment_2035_120	3,343	0,326	3,753	1,928	0,006	0,064	0,064	568,299	0,029	0,013
Paving Equipment	2035	121	175	Paving Equipment_2035_175	4,485	0,235	3,303	0,832	0,006	0,04	0,04	568,299	0,021	0,009413793
Paving Equipment	2035	176	250	Paving Equipment_2035_250	4,886	0,212	1,14	0,714	0,006	0,024	0,024	568,299	0,019	0,008517241
Paving Equipment	2040	16	25	Paving Equipment_2040_25	1,628	0,685	2,339	4,332	0,007	0,161	0,161	568,299	0,061	0,027344828
Paving Equipment	2040	26	50	Paving Equipment_2040_50	2,651	0,589	5,111	3,361	0,007	0,042	0,042	568,3	0,053	0,023758621
Paving Equipment	2040	51	120	Paving Equipment_2040_120	2,989	0,291	3,744	1,687	0,006	0,039	0,039	568,299	0,026	0,011655172
Paving Equipment	2040	121	175	Paving Equipment_2040_175	3,901	0,205	3,304	0,536	0,006	0,025	0,025	568,299	0,018	0,008068966
Paving Equipment	2040	176	250	Paving Equipment_2040_250	4,452	0,193	1,127	0,485	0,006	0,017	0,017	568,299	0,017	0,00762069
Plate Compactors	1990	6	15	Plate Compactors_1990_15	2,156	1,804	4,999	9,999	1,049	0,975	0,975	568,299	0,162	0,07262069
Plate Compactors	2000	6	15	Plate Compactors_2000_15	1,852	1,55	4,606	8,519	0,079	0,708	0,708	568,299	0,139	0,062310345
Plate Compactors	2005	6	15	Plate Compactors_2005_15	0,955	0,799	3,503	5,435	0,079	0,377	0,377	568,299	0,072	0,032275862
Plate Compactors	2010	6	15	Plate Compactors_2010_15	0,794	0,664	3,469	4,178	0,008	0,198	0,198	568,299	0,059	0,026448276
Plate Compactors	2011	6	15	Plate Compactors_2011_15	0,791	0,662	3,469	4,15	0,008	0,172	0,172	568,299	0,059	0,026448276
Plate Compactors	2012	6	15	Plate Compactors_2012_15	0,79	0,661	3,469	4,142	0,008	0,165	0,165	568,3	0,059	0,026448276
Plate Compactors	2013	6	15	Plate Compactors_2013_15	0,79	0,661	3,469	4,142	0,008	0,162	0,162	568,3	0,059	0,026448276
Plate Compactors	2014	6	15	Plate Compactors_2014_15	0,79	0,661	3,469	4,142	0,008	0,161	0,161	568,299	0,059	0,026448276
Plate Compactors	2015	6	15	Plate Compactors_2015_15	0,79	0,661	3,469	4,142	0,008	0,161	0,161	568,299	0,059	0,026448276
Plate Compactors	2016	6	15	Plate Compactors_2016_15	0,79	0,661	3,469	4,142	0,008	0,161	0,161	568,299	0,059	0,026448276
Plate Compactors	2017	6	15	Plate Compactors_2017_15	0,79	0,661	3,469	4,142	0,008	0,161	0,161	568,299	0,059	0,026448276
Plate Compactors	2018	6	15	Plate Compactors_2018_15	0,79	0,661	3,47	4,142	0,008	0,161	0,161	568,3	0,059	0,026448276

Plate Compactors	2019	6	15	Plate Compactors_2019_15	0,79	0,661	3,469	4,142	0,008	0,161	0,161	568,299	0,059	0,026448276
Plate Compactors	2020	6	15	Plate Compactors_2020_15	0,79	0,661	3,469	4,142	0,008	0,161	0,161	568,299	0,059	0,026448276
Plate Compactors	2021	6	15	Plate Compactors_2021_15	0,79	0,661	3,469	4,142	0,008	0,161	0,161	568,299	0,059	0,026448276
Plate Compactors	2022	6	15	Plate Compactors_2022_15	0,79	0,661	3,469	4,142	0,008	0,161	0,161	568,299	0,059	0,026448276
Plate Compactors	2023	6	15	Plate Compactors_2023_15	0,79	0,661	3,469	4,142	0,008	0,161	0,161	568,299	0,059	0,026448276
Plate Compactors	2024	6	15	Plate Compactors_2024_15	0,79	0,661	3,469	4,142	0,008	0,161	0,161	568,299	0,059	0,026448276
Plate Compactors	2025	6	15	Plate Compactors_2025_15	0,79	0,661	3,469	4,142	0,008	0,161	0,161	568,299	0,059	0,026448276
Plate Compactors	2030	6	15	Plate Compactors_2030_15	0,79	0,661	3,469	4,142	0,008	0,161	0,161	568,299	0,059	0,026448276
Plate Compactors	2035	6	15	Plate Compactors_2035_15	0,79	0,661	3,47	4,142	0,008	0,161	0,161	568,299	0,059	0,026448276
Plate Compactors	2040	6	15	Plate Compactors_2040_15	0,79	0,661	3,469	4,142	0,008	0,161	0,161	568,299	0,059	0,026448276
Pressure Washers	1990	6	15	Pressure Washers_1990_15	4,972	1,804	4,999	9,999	1,018	0,974	0,974	568,299	0,162	0,07262069
Pressure Washers	1990	16	25	Pressure Washers_1990_25	8,915	2,213	5	6,92	0,83	0,74	0,74	568,3	0,199	0,089206897
Pressure Washers	1990	26	50	Pressure Washers_1990_50	20,959	2,601	5,721	7,129	0,846	0,821	0,821	568,299	0,234	0,104896552
Pressure Washers	1990	51	120	Pressure Washers_1990_120	23,659	1,743	4,735	12,634	0,768	0,874	0,874	568,299	0,157	0,07037931
Pressure Washers	1990	121	175	Pressure Washers_1990_175	82,001	1,272	4,353	11,763	1,123	0,649	0,649	568,299	0,114	0,051103448
Pressure Washers	1990	176	250	Pressure Washers_1990_250	77,237	0,953	3,084	9,035	1,077	0,476	0,476	568,299	0,086	0,038551724
Pressure Washers	2000	6	15	Pressure Washers_2000_15	4,186	1,518	4,875	8,846	0,079	0,613	0,613	568,299	0,137	0,061413793
Pressure Washers	2000	16	25	Pressure Washers_2000_25	6,717	1,667	4,783	6,405	0,065	0,51	0,51	568,299	0,15	0,067241379
Pressure Washers	2000	26	50	Pressure Washers_2000_50	19,934	2,474	5,524	6,381	0,066	0,615	0,615	568,3	0,223	0,099965517
Pressure Washers	2000	51	120	Pressure Washers_2000_120	19,23	1,417	3,967	9,062	0,06	0,613	0,613	568,3	0,127	0,056931034
Pressure Washers	2000	121	175	Pressure Washers_2000_175	66,055	1,024	3,38	8,685	0,059	0,399	0,399	568,299	0,092	0,041241379
Pressure Washers	2000	176	250	Pressure Washers_2000_250	35,508	0,438	1,005	6,315	0,058	0,143	0,143	568,299	0,039	0,017482759
Pressure Washers	2005	6	15	Pressure Washers_2005_15	3,341	1,212	4,38	7,615	0,079	0,505	0,505	568,3	0,109	0,048862069
Pressure Washers	2005	16	25	Pressure Washers_2005_25	5,048	1,253	3,922	6,014	0,065	0,432	0,432	568,299	0,113	0,050655172
Pressure Washers	2005	26	50	Pressure Washers_2005_50	17,362	2,154	5,075	5,932	0,066	0,566	0,566	568,299	0,194	0,086965517
Pressure Washers	2005	51	120	Pressure Washers_2005_120	16,424	1,21	3,682	7,651	0,06	0,566	0,566	568,299	0,109	0,048862069
Pressure Washers	2005	121	175	Pressure Washers_2005_175	55,65	0,863	3,072	7,441	0,059	0,349	0,349	568,299	0,077	0,034517241
Pressure Washers	2005	176	250	Pressure Washers_2005_250	21,871	0,27	0,986	4,822	0,058	0,111	0,111	568,299	0,024	0,010758621
Pressure Washers	2010	6	15	Pressure Washers_2010_15	2,628	0,953	4,027	6,387	0,008	0,38	0,38	568,299	0,086	0,038551724
Pressure Washers	2010	16	25	Pressure Washers_2010_25	3,872	0,961	3,309	5,477	0,007	0,342	0,342	568,299	0,086	0,038551724
Pressure Washers	2010	26	50	Pressure Washers_2010_50	13,073	1,622	4,517	5,501	0,007	0,453	0,453	568,299	0,146	0,065448276
Pressure Washers	2010	51	120	Pressure Washers_2010_120	12,296	0,906	3,503	6,273	0,006	0,451	0,451	568,299	0,081	0,036310345
Pressure Washers	2010	121	175	Pressure Washers_2010_175	41,062	0,637	2,967	5,773	0,006	0,275	0,275	568,299	0,057	0,025551724
Pressure Washers	2010	176	250	Pressure Washers_2010_250	16,502	0,203	0,986	2,5	0,006	0,1	0,1	568,299	0,018	0,008068966
Pressure Washers	2011	6	15	Pressure Washers_2011_15	2,504	0,908	3,952	6,134	0,008	0,358	0,358	568,299	0,081	0,036310345
Pressure Washers	2011	16	25	Pressure Washers_2011_25	3,706	0,92	3,179	5,36	0,007	0,325	0,325	568,299	0,083	0,037206897
Pressure Washers	2011	26	50	Pressure Washers_2011_50	12,056	1,496	4,382	5,405	0,007	0,428	0,428	568,299	0,135	0,060517241
Pressure Washers	2011	51	120	Pressure Washers_2011_120	11,392	0,839	3,468	5,939	0,006	0,43	0,43	568,299	0,075	0,03362069
Pressure Washers	2011	121	175	Pressure Washers_2011_175	38,303	0,594	2,953	5,441	0,006	0,263	0,263	568,299	0,053	0,023758621
Pressure Washers	2011	176	250	Pressure Washers_2011_250	15,247	0,188	0,986	2,086	0,006	0,072	0,072	568,299	0,016	0,007172414
Pressure Washers	2012	6	15	Pressure Washers_2012_15	2,385	0,865	3,874	5,874	0,008	0,338	0,338	568,299	0,078	0,034965517
Pressure Washers	2012	16	25	Pressure Washers_2012_25	3,564	0,884	3,043	5,239	0,007	0,307	0,307	568,299	0,079	0,035413793
Pressure Washers	2012	26	50	Pressure Washers_2012_50	10,983	1,363	4,238	5,306	0,007	0,402	0,402	568,299	0,123	0,055137931
Pressure Washers	2012	51	120	Pressure Washers_2012_120	10,457	0,77	3,433	5,578	0,006	0,4	0,4	568,299	0,069	0,030931034
Pressure Washers	2012	121	175	Pressure Washers_2012_175	35,56	0,551	2,941	5,109	0,006	0,244	0,244	568,299	0,049	0,021965517
Pressure Washers	2012	176	250	Pressure Washers_2012_250	13,887	0,171	0,986	1,749	0,006	0,046	0,046	568,299	0,015	0,006724138
Pressure Washers	2013	6	15	Pressure Washers_2013_15	2,27	0,823	3,796	5,616	0,008	0,318	0,318	568,299	0,074	0,033172414
Pressure Washers	2013	16	25	Pressure Washers_2013_25	3,431	0,851	2,907	5,117	0,007	0,289	0,289	568,299	0,076	0,034068966
Pressure Washers	2013	26	50	Pressure Washers_2013_50	9,897	1,228	4,092	5,086	0,007	0,367	0,367	568,299	0,11	0,049310345
Pressure Washers	2013	51	120	Pressure Washers_2013_120	9,523	0,701	3,399	5,226	0,006	0,366	0,366	568,299	0,063	0,028241379
Pressure Washers	2013	121	175	Pressure Washers_2013_175	32,885	0,51	2,931	4,803	0,006	0,225	0,225	568,299	0,046	0,02062069
Pressure Washers	2013	176	250	Pressure Washers_2013_250	12,508	0,154	0,986	1,468	0,006	0,021	0,021	568,299	0,013	0,005827586
Pressure Washers	2014	6	15	Pressure Washers_2014_15	2,16	0,783	3,723	5,369	0,008	0,298	0,298	568,299	0,07	0,03137931
Pressure Washers	2014	16	25	Pressure Washers_2014_25	3,308	0,821	2,78	5	0,007	0,272	0,272	568,299	0,074	0,033172414
Pressure Washers	2014	26	50	Pressure Washers_2014_50	8,833	1,096	3,951	4,873	0,007	0,332	0,332	568,299	0,098	0,043931034
Pressure Washers	2014	51	120	Pressure Washers_2014_120	8,608	0,634	3,367	4,912	0,006	0,332	0,332	568,299	0,057	0,025551724
Pressure Washers	2014	121	175	Pressure Washers_2014_175	30,292	0,469	2,923	4,513	0,006	0,206	0,206	568,299	0,042	0,018827586
Pressure Washers	2014	176	250	Pressure Washers_2014_250	11,167	0,137	0,986	1,047	0,006	0,014	0,014	568,299	0,012	0,00537931
Pressure Washers	2015	6	15	Pressure Washers_2015_15	2,059	0,747	3,657	5,141	0,008	0,28	0,28	568,299	0,067	0,030034483
Pressure Washers	2015	16	25	Pressure Washers_2015_25	3,196	0,793	2,666	4,89	0,007	0,256	0,256	568,299	0,071	0,031827586
Pressure Washers	2015	26	50	Pressure Washers_2015_50	7,868	0,976	3,833	4,685	0,007	0,3	0,3	568,299	0,088	0,039448276
Pressure Washers	2015	51	120	Pressure Washers_2015_120	7,703	0,567	3,336	4,551	0,006	0,297	0,297	568,299	0,051	0,022862069
Pressure Washers	2015	121	175	Pressure Washers_2015_175	27,567	0,427	2,917	4,115	0,006	0,187	0,187	568,299	0,038	0,017034483
Pressure Washers	2015	176	250	Pressure Washers_2015_250	9,864	0,121	0,986	0,69	0,006	0,01	0,01	568,299	0,01	0,004482759
Pressure Washers	2016	6	15	Pressure Washers_2016_15	1,986	0,72	3,622	4,978	0,008	0,264	0,264	568,299	0,065	0,029137931
Pressure Washers	2016	16	25	Pressure Washers_2016_25	3,116	0,773	2,604	4,803	0,007	0,244	0,244	568,299	0,069	0,030931034
Pressure Washers	2016	26	50	Pressure Washers_2016_50	6,97	0,865	3,729	4,515	0,007	0,269	0,269	568,299	0,078	0,034965517
Pressure Washers	2016	51	120	Pressure Washers_2016_120	6,839	0,504	3,308	4,209	0,006	0,264	0,264	568,299	0,045	0,020172414
Pressure Washers	2016	121	175	Pressure Washers_2016_175	24,906	0,386	2,913	3,726	0,006	0,168	0,168	568,299	0,034	0,015241379
Pressure Washers	2016	176	250	Pressure Washers_2016_250	8,667	0,107	0,986	0,399	0,006	0,009	0,009	568,299	0,009	0,004034483
Pressure Washers	2017	6	15	Pressure Washers_2017_15	1,927	0,699	3,599	4,847	0,008	0,25	0,25	568,299	0,063	0,028241379
Pressure Washers	2017	16	25	Pressure Washers_2017_25	3,053	0,757	2,564	4,729	0,007	0,233	0,233	568,299	0,068	0,030482759
Pressure Washers	2017	26	50	Pressure Washers_2017_50	6,126	0,76	3,632	4,355	0,007	0,24	0,24	568,299	0,068	0,030482759

Pressure Washers	2017	51	120	Pressure Washers_2017_120	6,031	0,444	3,283	3,888	0,006	0,233	0,233	568,3	0,04	0,017931034
Pressure Washers	2017	121	175	Pressure Washers_2017_175	22,349	0,346	2,91	3,349	0,006	0,149	0,149	568,299	0,031	0,013896552
Pressure Washers	2017	176	250	Pressure Washers_2017_250	8,288	0,102	0,986	0,317	0,006	0,009	0,009	568,299	0,009	0,004034483
Pressure Washers	2018	6	15	Pressure Washers_2018_15	1,874	0,679	3,58	4,728	0,008	0,237	0,237	568,299	0,061	0,027344828
Pressure Washers	2018	16	25	Pressure Washers_2018_25	2,997	0,744	2,531	4,661	0,007	0,224	0,224	568,299	0,067	0,030034483
Pressure Washers	2018	26	50	Pressure Washers_2018_50	5,332	0,661	3,542	4,202	0,007	0,212	0,212	568,299	0,059	0,026448276
Pressure Washers	2018	51	120	Pressure Washers_2018_120	5,276	0,388	3,26	3,584	0,006	0,203	0,203	568,299	0,035	0,015689655
Pressure Washers	2018	121	175	Pressure Washers_2018_175	19,96	0,309	2,908	2,989	0,006	0,132	0,132	568,299	0,027	0,012103448
Pressure Washers	2018	176	250	Pressure Washers_2018_250	8,072	0,099	0,986	0,277	0,006	0,009	0,009	568,299	0,008	0,003586207
Pressure Washers	2019	6	15	Pressure Washers_2019_15	1,824	0,662	3,562	4,617	0,008	0,224	0,224	568,299	0,059	0,026448276
Pressure Washers	2019	16	25	Pressure Washers_2019_25	2,947	0,731	2,501	4,596	0,007	0,214	0,214	568,299	0,066	0,029586207
Pressure Washers	2019	26	50	Pressure Washers_2019_50	4,585	0,569	3,457	4,053	0,007	0,184	0,184	568,299	0,051	0,022862069
Pressure Washers	2019	51	120	Pressure Washers_2019_120	4,575	0,337	3,24	3,295	0,006	0,174	0,174	568,299	0,03	0,013448276
Pressure Washers	2019	121	175	Pressure Washers_2019_175	18,102	0,28	2,907	2,67	0,006	0,117	0,117	568,299	0,025	0,011206897
Pressure Washers	2019	176	250	Pressure Washers_2019_250	8,005	0,098	0,986	0,265	0,006	0,009	0,009	568,299	0,008	0,003586207
Pressure Washers	2020	6	15	Pressure Washers_2020_15	1,78	0,646	3,546	4,516	0,008	0,212	0,212	568,299	0,058	0,026
Pressure Washers	2020	16	25	Pressure Washers_2020_25	2,904	0,721	2,473	4,538	0,007	0,205	0,205	568,299	0,065	0,029137931
Pressure Washers	2020	26	50	Pressure Washers_2020_50	4,025	0,499	3,393	3,917	0,007	0,161	0,161	568,299	0,045	0,020172414
Pressure Washers	2020	51	120	Pressure Washers_2020_120	4,048	0,298	3,225	3,036	0,006	0,151	0,151	568,299	0,026	0,011655172
Pressure Washers	2020	121	175	Pressure Washers_2020_175	16,638	0,258	2,907	2,383	0,006	0,104	0,104	568,299	0,023	0,010310345
Pressure Washers	2020	176	250	Pressure Washers_2020_250	8,005	0,098	0,986	0,265	0,006	0,009	0,009	568,299	0,008	0,003586207
Pressure Washers	2021	6	15	Pressure Washers_2021_15	1,747	0,634	3,531	4,441	0,008	0,201	0,201	568,299	0,057	0,025551724
Pressure Washers	2021	16	25	Pressure Washers_2021_25	2,87	0,712	2,446	4,497	0,007	0,196	0,196	568,299	0,064	0,028689655
Pressure Washers	2021	26	50	Pressure Washers_2021_50	3,542	0,439	3,329	3,765	0,007	0,136	0,136	568,299	0,039	0,017482759
Pressure Washers	2021	51	120	Pressure Washers_2021_120	3,592	0,264	3,21	2,766	0,006	0,129	0,129	568,299	0,023	0,010310345
Pressure Washers	2021	121	175	Pressure Washers_2021_175	15,389	0,238	2,907	2,118	0,006	0,093	0,093	568,299	0,021	0,009413793
Pressure Washers	2021	176	250	Pressure Washers_2021_250	8,005	0,098	0,986	0,265	0,006	0,009	0,009	568,299	0,008	0,003586207
Pressure Washers	2022	6	15	Pressure Washers_2022_15	1,725	0,626	3,519	4,39	0,008	0,193	0,193	568,299	0,056	0,025103448
Pressure Washers	2022	16	25	Pressure Washers_2022_25	2,847	0,706	2,426	4,47	0,007	0,188	0,188	568,299	0,063	0,028241379
Pressure Washers	2022	26	50	Pressure Washers_2022_50	3,213	0,398	3,291	3,649	0,007	0,117	0,117	568,3	0,035	0,015689655
Pressure Washers	2022	51	120	Pressure Washers_2022_120	3,281	0,241	3,202	2,56	0,006	0,112	0,112	568,299	0,021	0,009413793
Pressure Washers	2022	121	175	Pressure Washers_2022_175	14,252	0,221	2,907	1,871	0,006	0,082	0,082	568,299	0,019	0,008517241
Pressure Washers	2022	176	250	Pressure Washers_2022_250	8,005	0,098	0,986	0,265	0,006	0,009	0,009	568,299	0,008	0,003586207
Pressure Washers	2023	6	15	Pressure Washers_2023_15	1,706	0,618	3,508	4,345	0,008	0,186	0,186	568,299	0,055	0,024655172
Pressure Washers	2023	16	25	Pressure Washers_2023_25	2,827	0,701	2,407	4,447	0,007	0,182	0,182	568,299	0,063	0,028241379
Pressure Washers	2023	26	50	Pressure Washers_2023_50	2,928	0,363	3,26	3,541	0,007	0,101	0,101	568,299	0,032	0,014344828
Pressure Washers	2023	51	120	Pressure Washers_2023_120	3,012	0,222	3,196	2,377	0,006	0,097	0,097	568,299	0,02	0,008965517
Pressure Washers	2023	121	175	Pressure Washers_2023_175	13,244	0,205	2,907	1,665	0,006	0,072	0,072	568,299	0,018	0,008068966
Pressure Washers	2023	176	250	Pressure Washers_2023_250	8,005	0,098	0,986	0,265	0,006	0,009	0,009	568,299	0,008	0,003586207
Pressure Washers	2024	6	15	Pressure Washers_2024_15	1,689	0,612	3,499	4,305	0,008	0,181	0,181	568,299	0,055	0,024655172
Pressure Washers	2024	16	25	Pressure Washers_2024_25	2,811	0,697	2,39	4,426	0,007	0,178	0,178	568,299	0,062	0,027793103
Pressure Washers	2024	26	50	Pressure Washers_2024_50	2,685	0,333	3,233	3,441	0,007	0,087	0,087	568,299	0,03	0,013448276
Pressure Washers	2024	51	120	Pressure Washers_2024_120	2,78	0,204	3,191	2,229	0,006	0,084	0,084	568,299	0,018	0,008068966
Pressure Washers	2024	121	175	Pressure Washers_2024_175	12,332	0,191	2,907	1,482	0,006	0,062	0,062	568,299	0,017	0,00762069
Pressure Washers	2024	176	250	Pressure Washers_2024_250	8,005	0,098	0,986	0,265	0,006	0,009	0,009	568,299	0,008	0,003586207
Pressure Washers	2025	6	15	Pressure Washers_2025_15	1,674	0,607	3,491	4,269	0,008	0,178	0,178	568,299	0,054	0,024206897
Pressure Washers	2025	16	25	Pressure Washers_2025_25	2,797	0,694	2,376	4,407	0,007	0,175	0,175	568,299	0,062	0,027793103
Pressure Washers	2025	26	50	Pressure Washers_2025_50	2,472	0,306	3,21	3,344	0,007	0,075	0,075	568,299	0,027	0,012103448
Pressure Washers	2025	51	120	Pressure Washers_2025_120	2,575	0,189	3,186	2,1	0,006	0,072	0,072	568,299	0,017	0,00762069
Pressure Washers	2025	121	175	Pressure Washers_2025_175	11,476	0,178	2,907	1,31	0,006	0,053	0,053	568,299	0,016	0,007172414
Pressure Washers	2025	176	250	Pressure Washers_2025_250	8,005	0,098	0,986	0,265	0,006	0,009	0,009	568,299	0,008	0,003586207
Pressure Washers	2030	6	15	Pressure Washers_2030_15	1,632	0,592	3,47	4,164	0,008	0,166	0,166	568,3	0,053	0,023758621
Pressure Washers	2030	16	25	Pressure Washers_2030_25	2,766	0,686	2,34	4,347	0,007	0,165	0,165	568,299	0,061	0,027344828
Pressure Washers	2030	26	50	Pressure Washers_2030_50	1,735	0,215	3,124	2,989	0,007	0,03	0,03	568,299	0,019	0,008517241
Pressure Washers	2030	51	120	Pressure Washers_2030_120	1,821	0,134	3,167	1,594	0,006	0,028	0,028	568,3	0,012	0,00537931
Pressure Washers	2030	121	175	Pressure Washers_2030_175	8,178	0,126	2,907	0,619	0,006	0,024	0,024	568,299	0,011	0,004931034
Pressure Washers	2030	176	250	Pressure Washers_2030_250	8,005	0,098	0,986	0,265	0,006	0,009	0,009	568,299	0,008	0,003586207
Pressure Washers	2035	6	15	Pressure Washers_2035_15	1,624	0,589	3,47	4,143	0,008	0,162	0,162	568,3	0,053	0,023758621
Pressure Washers	2035	16	25	Pressure Washers_2035_25	2,761	0,685	2,34	4,332	0,007	0,162	0,162	568,299	0,061	0,027344828
Pressure Washers	2035	26	50	Pressure Washers_2035_50	1,515	0,188	3,101	2,882	0,007	0,015	0,015	568,299	0,016	0,007172414
Pressure Washers	2035	51	120	Pressure Washers_2035_120	1,58	0,116	3,161	1,421	0,006	0,014	0,014	568,299	0,01	0,004482759
Pressure Washers	2035	121	175	Pressure Washers_2035_175	7,052	0,109	2,907	0,382	0,006	0,013	0,013	568,299	0,009	0,004034483
Pressure Washers	2035	176	250	Pressure Washers_2035_250	8,005	0,098	0,986	0,265	0,006	0,009	0,009	568,299	0,008	0,003586207
Pressure Washers	2040	6	15	Pressure Washers_2040_15	1,624	0,589	3,469	4,142	0,008	0,161	0,161	568,299	0,053	0,023758621
Pressure Washers	2040	16	25	Pressure Washers_2040_25	2,761	0,685	2,339	4,332	0,007	0,161	0,161	568,299	0,061	0,027344828
Pressure Washers	2040	26	50	Pressure Washers_2040_50	1,5	0,186	3,098	2,836	0,007	0,01	0,01	568,299	0,016	0,007172414
Pressure Washers	2040	51	120	Pressure Washers_2040_120	1,54	0,113	3,16	1,365	0,006	0,01	0,01	568,299	0,01	0,004482759
Pressure Washers	2040	121	175	Pressure Washers_2040_175	6,649	0,103	2,907	0,293	0,006	0,01	0,01	568,299	0,009	0,004034483
Pressure Washers	2040	176	250	Pressure Washers_2040_250	8,005	0,098	0,986	0,265	0,006	0,009	0,009	568,299	0,008	0,003586207
Pumps	1990	6	15	Pumps_1990_15	3,929	1,804	4,999	10	1,018	0,974	0,974	568,299	0,162	0,07262069
Pumps	1990	16	25	Pumps_1990_25	12,652	2,213	4,999	6,92	0,83	0,74	0,74	568,299	0,199	0,089206897
Pumps	1990	26	50	Pumps_1990_50	33,318	3,307	7,004	7,391	0,846	0,964	0,964	568,299	0,298	0,133586207
Pumps	1990	51	120	Pumps_1990_120	44,398	1,941	5,049	13,378	0,768	1,022	1,022	568,299	0,175	0,078448276

Pumps	1990	121	175	Pumps_1990_175	54,599	1,328	4,466	12,036	0,736	0,678	0,678	568,299	0,119	0,053344828
Pumps	1990	176	250	Pumps_1990_250	78,462	1,328	4,466	12,036	0,736	0,678	0,678	568,299	0,119	0,053344828
Pumps	1990	251	500	Pumps_1990_500	123,784	1,222	7,034	11,736	0,642	0,614	0,614	568,3	0,11	0,049310345
Pumps	1990	501	750	Pumps_1990_750	204,643	1,222	7,034	11,736	0,658	0,614	0,614	568,299	0,11	0,049310345
Pumps	1990	1001	9999	Pumps_1990_9999	484,933	1,22	7,034	11,736	0,658	0,612	0,612	568,299	0,11	0,049310345
Pumps	2000	6	15	Pumps_2000_15	3,754	1,723	4,875	9,08	0,079	0,747	0,747	568,299	0,155	0,069482759
Pumps	2000	16	25	Pumps_2000_25	11,979	2,095	4,783	6,405	0,065	0,569	0,569	568,299	0,189	0,084724138
Pumps	2000	26	50	Pumps_2000_50	31,461	3,123	6,715	6,608	0,066	0,718	0,718	568,299	0,281	0,125965517
Pumps	2000	51	120	Pumps_2000_120	36,02	1,575	4,223	9,604	0,06	0,711	0,711	568,3	0,142	0,063655172
Pumps	2000	121	175	Pumps_2000_175	43,406	1,055	3,435	8,734	0,057	0,419	0,419	568,299	0,095	0,042586207
Pumps	2000	176	250	Pumps_2000_250	51,67	0,874	2,707	8,397	0,057	0,339	0,339	568,299	0,078	0,034965517
Pumps	2000	251	500	Pumps_2000_500	83,09	0,82	3,956	8,188	0,05	0,311	0,311	568,299	0,074	0,033172414
Pumps	2000	501	750	Pumps_2000_750	137,368	0,82	3,956	8,188	0,051	0,311	0,311	568,299	0,074	0,033172414
Pumps	2000	1001	9999	Pumps_2000_9999	372,377	0,936	4,533	8,775	0,051	0,351	0,351	568,299	0,084	0,037655172
Pumps	2005	6	15	Pumps_2005_15	3,036	1,394	4,38	7,817	0,079	0,621	0,621	568,299	0,125	0,056034483
Pumps	2005	16	25	Pumps_2005_25	9,278	1,622	3,922	6,014	0,065	0,483	0,483	568,299	0,146	0,065448276
Pumps	2005	26	50	Pumps_2005_50	27,809	2,76	6,203	6,155	0,066	0,664	0,664	568,299	0,249	0,11162069
Pumps	2005	51	120	Pumps_2005_120	30,825	1,348	3,91	8,1	0,06	0,657	0,657	568,3	0,121	0,054241379
Pumps	2005	121	175	Pumps_2005_175	36,106	0,878	3,114	7,408	0,057	0,363	0,363	568,299	0,079	0,035413793
Pumps	2005	176	250	Pumps_2005_250	36,853	0,623	1,836	6,99	0,057	0,239	0,239	568,299	0,056	0,025103448
Pumps	2005	251	500	Pumps_2005_500	56,766	0,56	2,32	6,535	0,05	0,219	0,219	568,299	0,05	0,022413793
Pumps	2005	501	750	Pumps_2005_750	96,43	0,575	2,32	6,679	0,051	0,221	0,221	568,299	0,051	0,022862069
Pumps	2005	1001	9999	Pumps_2005_9999	289,357	0,728	2,838	7,658	0,051	0,258	0,258	568,299	0,065	0,029137931
Pumps	2010	6	15	Pumps_2010_15	2,449	1,124	4,027	6,554	0,008	0,473	0,473	568,299	0,101	0,045275862
Pumps	2010	16	25	Pumps_2010_25	7,245	1,267	3,309	5,477	0,007	0,384	0,384	568,299	0,114	0,051103448
Pumps	2010	26	50	Pumps_2010_50	22,041	2,188	5,634	5,74	0,007	0,545	0,545	568,3	0,197	0,088310345
Pumps	2010	51	120	Pumps_2010_120	23,77	1,039	3,735	6,675	0,006	0,538	0,538	568,299	0,093	0,041689655
Pumps	2010	121	175	Pumps_2010_175	28,171	0,685	3,033	5,961	0,006	0,298	0,298	568,299	0,061	0,027344828
Pumps	2010	176	250	Pumps_2010_250	26,273	0,444	1,359	5,586	0,006	0,17	0,17	568,299	0,04	0,017931034
Pumps	2010	251	500	Pumps_2010_500	40,384	0,398	1,536	5,074	0,005	0,158	0,158	568,299	0,035	0,015689655
Pumps	2010	501	750	Pumps_2010_750	68,724	0,41	1,536	5,207	0,005	0,161	0,161	568,299	0,037	0,016586207
Pumps	2010	1001	9999	Pumps_2010_9999	218,911	0,55	1,991	6,617	0,005	0,196	0,196	568,299	0,049	0,021965517
Pumps	2011	6	15	Pumps_2011_15	2,324	1,067	3,952	6,283	0,008	0,441	0,441	568,299	0,096	0,043034483
Pumps	2011	16	25	Pumps_2011_25	6,815	1,192	3,179	5,36	0,007	0,361	0,361	568,299	0,107	0,047965517
Pumps	2011	26	50	Pumps_2011_50	20,53	2,038	5,474	5,645	0,007	0,518	0,518	568,299	0,183	0,082034483
Pumps	2011	51	120	Pumps_2011_120	22,177	0,969	3,698	6,322	0,006	0,514	0,514	568,299	0,087	0,039
Pumps	2011	121	175	Pumps_2011_175	26,426	0,642	3,02	5,63	0,006	0,286	0,286	568,299	0,058	0,026
Pumps	2011	176	250	Pumps_2011_250	24,051	0,407	1,272	5,206	0,006	0,153	0,153	568,299	0,036	0,016137931
Pumps	2011	251	500	Pumps_2011_500	36,969	0,365	1,405	4,71	0,005	0,143	0,143	568,299	0,032	0,014344828
Pumps	2011	501	750	Pumps_2011_750	62,964	0,376	1,405	4,841	0,005	0,145	0,145	568,299	0,033	0,014793103
Pumps	2011	1001	9999	Pumps_2011_9999	203,755	0,512	1,835	6,273	0,005	0,183	0,183	568,299	0,046	0,02062069
Pumps	2012	6	15	Pumps_2012_15	2,194	1,007	3,874	5,999	0,008	0,407	0,407	568,299	0,09	0,040344828
Pumps	2012	16	25	Pumps_2012_25	6,363	1,113	3,043	5,239	0,007	0,337	0,337	568,299	0,1	0,044827586
Pumps	2012	26	50	Pumps_2012_50	18,887	1,875	5,296	5,545	0,007	0,488	0,488	568,299	0,169	0,075758621
Pumps	2012	51	120	Pumps_2012_120	20,51	0,896	3,66	5,939	0,006	0,481	0,481	568,299	0,08	0,035862069
Pumps	2012	121	175	Pumps_2012_175	24,576	0,597	3,009	5,28	0,006	0,265	0,265	568,299	0,053	0,023758621
Pumps	2012	176	250	Pumps_2012_250	22,301	0,377	1,218	4,846	0,006	0,139	0,139	568,299	0,034	0,015241379
Pumps	2012	251	500	Pumps_2012_500	34,322	0,338	1,311	4,367	0,005	0,13	0,13	568,299	0,03	0,013448276
Pumps	2012	501	750	Pumps_2012_750	58,469	0,349	1,311	4,495	0,005	0,132	0,132	568,299	0,031	0,013896552
Pumps	2012	1001	9999	Pumps_2012_9999	188,287	0,473	1,682	5,916	0,005	0,168	0,168	568,299	0,042	0,018827586
Pumps	2013	6	15	Pumps_2013_15	2,065	0,948	3,796	5,716	0,008	0,373	0,373	568,299	0,085	0,038103448
Pumps	2013	16	25	Pumps_2013_25	5,914	1,034	2,907	5,117	0,007	0,314	0,314	568,3	0,093	0,041689655
Pumps	2013	26	50	Pumps_2013_50	17,185	1,706	5,11	5,323	0,007	0,448	0,448	568,299	0,153	0,068586207
Pumps	2013	51	120	Pumps_2013_120	18,831	0,823	3,623	5,563	0,006	0,443	0,443	568,299	0,074	0,033172414
Pumps	2013	121	175	Pumps_2013_175	22,712	0,552	2,998	4,949	0,006	0,244	0,244	568,299	0,049	0,021965517
Pumps	2013	176	250	Pumps_2013_250	20,801	0,352	1,181	4,498	0,006	0,127	0,127	568,3	0,031	0,013896552
Pumps	2013	251	500	Pumps_2013_500	32,081	0,316	1,241	4,037	0,005	0,119	0,119	568,299	0,028	0,012551724
Pumps	2013	501	750	Pumps_2013_750	54,658	0,326	1,241	4,163	0,005	0,121	0,121	568,299	0,029	0,013
Pumps	2013	1001	9999	Pumps_2013_9999	173,151	0,435	1,538	5,558	0,005	0,154	0,154	568,299	0,039	0,017482759
Pumps	2014	6	15	Pumps_2014_15	1,942	0,891	3,723	5,445	0,008	0,341	0,341	568,299	0,08	0,035862069
Pumps	2014	16	25	Pumps_2014_25	5,492	0,96	2,78	5	0,007	0,291	0,291	568,299	0,086	0,038551724
Pumps	2014	26	50	Pumps_2014_50	15,493	1,538	4,929	5,107	0,007	0,409	0,409	568,299	0,138	0,061862069
Pumps	2014	51	120	Pumps_2014_120	17,179	0,751	3,587	5,226	0,006	0,403	0,403	568,299	0,067	0,030034483
Pumps	2014	121	175	Pumps_2014_175	20,895	0,508	2,989	4,635	0,006	0,222	0,222	568,299	0,045	0,020172414
Pumps	2014	176	250	Pumps_2014_250	19,3	0,326	1,149	4,09	0,006	0,115	0,115	568,299	0,029	0,013
Pumps	2014	251	500	Pumps_2014_500	29,829	0,294	1,181	3,648	0,005	0,108	0,108	568,299	0,026	0,011655172
Pumps	2014	501	750	Pumps_2014_750	50,824	0,303	1,181	3,77	0,005	0,11	0,11	568,299	0,027	0,012103448
Pumps	2014	1001	9999	Pumps_2014_9999	158,959	0,399	1,406	5,21	0,005	0,141	0,141	568,299	0,036	0,016137931
Pumps	2015	6	15	Pumps_2015_15	1,831	0,84	3,658	5,196	0,008	0,311	0,311	568,299	0,075	0,03362069
Pumps	2015	16	25	Pumps_2015_25	5,112	0,894	2,666	4,89	0,007	0,27	0,27	568,299	0,08	0,035862069
Pumps	2015	26	50	Pumps_2015_50	13,946	1,384	4,775	4,916	0,007	0,371	0,371	568,3	0,124	0,055586207
Pumps	2015	51	120	Pumps_2015_120	15,537	0,679	3,554	4,842	0,006	0,364	0,364	568,3	0,061	0,027344828
Pumps	2015	121	175	Pumps_2015_175	18,983	0,461	2,983	4,202	0,006	0,2	0,2	568,299	0,041	0,01837931

Pumps	2015	176	250	Pumps_2015_250	17,881	0,302	1,122	3,693	0,006	0,104	0,104	568,299	0,027	0,012103448
Pumps	2015	251	500	Pumps_2015_500	27,722	0,273	1,134	3,272	0,005	0,097	0,097	568,299	0,024	0,010758621
Pumps	2015	501	750	Pumps_2015_750	47,213	0,281	1,134	3,389	0,005	0,099	0,099	568,299	0,025	0,011206897
Pumps	2015	1001	9999	Pumps_2015_9999	144,304	0,363	1,293	4,878	0,005	0,127	0,127	568,299	0,032	0,014344828
Pumps	2016	6	15	Pumps_2016_15	1,762	0,809	3,622	5,023	0,008	0,289	0,289	568,299	0,073	0,032724138
Pumps	2016	16	25	Pumps_2016_25	4,893	0,855	2,604	4,803	0,007	0,255	0,255	568,299	0,077	0,034517241
Pumps	2016	26	50	Pumps_2016_50	12,497	1,24	4,64	4,742	0,007	0,335	0,335	568,299	0,111	0,049758621
Pumps	2016	51	120	Pumps_2016_120	13,964	0,61	3,523	4,478	0,006	0,325	0,325	568,299	0,055	0,024655172
Pumps	2016	121	175	Pumps_2016_175	17,155	0,417	2,978	3,789	0,006	0,179	0,179	568,299	0,037	0,016586207
Pumps	2016	176	250	Pumps_2016_250	16,558	0,28	1,099	3,313	0,006	0,094	0,094	568,299	0,025	0,011206897
Pumps	2016	251	500	Pumps_2016_500	25,804	0,254	1,093	2,919	0,005	0,088	0,088	568,299	0,022	0,009862069
Pumps	2016	501	750	Pumps_2016_750	43,884	0,262	1,093	3,028	0,005	0,089	0,089	568,299	0,023	0,010310345
Pumps	2016	1001	9999	Pumps_2016_9999	133,448	0,335	1,223	4,596	0,005	0,116	0,116	568,3	0,03	0,013448276
Pumps	2017	6	15	Pumps_2017_15	1,713	0,786	3,599	4,887	0,008	0,272	0,272	568,299	0,07	0,03137931
Pumps	2017	16	25	Pumps_2017_25	4,745	0,83	2,564	4,729	0,007	0,243	0,243	568,299	0,074	0,033172414
Pumps	2017	26	50	Pumps_2017_50	11,12	1,104	4,514	4,578	0,007	0,301	0,301	568,299	0,099	0,04437931
Pumps	2017	51	120	Pumps_2017_120	12,49	0,546	3,495	4,134	0,006	0,287	0,287	568,299	0,049	0,021965517
Pumps	2017	121	175	Pumps_2017_175	15,466	0,376	2,975	3,4	0,006	0,159	0,159	568,299	0,033	0,014793103
Pumps	2017	176	250	Pumps_2017_250	15,375	0,26	1,08	2,958	0,006	0,084	0,084	568,299	0,023	0,010310345
Pumps	2017	251	500	Pumps_2017_500	24,243	0,239	1,062	2,613	0,005	0,079	0,079	568,299	0,021	0,009413793
Pumps	2017	501	750	Pumps_2017_750	40,958	0,244	1,062	2,695	0,005	0,08	0,08	568,299	0,022	0,009862069
Pumps	2017	1001	9999	Pumps_2017_9999	124,604	0,313	1,177	4,343	0,005	0,106	0,106	568,299	0,028	0,012551724
Pumps	2018	6	15	Pumps_2018_15	1,669	0,766	3,58	4,762	0,008	0,256	0,256	568,299	0,069	0,030931034
Pumps	2018	16	25	Pumps_2018_25	4,618	0,807	2,531	4,661	0,007	0,232	0,232	568,299	0,072	0,032275862
Pumps	2018	26	50	Pumps_2018_50	9,809	0,973	4,397	4,422	0,007	0,267	0,267	568,299	0,087	0,039
Pumps	2018	51	120	Pumps_2018_120	11,107	0,485	3,471	3,808	0,006	0,252	0,252	568,299	0,043	0,019275862
Pumps	2018	121	175	Pumps_2018_175	13,918	0,338	2,974	3,035	0,006	0,14	0,14	568,299	0,03	0,013448276
Pumps	2018	176	250	Pumps_2018_250	14,304	0,242	1,065	2,624	0,006	0,075	0,075	568,299	0,021	0,009413793
Pumps	2018	251	500	Pumps_2018_500	22,927	0,226	1,041	2,34	0,005	0,071	0,071	568,299	0,02	0,008965517
Pumps	2018	501	750	Pumps_2018_750	38,511	0,23	1,041	2,401	0,005	0,072	0,072	568,299	0,02	0,008965517
Pumps	2018	1001	9999	Pumps_2018_9999	116,529	0,293	1,144	4,105	0,005	0,098	0,098	568,299	0,026	0,011655172
Pumps	2019	6	15	Pumps_2019_15	1,63	0,748	3,562	4,647	0,008	0,241	0,241	568,3	0,067	0,030034483
Pumps	2019	16	25	Pumps_2019_25	4,503	0,787	2,501	4,596	0,007	0,222	0,222	568,3	0,071	0,031827586
Pumps	2019	26	50	Pumps_2019_50	8,56	0,849	4,284	4,269	0,007	0,235	0,235	568,299	0,076	0,034068966
Pumps	2019	51	120	Pumps_2019_120	9,812	0,429	3,449	3,497	0,006	0,217	0,217	568,299	0,038	0,017034483
Pumps	2019	121	175	Pumps_2019_175	12,706	0,309	2,974	2,711	0,006	0,124	0,124	568,299	0,027	0,012103448
Pumps	2019	176	250	Pumps_2019_250	13,378	0,226	1,052	2,323	0,006	0,067	0,067	568,299	0,02	0,008965517
Pumps	2019	251	500	Pumps_2019_500	21,711	0,214	1,027	2,084	0,005	0,064	0,064	568,3	0,019	0,008517241
Pumps	2019	501	750	Pumps_2019_750	36,35	0,217	1,027	2,133	0,005	0,065	0,065	568,299	0,019	0,008517241
Pumps	2019	1001	9999	Pumps_2019_9999	108,825	0,273	1,118	3,873	0,005	0,089	0,089	568,299	0,024	0,010758621
Pumps	2020	6	15	Pumps_2020_15	1,593	0,731	3,546	4,542	0,008	0,227	0,227	568,299	0,066	0,029586207
Pumps	2020	16	25	Pumps_2020_25	4,396	0,769	2,473	4,538	0,007	0,212	0,212	568,299	0,069	0,030931034
Pumps	2020	26	50	Pumps_2020_50	7,613	0,755	4,197	4,128	0,007	0,206	0,206	568,299	0,068	0,030482759
Pumps	2020	51	120	Pumps_2020_120	8,832	0,386	3,432	3,219	0,006	0,189	0,189	568,299	0,034	0,015241379
Pumps	2020	121	175	Pumps_2020_175	11,744	0,285	2,974	2,418	0,006	0,111	0,111	568,299	0,025	0,011206897
Pumps	2020	176	250	Pumps_2020_250	12,575	0,212	1,042	2,05	0,006	0,06	0,06	568,299	0,019	0,008517241
Pumps	2020	251	500	Pumps_2020_500	20,565	0,203	1,017	1,841	0,005	0,057	0,057	568,3	0,018	0,008068966
Pumps	2020	501	750	Pumps_2020_750	34,373	0,205	1,017	1,884	0,005	0,058	0,058	568,299	0,018	0,008068966
Pumps	2020	1001	9999	Pumps_2020_9999	101,462	0,255	1,096	3,649	0,005	0,081	0,081	568,3	0,023	0,010310345
Pumps	2021	6	15	Pumps_2021_15	1,563	0,717	3,531	4,462	0,008	0,214	0,214	568,299	0,064	0,028689655
Pumps	2021	16	25	Pumps_2021_25	4,302	0,752	2,446	4,497	0,007	0,201	0,201	568,299	0,067	0,030034483
Pumps	2021	26	50	Pumps_2021_50	6,761	0,671	4,099	3,966	0,007	0,175	0,175	568,299	0,06	0,026896552
Pumps	2021	51	120	Pumps_2021_120	7,94	0,347	3,412	2,928	0,006	0,162	0,162	568,3	0,031	0,013896552
Pumps	2021	121	175	Pumps_2021_175	10,713	0,26	2,968	2,101	0,006	0,096	0,096	568,299	0,023	0,010310345
Pumps	2021	176	250	Pumps_2021_250	11,658	0,197	1,031	1,759	0,006	0,052	0,052	568,299	0,017	0,00762069
Pumps	2021	251	500	Pumps_2021_500	19,186	0,189	1,007	1,584	0,005	0,05	0,05	568,299	0,017	0,00762069
Pumps	2021	501	750	Pumps_2021_750	32,005	0,191	1,007	1,618	0,005	0,05	0,05	568,299	0,017	0,00762069
Pumps	2021	1001	9999	Pumps_2021_9999	92,954	0,233	1,074	3,409	0,005	0,072	0,072	568,3	0,021	0,009413793
Pumps	2022	6	15	Pumps_2022_15	1,54	0,707	3,519	4,408	0,008	0,203	0,203	568,299	0,063	0,028241379
Pumps	2022	16	25	Pumps_2022_25	4,229	0,739	2,426	4,47	0,007	0,193	0,193	568,299	0,066	0,029586207
Pumps	2022	26	50	Pumps_2022_50	6,194	0,614	4,048	3,846	0,007	0,152	0,152	568,299	0,055	0,024655172
Pumps	2022	51	120	Pumps_2022_120	7,351	0,321	3,404	2,708	0,006	0,142	0,142	568,299	0,029	0,013
Pumps	2022	121	175	Pumps_2022_175	9,985	0,242	2,969	1,86	0,006	0,085	0,085	568,299	0,021	0,009413793
Pumps	2022	176	250	Pumps_2022_250	11,025	0,186	1,025	1,534	0,006	0,045	0,045	568,299	0,016	0,007172414
Pumps	2022	251	500	Pumps_2022_500	18,249	0,18	1,001	1,404	0,005	0,044	0,044	568,3	0,016	0,007172414
Pumps	2022	501	750	Pumps_2022_750	30,396	0,181	1,001	1,432	0,005	0,044	0,044	568,3	0,016	0,007172414
Pumps	2022	1001	9999	Pumps_2022_9999	87,313	0,219	1,058	3,236	0,005	0,065	0,065	568,299	0,019	0,008517241
Pumps	2023	6	15	Pumps_2023_15	1,521	0,698	3,508	4,359	0,008	0,194	0,194	568,299	0,063	0,028241379
Pumps	2023	16	25	Pumps_2023_25	4,165	0,728	2,407	4,447	0,007	0,186	0,186	568,299	0,065	0,029137931
Pumps	2023	26	50	Pumps_2023_50	5,699	0,565	4,007	3,734	0,007	0,131	0,131	568,299	0,051	0,022862069
Pumps	2023	51	120	Pumps_2023_120	6,838	0,299	3,398	2,511	0,006	0,123	0,123	568,299	0,026	0,011655172
Pumps	2023	121	175	Pumps_2023_175	9,349	0,227	2,971	1,662	0,006	0,075	0,075	568,299	0,02	0,008965517
Pumps	2023	176	250	Pumps_2023_250	10,47	0,177	1,021	1,351	0,006	0,04	0,04	568,299	0,015	0,006724138

Pumps	2023	251	500	Pumps_2023_500	17,411	0,171	0,998	1,246	0,005	0,038	0,038	568,3	0,015	0,006724138
Pumps	2023	501	750	Pumps_2023_750	28,971	0,173	0,998	1,271	0,005	0,039	0,039	568,299	0,015	0,006724138
Pumps	2023	1001	9999	Pumps_2023_9999	82,523	0,207	1,043	3,09	0,005	0,059	0,059	568,299	0,018	0,008068966
Pumps	2024	6	15	Pumps_2024_15	1,503	0,69	3,499	4,316	0,008	0,188	0,188	568,299	0,062	0,027793103
Pumps	2024	16	25	Pumps_2024_25	4,107	0,718	2,39	4,426	0,007	0,181	0,181	568,299	0,064	0,028689655
Pumps	2024	26	50	Pumps_2024_50	5,272	0,523	3,974	3,63	0,007	0,114	0,114	568,299	0,047	0,021068966
Pumps	2024	51	120	Pumps_2024_120	6,391	0,279	3,393	2,352	0,006	0,107	0,107	568,299	0,025	0,011206897
Pumps	2024	121	175	Pumps_2024_175	8,769	0,213	2,973	1,486	0,006	0,065	0,065	568,299	0,019	0,008517241
Pumps	2024	176	250	Pumps_2024_250	9,948	0,168	1,018	1,189	0,006	0,034	0,034	568,3	0,015	0,006724138
Pumps	2024	251	500	Pumps_2024_500	16,61	0,164	0,994	1,098	0,005	0,033	0,033	568,299	0,014	0,006275862
Pumps	2024	501	750	Pumps_2024_750	27,614	0,164	0,994	1,12	0,005	0,034	0,034	568,299	0,014	0,006275862
Pumps	2024	1001	9999	Pumps_2024_9999	78,184	0,196	1,031	2,96	0,005	0,054	0,054	568,299	0,017	0,00762069
Pumps	2025	6	15	Pumps_2025_15	1,488	0,683	3,491	4,278	0,008	0,183	0,183	568,299	0,061	0,027344828
Pumps	2025	16	25	Pumps_2025_25	4,058	0,709	2,376	4,407	0,007	0,177	0,177	568,299	0,064	0,028689655
Pumps	2025	26	50	Pumps_2025_50	4,891	0,485	3,943	3,528	0,007	0,099	0,099	568,299	0,043	0,019275862
Pumps	2025	51	120	Pumps_2025_120	5,988	0,261	3,389	2,213	0,006	0,092	0,092	568,299	0,023	0,010310345
Pumps	2025	121	175	Pumps_2025_175	8,209	0,199	2,974	1,318	0,006	0,056	0,056	568,3	0,018	0,008068966
Pumps	2025	176	250	Pumps_2025_250	9,449	0,159	1,016	1,038	0,006	0,029	0,029	568,299	0,014	0,006275862
Pumps	2025	251	500	Pumps_2025_500	15,837	0,156	0,992	0,958	0,005	0,028	0,028	568,3	0,014	0,006275862
Pumps	2025	501	750	Pumps_2025_750	26,308	0,157	0,992	0,977	0,005	0,029	0,029	568,3	0,014	0,006275862
Pumps	2025	1001	9999	Pumps_2025_9999	74,054	0,186	1,02	2,84	0,005	0,049	0,049	568,299	0,016	0,007172414
Pumps	2030	6	15	Pumps_2030_15	1,445	0,663	3,47	4,164	0,008	0,166	0,166	568,299	0,059	0,026448276
Pumps	2030	16	25	Pumps_2030_25	3,928	0,687	2,34	4,347	0,007	0,165	0,165	568,3	0,061	0,027344828
Pumps	2030	26	50	Pumps_2030_50	3,513	0,348	3,814	3,146	0,007	0,04	0,04	568,299	0,031	0,013896552
Pumps	2030	51	120	Pumps_2030_120	4,416	0,193	3,367	1,662	0,006	0,036	0,036	568,299	0,017	0,00762069
Pumps	2030	121	175	Pumps_2030_175	5,842	0,142	2,973	0,61	0,006	0,024	0,024	568,299	0,012	0,00537931
Pumps	2030	176	250	Pumps_2030_250	7,699	0,13	1,013	0,511	0,006	0,016	0,016	568,299	0,011	0,004931034
Pumps	2030	251	500	Pumps_2030_500	13,115	0,129	0,989	0,482	0,005	0,016	0,016	568,299	0,011	0,004931034
Pumps	2030	501	750	Pumps_2030_750	21,709	0,129	0,989	0,488	0,005	0,016	0,016	568,299	0,011	0,004931034
Pumps	2030	1001	9999	Pumps_2030_9999	55,475	0,139	0,99	2,504	0,005	0,03	0,03	568,299	0,012	0,00537931
Pumps	2035	6	15	Pumps_2035_15	1,44	0,661	3,469	4,143	0,008	0,162	0,162	568,299	0,059	0,026448276
Pumps	2035	16	25	Pumps_2035_25	3,919	0,685	2,34	4,332	0,007	0,162	0,162	568,299	0,061	0,027344828
Pumps	2035	26	50	Pumps_2035_50	3,089	0,306	3,778	3,028	0,007	0,019	0,019	568,299	0,027	0,012103448
Pumps	2035	51	120	Pumps_2035_120	3,891	0,17	3,36	1,47	0,006	0,017	0,017	568,299	0,015	0,006724138
Pumps	2035	121	175	Pumps_2035_175	5,059	0,123	2,973	0,377	0,006	0,014	0,014	568,299	0,011	0,004931034
Pumps	2035	176	250	Pumps_2035_250	7,07	0,119	1,012	0,335	0,006	0,011	0,011	568,299	0,01	0,004482759
Pumps	2035	251	500	Pumps_2035_500	12,118	0,119	0,989	0,331	0,005	0,011	0,011	568,299	0,01	0,004482759
Pumps	2035	501	750	Pumps_2035_750	20,034	0,119	0,989	0,331	0,005	0,011	0,011	568,299	0,01	0,004482759
Pumps	2035	1001	9999	Pumps_2035_9999	49,373	0,124	0,989	2,38	0,005	0,023	0,023	568,299	0,011	0,004931034
Pumps	2040	6	15	Pumps_2040_15	1,44	0,661	3,469	4,142	0,008	0,161	0,161	568,299	0,059	0,026448276
Pumps	2040	16	25	Pumps_2040_25	3,919	0,685	2,339	4,332	0,007	0,161	0,161	568,299	0,061	0,027344828
Pumps	2040	26	50	Pumps_2040_50	3,056	0,303	3,77	2,976	0,007	0,013	0,013	568,299	0,027	0,012103448
Pumps	2040	51	120	Pumps_2040_120	3,777	0,165	3,358	1,41	0,006	0,012	0,012	568,299	0,014	0,006275862
Pumps	2040	121	175	Pumps_2040_175	4,771	0,116	2,971	0,295	0,006	0,01	0,01	568,299	0,01	0,004482759
Pumps	2040	176	250	Pumps_2040_250	6,779	0,114	1,012	0,279	0,006	0,009	0,009	568,299	0,01	0,004482759
Pumps	2040	251	500	Pumps_2040_500	11,622	0,114	0,989	0,279	0,005	0,009	0,009	568,299	0,01	0,004482759
Pumps	2040	501	750	Pumps_2040_750	19,214	0,114	0,989	0,279	0,005	0,009	0,009	568,299	0,01	0,004482759
Pumps	2040	1001	9999	Pumps_2040_9999	46,343	0,116	0,989	2,347	0,005	0,02	0,02	568,299	0,01	0,004482759
Rollers	1990	6	15	Rollers_1990_15	4,21	1,804	4,999	9,999	1,049	0,975	0,975	568,299	0,162	0,07262069
Rollers	1990	16	25	Rollers_1990_25	10,903	2,213	4,999	6,919	0,855	0,741	0,741	568,299	0,199	0,089206897
Rollers	1990	26	50	Rollers_1990_50	45,466	4,738	9,598	7,927	0,871	1,256	1,256	568,299	0,427	0,191413793
Rollers	1990	51	120	Rollers_1990_120	51,677	2,372	5,756	15,111	0,791	1,332	1,332	568,3	0,214	0,095931034
Rollers	1990	121	175	Rollers_1990_175	75,451	1,889	5,165	14,858	0,758	1,046	1,046	568,299	0,17	0,076206897
Rollers	1990	176	250	Rollers_1990_250	106,808	1,889	5,165	14,858	0,758	1,046	1,046	568,299	0,17	0,076206897
Rollers	1990	251	500	Rollers_1990_500	135,093	1,669	11,266	14,103	0,662	0,896	0,896	568,299	0,15	0,067241379
Rollers	2000	6	15	Rollers_2000_15	3,444	1,475	4,49	8,242	0,079	0,676	0,676	568,3	0,133	0,05962069
Rollers	2000	16	25	Rollers_2000_25	9,648	1,958	4,53	6,358	0,065	0,563	0,563	568,299	0,176	0,078896552
Rollers	2000	26	50	Rollers_2000_50	38,643	4,027	8,379	6,941	0,066	0,861	0,861	568,299	0,363	0,162724138
Rollers	2000	51	120	Rollers_2000_120	39,062	1,793	4,585	10,425	0,06	0,844	0,844	568,299	0,161	0,072172414
Rollers	2000	121	175	Rollers_2000_175	48,357	1,21	3,749	9,501	0,057	0,503	0,503	568,299	0,109	0,048862069
Rollers	2000	176	250	Rollers_2000_250	59,24	1,047	3,108	9,211	0,057	0,427	0,427	568,299	0,094	0,042137931
Rollers	2000	251	500	Rollers_2000_500	77,413	0,956	5,254	8,821	0,05	0,379	0,379	568,299	0,086	0,038551724
Rollers	2005	6	15	Rollers_2005_15	1,788	0,766	3,469	5,228	0,079	0,361	0,361	568,299	0,069	0,030931034
Rollers	2005	16	25	Rollers_2005_25	4,53	0,919	2,642	5,412	0,065	0,347	0,347	568,299	0,082	0,036758621
Rollers	2005	26	50	Rollers_2005_50	34,997	3,647	7,864	6,51	0,066	0,808	0,808	568,299	0,329	0,147482759
Rollers	2005	51	120	Rollers_2005_120	34,046	1,563	4,289	8,963	0,06	0,79	0,79	568,299	0,141	0,063206897
Rollers	2005	121	175	Rollers_2005_175	40,854	1,023	3,44	8,18	0,057	0,441	0,441	568,299	0,092	0,041241379
Rollers	2005	176	250	Rollers_2005_250	44,594	0,788	2,262	7,822	0,057	0,319	0,319	568,299	0,071	0,031827586
Rollers	2005	251	500	Rollers_2005_500	56,466	0,697	3,183	7,196	0,05	0,282	0,282	568,299	0,062	0,027793103
Rollers	2010	6	15	Rollers_2010_15	1,637529	1,376	5,19619	5,58863	0,005	0,516	0,475	584,6125	0,17	0,076206897
Rollers	2010	16	25	Rollers_2010_25	1,637529	1,376	5,19619	5,58863	0,005	0,516	0,475	584,6125	0,17	0,076206897
Rollers	2010	26	50	Rollers_2010_50	1,637529	1,376	5,19619	5,58863	0,005	0,516	0,475	584,6125	0,17	0,076206897
Rollers	2010	51	120	Rollers_2010_120	0,983879	0,827	3,91429	7,50147	0,005	0,56	0,516	527,6279	0,154	0,069034483

Rollers	2010	121	175	Rollers_2010_175	0,511697	0,43	3,00505	5,60543	0,005	0,264	0,243	524,1952	0,153	0,068586207
Rollers	2010	176	250	Rollers_2010_250	0,616159	0,518	2,19572	7,34127	0,005	0,268	0,247	526,2539	0,153	0,068586207
Rollers	2010	251	500	Rollers_2010_500	0,682816	0,574	4,92169	7,52047	0,005	0,313	0,288	533,878	0,155	0,069482759
Rollers	2011	6	15	Rollers_2011_15	1,599963	1,344	5,18315	5,5647	0,005	0,508	0,467	583,1085	0,17	0,076206897
Rollers	2011	16	25	Rollers_2011_25	1,599963	1,344	5,18315	5,5647	0,005	0,508	0,467	583,1085	0,17	0,076206897
Rollers	2011	26	50	Rollers_2011_50	1,599963	1,344	5,18315	5,5647	0,005	0,508	0,467	583,1085	0,17	0,076206897
Rollers	2011	51	120	Rollers_2011_120	0,924436	0,777	3,86451	7,13388	0,005	0,533	0,491	525,9391	0,153	0,068586207
Rollers	2011	121	175	Rollers_2011_175	0,498798	0,419	3,00845	5,44712	0,005	0,257	0,237	522,9396	0,153	0,068586207
Rollers	2011	176	250	Rollers_2011_250	0,556319	0,467	2,03431	6,69107	0,005	0,242	0,222	524,8924	0,153	0,068586207
Rollers	2011	251	500	Rollers_2011_500	0,597293	0,502	4,46947	6,64358	0,005	0,275	0,253	529,5965	0,155	0,069482759
Rollers	2012	6	15	Rollers_2012_15	1,624226	1,365	5,26844	5,568	0,005	0,511	0,471	581,6678	0,17	0,076206897
Rollers	2012	16	25	Rollers_2012_25	1,624226	1,365	5,26844	5,568	0,005	0,511	0,471	581,6678	0,17	0,076206897
Rollers	2012	26	50	Rollers_2012_50	1,624226	1,365	5,26844	5,568	0,005	0,511	0,471	581,6678	0,17	0,076206897
Rollers	2012	51	120	Rollers_2012_120	0,924087	0,776	3,87893	7,08604	0,005	0,534	0,491	524,5269	0,153	0,068586207
Rollers	2012	121	175	Rollers_2012_175	0,497788	0,418	3,02294	5,38313	0,005	0,255	0,235	521,5511	0,153	0,068586207
Rollers	2012	176	250	Rollers_2012_250	0,555818	0,467	2,02691	6,64215	0,005	0,241	0,222	523,5608	0,153	0,068586207
Rollers	2012	251	500	Rollers_2012_500	0,604557	0,508	4,53336	6,66671	0,005	0,278	0,256	528,1357	0,155	0,069482759
Rollers	2013	6	15	Rollers_2013_15	1,5981	1,343	5,27142	5,50162	0,005	0,5	0,46	578,8662	0,17	0,076206897
Rollers	2013	16	25	Rollers_2013_25	1,5981	1,343	5,27142	5,50162	0,005	0,5	0,46	578,8662	0,17	0,076206897
Rollers	2013	26	50	Rollers_2013_50	1,5981	1,343	5,27142	5,50162	0,005	0,5	0,46	578,8662	0,17	0,076206897
Rollers	2013	51	120	Rollers_2013_120	0,873627	0,734	3,84356	6,74964	0,005	0,504	0,464	521,8163	0,153	0,068586207
Rollers	2013	121	175	Rollers_2013_175	0,468308	0,394	3,00794	5,11335	0,005	0,238	0,219	519,0689	0,153	0,068586207
Rollers	2013	176	250	Rollers_2013_250	0,495332	0,416	1,86858	5,94235	0,005	0,213	0,196	520,4083	0,153	0,068586207
Rollers	2013	251	500	Rollers_2013_500	0,470274	0,395	3,53436	5,43748	0,005	0,213	0,196	524,7654	0,154	0,069034483
Rollers	2014	6	15	Rollers_2014_15	1,556684	1,308	5,24275	5,39309	0,005	0,484	0,445	575,7953	0,17	0,076206897
Rollers	2014	16	25	Rollers_2014_25	1,556684	1,308	5,24275	5,39309	0,005	0,484	0,445	575,7953	0,17	0,076206897
Rollers	2014	26	50	Rollers_2014_50	1,556684	1,308	5,24275	5,39309	0,005	0,484	0,445	575,7953	0,17	0,076206897
Rollers	2014	51	120	Rollers_2014_120	0,827072	0,695	3,80915	6,39036	0,005	0,476	0,438	518,7866	0,153	0,068586207
Rollers	2014	121	175	Rollers_2014_175	0,43778	0,368	2,99804	4,72375	0,005	0,219	0,202	516,591	0,153	0,068586207
Rollers	2014	176	250	Rollers_2014_250	0,453642	0,381	1,75988	5,40344	0,005	0,191	0,176	517,8111	0,153	0,068586207
Rollers	2014	251	500	Rollers_2014_500	0,449616	0,378	3,3182	5,18322	0,005	0,202	0,185	522,0518	0,154	0,069034483
Rollers	2015	6	15	Rollers_2015_15	1,559602	1,31	5,29043	5,36547	0,005	0,481	0,443	569,9207	0,17	0,076206897
Rollers	2015	16	25	Rollers_2015_25	1,559602	1,31	5,29043	5,36547	0,005	0,481	0,443	569,9207	0,17	0,076206897
Rollers	2015	26	50	Rollers_2015_50	1,559602	1,31	5,29043	5,36547	0,005	0,481	0,443	569,9207	0,17	0,076206897
Rollers	2015	51	120	Rollers_2015_120	0,813228	0,683	3,80891	6,27158	0,005	0,467	0,43	513,5052	0,153	0,068586207
Rollers	2015	121	175	Rollers_2015_175	0,433087	0,364	3,00605	4,63035	0,005	0,215	0,198	511,3935	0,153	0,068586207
Rollers	2015	176	250	Rollers_2015_250	0,41293	0,347	1,65049	4,93191	0,005	0,171	0,157	512,8234	0,153	0,068586207
Rollers	2015	251	500	Rollers_2015_500	0,441373	0,371	3,24549	5,03147	0,005	0,195	0,179	517,2848	0,154	0,069034483
Rollers	2016	6	15	Rollers_2016_15	1,498736	1,259	5,23066	5,2356	0,005	0,459	0,423	563,9722	0,17	0,076206897
Rollers	2016	16	25	Rollers_2016_25	1,498736	1,259	5,23066	5,2356	0,005	0,459	0,423	563,9722	0,17	0,076206897
Rollers	2016	26	50	Rollers_2016_50	1,498736	1,259	5,23066	5,2356	0,005	0,459	0,423	563,9722	0,17	0,076206897
Rollers	2016	51	120	Rollers_2016_120	0,747631	0,628	3,75537	5,80563	0,005	0,428	0,393	508,1987	0,153	0,068586207
Rollers	2016	121	175	Rollers_2016_175	0,402004	0,338	2,99334	4,23872	0,005	0,197	0,181	505,9041	0,153	0,068586207
Rollers	2016	176	250	Rollers_2016_250	0,366563	0,308	1,50673	4,39492	0,005	0,15	0,138	507,6939	0,153	0,068586207
Rollers	2016	251	500	Rollers_2016_500	0,397483	0,334	2,95647	4,45617	0,005	0,173	0,159	513,4154	0,155	0,069482759
Rollers	2017	6	15	Rollers_2017_15	1,425352	1,198	5,14727	5,09771	0,005	0,436	0,401	555,0199	0,17	0,076206897
Rollers	2017	16	25	Rollers_2017_25	1,425352	1,198	5,14727	5,09771	0,005	0,436	0,401	555,0199	0,17	0,076206897
Rollers	2017	26	50	Rollers_2017_50	1,425352	1,198	5,14727	5,09771	0,005	0,436	0,401	555,0199	0,17	0,076206897
Rollers	2017	51	120	Rollers_2017_120	0,690109	0,58	3,71315	5,4114	0,005	0,392	0,361	500,1525	0,153	0,068586207
Rollers	2017	121	175	Rollers_2017_175	0,373471	0,314	2,98069	3,87384	0,005	0,18	0,166	497,9088	0,153	0,068586207
Rollers	2017	176	250	Rollers_2017_250	0,326364	0,274	1,40849	3,92097	0,005	0,129	0,119	499,7021	0,153	0,068586207
Rollers	2017	251	500	Rollers_2017_500	0,353236	0,297	2,68487	3,84047	0,005	0,15	0,138	505,8318	0,155	0,069482759
Rollers	2018	6	15	Rollers_2018_15	1,26668	1,064	4,92335	4,8416	0,005	0,387	0,356	546,2905	0,17	0,076206897
Rollers	2018	16	25	Rollers_2018_25	1,26668	1,064	4,92335	4,8416	0,005	0,387	0,356	546,2905	0,17	0,076206897
Rollers	2018	26	50	Rollers_2018_50	1,26668	1,064	4,92335	4,8416	0,005	0,387	0,356	546,2905	0,17	0,076206897
Rollers	2018	51	120	Rollers_2018_120	0,572467	0,481	3,60981	4,65049	0,005	0,32	0,294	492,2118	0,153	0,068586207
Rollers	2018	121	175	Rollers_2018_175	0,315632	0,265	2,94895	3,18126	0,005	0,147	0,135	490,1805	0,153	0,068586207
Rollers	2018	176	250	Rollers_2018_250	0,251419	0,211	1,24341	2,99492	0,005	0,094	0,086	491,6643	0,153	0,068586207
Rollers	2018	251	500	Rollers_2018_500	0,291314	0,245	2,23145	3,09814	0,005	0,119	0,11	497,9962	0,155	0,069482759
Rollers	2019	6	15	Rollers_2019_15	1,156606	0,972	4,77841	4,64491	0,005	0,349	0,321	537,546	0,17	0,076206897
Rollers	2019	16	25	Rollers_2019_25	1,156606	0,972	4,77841	4,64491	0,005	0,349	0,321	537,546	0,17	0,076206897
Rollers	2019	26	50	Rollers_2019_50	1,156606	0,972	4,77841	4,64491	0,005	0,349	0,321	537,546	0,17	0,076206897
Rollers	2019	51	120	Rollers_2019_120	0,502836	0,423	3,55726	4,17949	0,005	0,275	0,253	484,3362	0,153	0,068586207
Rollers	2019	121	175	Rollers_2019_175	0,27475	0,231	2,93251	2,69941	0,005	0,124	0,114	482,4531	0,153	0,068586207
Rollers	2019	176	250	Rollers_2019_250	0,250477	0,21	1,24854	2,88327	0,005	0,092	0,084	483,7769	0,153	0,068586207
Rollers	2019	251	500	Rollers_2019_500	0,278634	0,234	2,10142	2,90839	0,005	0,111	0,102	489,9774	0,155	0,069482759
Rollers	2020	6	15	Rollers_2020_15	1,102095	0,926	4,72504	4,53426	0,005	0,329	0,303	525,8798	0,17	0,076206897
Rollers	2020	16	25	Rollers_2020_25	1,102095	0,926	4,72504	4,53426	0,005	0,329	0,303	525,8798	0,17	0,076206897
Rollers	2020	26	50	Rollers_2020_50	1,102095	0,926	4,72504	4,53426	0,005	0,329	0,303	525,8798	0,17	0,076206897
Rollers	2020	51	120	Rollers_2020_120	0,462004	0,388	3,53135	3,88153	0,005	0,247	0,228	473,8594	0,153	0,068586207
Rollers	2020	121	175	Rollers_2020_175	0,256128	0,215	2,93333	2,45176	0,005	0,113	0,104	471,9177	0,153	0,068586207
Rollers	2020	176	250	Rollers_2020_250	0,248138	0,209	1,25343	2,75095	0,005	0,089	0,082	473,3669	0,153	0,068586207
Rollers	2020	251	500	Rollers_2020_500	0,279691	0,235	2,11346	2,82823	0,005	0,109	0,101	479,3254	0,155	0,069482759

Rollers	2021	6	15	Rollers_2021_15	1,008559	0,847	4,59681	4,35097	0,005	0,294	0,27	525,7908	0,17	0,076206897
Rollers	2021	16	25	Rollers_2021_25	1,008559	0,847	4,59681	4,35097	0,005	0,294	0,27	525,7908	0,17	0,076206897
Rollers	2021	26	50	Rollers_2021_50	1,008559	0,847	4,59681	4,35097	0,005	0,294	0,27	525,7908	0,17	0,076206897
Rollers	2021	51	120	Rollers_2021_120	0,42061	0,353	3,50719	3,5889	0,005	0,219	0,202	473,9012	0,153	0,068586207
Rollers	2021	121	175	Rollers_2021_175	0,229571	0,193	2,9256	2,11691	0,005	0,097	0,09	471,9799	0,153	0,068586207
Rollers	2021	176	250	Rollers_2021_250	0,23384	0,196	1,22849	2,49332	0,005	0,081	0,075	473,4704	0,153	0,068586207
Rollers	2021	251	500	Rollers_2021_500	0,26246	0,221	1,94995	2,58936	0,005	0,1	0,092	479,3294	0,155	0,069482759
Rollers	2022	6	15	Rollers_2022_15	0,878567	0,738	4,40241	4,12773	0,005	0,25	0,23	525,691	0,17	0,076206897
Rollers	2022	16	25	Rollers_2022_25	0,878567	0,738	4,40241	4,12773	0,005	0,25	0,23	525,691	0,17	0,076206897
Rollers	2022	26	50	Rollers_2022_50	0,878567	0,738	4,40241	4,12773	0,005	0,25	0,23	525,691	0,17	0,076206897
Rollers	2022	51	120	Rollers_2022_120	0,369089	0,31	3,46973	3,21896	0,005	0,186	0,171	473,9291	0,153	0,068586207
Rollers	2022	121	175	Rollers_2022_175	0,195547	0,164	2,91331	1,71408	0,005	0,079	0,072	471,9475	0,153	0,068586207
Rollers	2022	176	250	Rollers_2022_250	0,221959	0,187	1,22821	2,2116	0,005	0,077	0,071	473,5135	0,153	0,068586207
Rollers	2022	251	500	Rollers_2022_500	0,259221	0,218	1,95495	2,46341	0,005	0,097	0,089	478,9817	0,155	0,069482759
Rollers	2023	6	15	Rollers_2023_15	0,786211	0,661	4,25236	3,9211	0,005	0,212	0,195	525,8616	0,17	0,076206897
Rollers	2023	16	25	Rollers_2023_25	0,786211	0,661	4,25236	3,9211	0,005	0,212	0,195	525,8616	0,17	0,076206897
Rollers	2023	26	50	Rollers_2023_50	0,786211	0,661	4,25236	3,9211	0,005	0,212	0,195	525,8616	0,17	0,076206897
Rollers	2023	51	120	Rollers_2023_120	0,341189	0,287	3,45461	3,00302	0,005	0,165	0,152	473,9363	0,153	0,068586207
Rollers	2023	121	175	Rollers_2023_175	0,1784	0,15	2,90949	1,4833	0,005	0,068	0,062	471,9351	0,153	0,068586207
Rollers	2023	176	250	Rollers_2023_250	0,223864	0,188	1,23448	2,17272	0,005	0,076	0,07	473,5164	0,153	0,068586207
Rollers	2023	251	500	Rollers_2023_500	0,25159	0,211	1,95626	2,29003	0,005	0,093	0,085	478,3028	0,155	0,069482759
Rollers	2024	6	15	Rollers_2024_15	0,738433	0,62	4,20667	3,82449	0,005	0,192	0,177	525,9565	0,17	0,076206897
Rollers	2024	16	25	Rollers_2024_25	0,738433	0,62	4,20667	3,82449	0,005	0,192	0,177	525,9565	0,17	0,076206897
Rollers	2024	26	50	Rollers_2024_50	0,738433	0,62	4,20667	3,82449	0,005	0,192	0,177	525,9565	0,17	0,076206897
Rollers	2024	51	120	Rollers_2024_120	0,323417	0,272	3,45055	2,843	0,005	0,15	0,138	474,0072	0,153	0,068586207
Rollers	2024	121	175	Rollers_2024_175	0,168235	0,141	2,91426	1,32428	0,005	0,061	0,056	472,012	0,153	0,068586207
Rollers	2024	176	250	Rollers_2024_250	0,213553	0,179	1,21417	1,97675	0,005	0,07	0,064	473,512	0,153	0,068586207
Rollers	2024	251	500	Rollers_2024_500	0,24978	0,21	1,96121	2,21612	0,005	0,09	0,083	477,9001	0,155	0,069482759
Rollers	2025	6	15	Rollers_2025_15	0,677074	0,569	4,12543	3,68893	0,005	0,167	0,154	526,1406	0,17	0,076206897
Rollers	2025	16	25	Rollers_2025_25	0,677074	0,569	4,12543	3,68893	0,005	0,167	0,154	526,1406	0,17	0,076206897
Rollers	2025	26	50	Rollers_2025_50	0,677074	0,569	4,12543	3,68893	0,005	0,167	0,154	526,1406	0,17	0,076206897
Rollers	2025	51	120	Rollers_2025_120	0,303987	0,255	3,44432	2,69137	0,005	0,135	0,125	473,851	0,153	0,068586207
Rollers	2025	121	175	Rollers_2025_175	0,150791	0,127	2,90859	1,10088	0,005	0,049	0,045	471,9696	0,153	0,068586207
Rollers	2025	176	250	Rollers_2025_250	0,205768	0,173	1,21477	1,78252	0,005	0,066	0,06	473,6813	0,153	0,068586207
Rollers	2025	251	500	Rollers_2025_500	0,251787	0,212	1,96754	2,19998	0,005	0,09	0,083	477,5732	0,154	0,069034483
Rollers	2030	6	15	Rollers_2030_15	1,543	0,661	3,469	4,142	0,008	0,161	0,161	568,299	0,059	0,026448276
Rollers	2030	16	25	Rollers_2030_25	3,377	0,685	2,339	4,332	0,007	0,161	0,161	568,299	0,061	0,027344828
Rollers	2030	26	50	Rollers_2030_50	5,638	0,587	4,784	3,48	0,007	0,073	0,073	568,299	0,053	0,023758621
Rollers	2030	51	120	Rollers_2030_120	6,528	0,299	3,639	1,95	0,006	0,066	0,066	568,299	0,027	0,012103448
Rollers	2030	121	175	Rollers_2030_175	8,923	0,223	3,203	0,907	0,006	0,042	0,042	568,299	0,02	0,008965517
Rollers	2030	176	250	Rollers_2030_250	11,047	0,195	1,099	0,745	0,006	0,024	0,024	568,299	0,017	0,00762069
Rollers	2030	251	500	Rollers_2030_500	15,637	0,193	1,056	0,697	0,005	0,023	0,023	568,299	0,017	0,00762069
Rollers	2035	6	15	Rollers_2035_15	1,543	0,661	3,469	4,142	0,008	0,161	0,161	568,299	0,059	0,026448276
Rollers	2035	16	25	Rollers_2035_25	3,377	0,685	2,34	4,332	0,007	0,161	0,161	568,3	0,061	0,027344828
Rollers	2035	26	50	Rollers_2035_50	4,867	0,507	4,711	3,28	0,007	0,038	0,038	568,299	0,045	0,020172414
Rollers	2035	51	120	Rollers_2035_120	5,632	0,258	3,629	1,65	0,006	0,035	0,035	568,299	0,023	0,010310345
Rollers	2035	121	175	Rollers_2035_175	7,351	0,184	3,204	0,523	0,006	0,023	0,023	568,299	0,016	0,007172414
Rollers	2035	176	250	Rollers_2035_250	9,79	0,173	1,091	0,465	0,006	0,016	0,016	568,299	0,015	0,006724138
Rollers	2035	251	500	Rollers_2035_500	13,949	0,172	1,048	0,442	0,005	0,016	0,016	568,3	0,015	0,006724138
Rollers	2040	6	15	Rollers_2040_15	1,543	0,661	3,469	4,142	0,008	0,161	0,161	568,299	0,059	0,026448276
Rollers	2040	16	25	Rollers_2040_25	3,377	0,685	2,339	4,332	0,007	0,161	0,161	568,299	0,061	0,027344828
Rollers	2040	26	50	Rollers_2040_50	4,508	0,469	4,682	3,207	0,007	0,024	0,024	568,299	0,042	0,018827586
Rollers	2040	51	120	Rollers_2040_120	5,228	0,24	3,625	1,525	0,006	0,021	0,021	568,299	0,021	0,009413793
Rollers	2040	121	175	Rollers_2040_175	6,731	0,168	3,205	0,373	0,006	0,015	0,015	568,299	0,015	0,006724138
Rollers	2040	176	250	Rollers_2040_250	9,355	0,165	1,092	0,348	0,006	0,012	0,012	568,299	0,014	0,006275862
Rollers	2040	251	500	Rollers_2040_500	13,378	0,165	1,048	0,341	0,005	0,012	0,012	568,299	0,014	0,006275862
Rough Terrain Forklifts	1990	26	50	Rough Terrain Forklifts_1990_50	13,299	5,191	10,416	8,098	0,871	1,348	1,348	568,299	0,468	0,209793103
Rough Terrain Forklifts	1990	51	120	Rough Terrain Forklifts_1990_120	11,91	2,52	6,008	15,753	0,791	1,432	1,432	568,299	0,227	0,101758621
Rough Terrain Forklifts	1990	121	175	Rough Terrain Forklifts_1990_175	19,775	2,092	5,422	15,888	0,758	1,178	1,178	568,299	0,188	0,084275862
Rough Terrain Forklifts	1990	176	250	Rough Terrain Forklifts_1990_250	27,042	2,092	5,422	15,888	0,758	1,178	1,178	568,299	0,188	0,084275862
Rough Terrain Forklifts	1990	251	500	Rough Terrain Forklifts_1990_500	35,607	1,834	12,637	14,986	0,662	0,998	0,998	568,299	0,165	0,073965517
Rough Terrain Forklifts	2000	26	50	Rough Terrain Forklifts_2000_50	11,216	4,378	9,045	7,041	0,066	0,919	0,919	568,3	0,395	0,177068966
Rough Terrain Forklifts	2000	51	120	Rough Terrain Forklifts_2000_120	8,517	1,802	4,574	10,225	0,06	0,881	0,881	568,299	0,162	0,07262069
Rough Terrain Forklifts	2000	121	175	Rough Terrain Forklifts_2000_175	11,484	1,215	3,676	9,36	0,057	0,511	0,511	568,3	0,109	0,048862069
Rough Terrain Forklifts	2000	176	250	Rough Terrain Forklifts_2000_250	13,186	1,02	2,927	9,021	0,057	0,418	0,418	568,299	0,092	0,041241379
Rough Terrain Forklifts	2000	251	500	Rough Terrain Forklifts_2000_500	18,049	0,929	4,415	8,59	0,05	0,37	0,37	568,299	0,083	0,037206897
Rough Terrain Forklifts	2005	26	50	Rough Terrain Forklifts_2005_50	9,835	3,839	8,285	6,528	0,066	0,844	0,844	568,299	0,346	0,155103448
Rough Terrain Forklifts	2005	51	120	Rough Terrain Forklifts_2005_120	7,351	1,555	4,289	8,677	0,06	0,82	0,82	568,299	0,14	0,062758621
Rough Terrain Forklifts	2005	121	175	Rough Terrain Forklifts_2005_175	9,61	1,016	3,403	7,941	0,057	0,447	0,447	568,3	0,091	0,040793103
Rough Terrain Forklifts	2005	176	250	Rough Terrain Forklifts_2005_250	9,418	0,728	1,995	7,52	0,057	0,289	0,289	568,299	0,065	0,029137931
Rough Terrain Forklifts	2005	251	500	Rough Terrain Forklifts_2005_500	12,496	0,643	2,406	6,82	0,05	0,258	0,258	568,299	0,058	0,026
Rough Terrain Forklifts	2010	26	50	Rough Terrain Forklifts_2010_50	1,514602	1,273	4,9076	5,57504	0,005	0,495	0,455	583,8316	0,17	0,076206897
Rough Terrain Forklifts	2010	51	120	Rough Terrain Forklifts_2010_120	0,607871	0,511	3,47103	5,81073	0,005	0,386	0,355	525,5318	0,153	0,068586207

Rough Terrain Forklifts	2010	121	175	Rough Terrain Forklifts_2010_175	0,37661	0,316	2,9137	4,78775	0,005	0,212	0,195	524,1127	0,153	0,068586207
Rough Terrain Forklifts	2010	176	250	Rough Terrain Forklifts_2010_250	0,759196	0,638	2,86785	7,87723	0,005	0,351	0,323	527,6921	0,154	0,069034483
Rough Terrain Forklifts	2010	251	500	Rough Terrain Forklifts_2010_500	0,386691	0,325	1,82955	5,79984	0,005	0,168	0,155	518,8116	0,151	0,067689655
Rough Terrain Forklifts	2011	26	50	Rough Terrain Forklifts_2011_50	1,444446	1,214	4,83823	5,52279	0,005	0,48	0,442	582,3751	0,17	0,076206897
Rough Terrain Forklifts	2011	51	120	Rough Terrain Forklifts_2011_120	0,549079	0,461	3,4365	5,4371	0,005	0,352	0,324	524,0504	0,153	0,068586207
Rough Terrain Forklifts	2011	121	175	Rough Terrain Forklifts_2011_175	0,339518	0,285	2,87624	4,45534	0,005	0,193	0,177	522,735	0,153	0,068586207
Rough Terrain Forklifts	2011	176	250	Rough Terrain Forklifts_2011_250	0,686556	0,577	2,63351	7,1588	0,005	0,317	0,292	525,8441	0,153	0,068586207
Rough Terrain Forklifts	2011	251	500	Rough Terrain Forklifts_2011_500	0,390538	0,328	1,84589	5,81691	0,005	0,17	0,156	517,5182	0,151	0,067689655
Rough Terrain Forklifts	2012	26	50	Rough Terrain Forklifts_2012_50	1,441034	1,211	4,88018	5,49331	0,005	0,476	0,438	580,9231	0,17	0,076206897
Rough Terrain Forklifts	2012	51	120	Rough Terrain Forklifts_2012_120	0,530399	0,446	3,43501	5,29115	0,005	0,34	0,312	522,6299	0,153	0,068586207
Rough Terrain Forklifts	2012	121	175	Rough Terrain Forklifts_2012_175	0,336361	0,283	2,88643	4,38447	0,005	0,189	0,174	521,4414	0,153	0,068586207
Rough Terrain Forklifts	2012	176	250	Rough Terrain Forklifts_2012_250	0,693119	0,582	2,65596	7,11155	0,005	0,319	0,293	524,4406	0,153	0,068586207
Rough Terrain Forklifts	2012	251	500	Rough Terrain Forklifts_2012_500	0,394706	0,332	1,86253	5,83389	0,005	0,171	0,157	516,2249	0,151	0,067689655
Rough Terrain Forklifts	2013	26	50	Rough Terrain Forklifts_2013_50	1,427232	1,199	4,88715	5,34043	0,005	0,454	0,417	578,2559	0,17	0,076206897
Rough Terrain Forklifts	2013	51	120	Rough Terrain Forklifts_2013_120	0,469882	0,395	3,39906	4,92337	0,005	0,299	0,275	519,906	0,153	0,068586207
Rough Terrain Forklifts	2013	121	175	Rough Terrain Forklifts_2013_175	0,283862	0,239	2,86094	3,90677	0,005	0,153	0,141	518,7027	0,153	0,068586207
Rough Terrain Forklifts	2013	176	250	Rough Terrain Forklifts_2013_250	0,418518	0,352	1,88921	4,79966	0,005	0,184	0,169	521,6392	0,153	0,068586207
Rough Terrain Forklifts	2013	251	500	Rough Terrain Forklifts_2013_500	0,334838	0,281	1,86541	4,62017	0,005	0,141	0,129	514,2815	0,151	0,067689655
Rough Terrain Forklifts	2014	26	50	Rough Terrain Forklifts_2014_50	1,40671	1,182	4,88713	5,22634	0,005	0,436	0,401	575,3526	0,17	0,076206897
Rough Terrain Forklifts	2014	51	120	Rough Terrain Forklifts_2014_120	0,417386	0,351	3,36705	4,46728	0,005	0,261	0,24	517,2602	0,153	0,068586207
Rough Terrain Forklifts	2014	121	175	Rough Terrain Forklifts_2014_175	0,263476	0,221	2,85182	3,59442	0,005	0,139	0,128	516,0907	0,153	0,068586207
Rough Terrain Forklifts	2014	176	250	Rough Terrain Forklifts_2014_250	0,221616	0,186	1,21218	2,98369	0,005	0,087	0,08	517,7663	0,153	0,068586207
Rough Terrain Forklifts	2014	251	500	Rough Terrain Forklifts_2014_500	0,202465	0,17	0,95399	3,49973	0,005	0,076	0,07	511,6567	0,151	0,067689655
Rough Terrain Forklifts	2015	26	50	Rough Terrain Forklifts_2015_50	1,414803	1,189	4,93325	5,18984	0,005	0,431	0,397	569,4875	0,17	0,076206897
Rough Terrain Forklifts	2015	51	120	Rough Terrain Forklifts_2015_120	0,401892	0,338	3,36619	4,28003	0,005	0,247	0,228	512,0859	0,153	0,068586207
Rough Terrain Forklifts	2015	121	175	Rough Terrain Forklifts_2015_175	0,25808	0,217	2,85917	3,42042	0,005	0,133	0,122	510,8541	0,153	0,068586207
Rough Terrain Forklifts	2015	176	250	Rough Terrain Forklifts_2015_250	0,166466	0,14	1,01164	2,4626	0,005	0,058	0,054	512,1638	0,153	0,068586207
Rough Terrain Forklifts	2015	251	500	Rough Terrain Forklifts_2015_500	0,207111	0,174	0,95822	3,52067	0,005	0,077	0,071	506,4349	0,151	0,067689655
Rough Terrain Forklifts	2016	26	50	Rough Terrain Forklifts_2016_50	1,378654	1,158	4,91773	5,09924	0,005	0,415	0,382	563,3598	0,17	0,076206897
Rough Terrain Forklifts	2016	51	120	Rough Terrain Forklifts_2016_120	0,358928	0,302	3,34169	3,84005	0,005	0,213	0,196	507,0659	0,153	0,068586207
Rough Terrain Forklifts	2016	121	175	Rough Terrain Forklifts_2016_175	0,248476	0,209	2,865	3,2087	0,005	0,124	0,114	505,596	0,153	0,068586207
Rough Terrain Forklifts	2016	176	250	Rough Terrain Forklifts_2016_250	0,171278	0,144	1,0177	2,46843	0,005	0,059	0,054	506,8956	0,153	0,068586207
Rough Terrain Forklifts	2016	251	500	Rough Terrain Forklifts_2016_500	0,211667	0,178	0,96236	3,54169	0,005	0,078	0,072	501,2134	0,151	0,067689655
Rough Terrain Forklifts	2017	26	50	Rough Terrain Forklifts_2017_50	1,318488	1,108	4,83344	4,90253	0,005	0,382	0,352	554,6234	0,17	0,076206897
Rough Terrain Forklifts	2017	51	120	Rough Terrain Forklifts_2017_120	0,322506	0,271	3,31778	3,41759	0,005	0,182	0,167	499,1682	0,153	0,068586207
Rough Terrain Forklifts	2017	121	175	Rough Terrain Forklifts_2017_175	0,231401	0,194	2,86636	2,90167	0,005	0,112	0,103	497,7766	0,153	0,068586207
Rough Terrain Forklifts	2017	176	250	Rough Terrain Forklifts_2017_250	0,175965	0,148	1,02362	2,47389	0,005	0,059	0,054	499,0007	0,153	0,068586207
Rough Terrain Forklifts	2017	251	500	Rough Terrain Forklifts_2017_500	0,216551	0,182	0,96636	3,56771	0,005	0,079	0,073	493,3362	0,151	0,067689655
Rough Terrain Forklifts	2018	26	50	Rough Terrain Forklifts_2018_50	1,273116	1,07	4,76839	4,73469	0,005	0,359	0,33	545,8693	0,17	0,076206897
Rough Terrain Forklifts	2018	51	120	Rough Terrain Forklifts_2018_120	0,264415	0,222	3,26976	2,84496	0,005	0,136	0,125	491,2107	0,153	0,068586207
Rough Terrain Forklifts	2018	121	175	Rough Terrain Forklifts_2018_175	0,194786	0,164	2,84245	2,34168	0,005	0,088	0,081	489,9869	0,153	0,068586207
Rough Terrain Forklifts	2018	176	250	Rough Terrain Forklifts_2018_250	0,181003	0,152	1,02948	2,48748	0,005	0,06	0,055	491,0997	0,153	0,068586207
Rough Terrain Forklifts	2018	251	500	Rough Terrain Forklifts_2018_500	0,172771	0,145	0,95802	2,70063	0,005	0,06	0,055	485,9543	0,151	0,067689655
Rough Terrain Forklifts	2019	26	50	Rough Terrain Forklifts_2019_50	1,200779	1,009	4,67405	4,55745	0,005	0,328	0,301	537,3287	0,17	0,076206897
Rough Terrain Forklifts	2019	51	120	Rough Terrain Forklifts_2019_120	0,240277	0,202	3,25848	2,6222	0,005	0,117	0,107	483,3105	0,153	0,068586207
Rough Terrain Forklifts	2019	121	175	Rough Terrain Forklifts_2019_175	0,177689	0,149	2,84092	2,05752	0,005	0,075	0,069	482,1188	0,153	0,068586207
Rough Terrain Forklifts	2019	176	250	Rough Terrain Forklifts_2019_250	0,130153	0,109	0,97423	1,63905	0,005	0,036	0,033	483,0882	0,153	0,068586207
Rough Terrain Forklifts	2019	251	500	Rough Terrain Forklifts_2019_500	0,138302	0,116	0,95034	1,96109	0,005	0,043	0,039	477,2539	0,151	0,067689655
Rough Terrain Forklifts	2020	26	50	Rough Terrain Forklifts_2020_50	1,188595	0,999	4,68594	4,4946	0,005	0,316	0,291	525,6222	0,17	0,076206897
Rough Terrain Forklifts	2020	51	120	Rough Terrain Forklifts_2020_120	0,225188	0,189	3,25575	2,45218	0,005	0,103	0,094	472,9842	0,153	0,068586207
Rough Terrain Forklifts	2020	121	175	Rough Terrain Forklifts_2020_175	0,170092	0,143	2,84466	1,86888	0,005	0,068	0,063	471,7152	0,153	0,068586207
Rough Terrain Forklifts	2020	176	250	Rough Terrain Forklifts_2020_250	0,132727	0,112	0,97848	1,60906	0,005	0,037	0,034	472,5671	0,153	0,068586207
Rough Terrain Forklifts	2020	251	500	Rough Terrain Forklifts_2020_500	0,105484	0,089	0,94184	1,30199	0,005	0,028	0,026	465,7709	0,151	0,067689655
Rough Terrain Forklifts	2021	26	50	Rough Terrain Forklifts_2021_50	1,152538	0,968	4,65658	4,41145	0,005	0,304	0,279	525,3844	0,17	0,076206897
Rough Terrain Forklifts	2021	51	120	Rough Terrain Forklifts_2021_120	0,207836	0,175	3,25191	2,28534	0,005	0,089	0,081	473,11	0,153	0,068586207
Rough Terrain Forklifts	2021	121	175	Rough Terrain Forklifts_2021_175	0,154972	0,13	2,8447	1,61661	0,005	0,06	0,055	471,7575	0,153	0,068586207
Rough Terrain Forklifts	2021	176	250	Rough Terrain Forklifts_2021_250	0,136824	0,115	0,98379	1,61186	0,005	0,037	0,034	472,5469	0,153	0,068586207
Rough Terrain Forklifts	2021	251	500	Rough Terrain Forklifts_2021_500	0,109168	0,092	0,94604	1,30199	0,005	0,028	0,026	465,7442	0,151	0,067689655
Rough Terrain Forklifts	2022	26	50	Rough Terrain Forklifts_2022_50	0,93878	0,789	4,3038	4,04131	0,005	0,238	0,219	525,0151	0,17	0,076206897
Rough Terrain Forklifts	2022	51	120	Rough Terrain Forklifts_2022_120	0,18871	0,159	3,24374	2,0983	0,005	0,073	0,067	473,089	0,153	0,068586207
Rough Terrain Forklifts	2022	121	175	Rough Terrain Forklifts_2022_175	0,142314	0,12	2,84439	1,40475	0,005	0,051	0,047	471,6773	0,153	0,068586207
Rough Terrain Forklifts	2022	176	250	Rough Terrain Forklifts_2022_250	0,140994	0,118	0,98924	1,61688	0,005	0,037	0,034	472,5408	0,153	0,068586207
Rough Terrain Forklifts	2022	251	500	Rough Terrain Forklifts_2022_500	0,081218	0,068	0,93709	0,55798	0,005	0,009	0,008	466,5598	0,151	0,067689655
Rough Terrain Forklifts	2023	26	50	Rough Terrain Forklifts_2023_50	0,82158	0,69	4,12519	3,85338	0,005	0,204	0,187	524,8024	0,17	0,076206897
Rough Terrain Forklifts	2023	51	120	Rough Terrain Forklifts_2023_120	0,178416	0,15	3,24217	1,9836	0,005	0,064	0,059	473,1584	0,153	0,068586207
Rough Terrain Forklifts	2023	121	175	Rough Terrain Forklifts_2023_175	0,132417	0,111	2,84289	1,21796	0,005	0,043	0,04	471,6217	0,153	0,068586207
Rough Terrain Forklifts	2023	176	250	Rough Terrain Forklifts_2023_250	0,137509	0,116	0,98987	1,47399	0,005	0,034	0,032	472,7784	0,153	0,068586207
Rough Terrain Forklifts	2023	251	500	Rough Terrain Forklifts_2023_500	0,082146	0,069	0,93788	0,55845	0,005	0,009	0,008	466,554	0,151	0,067689655
Rough Terrain Forklifts	2024	26	50	Rough Terrain Forklifts_2024_50	0,678189	0,57	3,91822	3,65343	0,005	0,166	0,152	524,9235	0,17	0,076206897
Rough Terrain Forklifts	2024	51	120	Rough Terrain Forklifts_2024_120	0,172725	0,145	3,24468	1,91392	0,005	0,058	0,054	473,0631	0,153	0,068586207
Rough Terrain Forklifts	2024	121	175	Rough Terrain Forklifts_2024_175	0,122467	0,103	2,83416	1,04413	0,005	0,039	0,035	471,5346	0,153	0,068586207
Rough Terrain Forklifts	2024	176	250	Rough Terrain Forklifts_2024_250	0,141528	0,119	0,99524	1,48012	0,005	0,035	0,032	472,8527	0,153	0,068586207
Rough Terrain Forklifts	2024	251	500	Rough Terrain Forklifts_2024_500	0,078846	0,066	0,93746	0,47582	0,005	0,009	0,008	466,5479	0,151	0,067689655

Rough Terrain Forklifts	2025	26	50	Rough Terrain Forklifts_2025_50	0,542352	0,456	3,74002	3,47668	0,005	0,128	0,118	525,027	0,17	0,076206897
Rough Terrain Forklifts	2025	51	120	Rough Terrain Forklifts_2025_120	0,16354	0,137	3,23971	1,82053	0,005	0,051	0,047	473,0366	0,153	0,068586207
Rough Terrain Forklifts	2025	121	175	Rough Terrain Forklifts_2025_175	0,103861	0,087	2,82091	0,78628	0,005	0,03	0,028	471,4745	0,152	0,068137931
Rough Terrain Forklifts	2025	176	250	Rough Terrain Forklifts_2025_250	0,145736	0,122	1,00073	1,48888	0,005	0,035	0,033	472,9267	0,153	0,068586207
Rough Terrain Forklifts	2025	251	500	Rough Terrain Forklifts_2025_500	0,081817	0,069	0,94151	0,47663	0,005	0,009	0,008	466,5414	0,151	0,067689655
Rough Terrain Forklifts	2030	26	50	Rough Terrain Forklifts_2030_50	1,404	0,548	5,031	3,359	0,007	0,039	0,039	568,299	0,049	0,021965517
Rough Terrain Forklifts	2030	51	120	Rough Terrain Forklifts_2030_120	1,321	0,279	3,725	1,671	0,006	0,034	0,034	568,299	0,025	0,011206897
Rough Terrain Forklifts	2030	121	175	Rough Terrain Forklifts_2030_175	1,898	0,2	3,291	0,537	0,006	0,023	0,023	568,299	0,018	0,008068966
Rough Terrain Forklifts	2030	176	250	Rough Terrain Forklifts_2030_250	2,47	0,191	1,121	0,463	0,006	0,016	0,016	568,299	0,017	0,00762069
Rough Terrain Forklifts	2030	251	500	Rough Terrain Forklifts_2030_500	3,702	0,19	1,07	0,443	0,005	0,016	0,016	568,3	0,017	0,00762069
Rough Terrain Forklifts	2035	26	50	Rough Terrain Forklifts_2035_50	1,335	0,521	5,011	3,267	0,007	0,022	0,022	568,299	0,047	0,021068966
Rough Terrain Forklifts	2035	51	120	Rough Terrain Forklifts_2035_120	1,24	0,262	3,722	1,53	0,006	0,02	0,02	568,299	0,023	0,010310345
Rough Terrain Forklifts	2035	121	175	Rough Terrain Forklifts_2035_175	1,742	0,184	3,292	0,364	0,006	0,015	0,015	568,299	0,016	0,007172414
Rough Terrain Forklifts	2035	176	250	Rough Terrain Forklifts_2035_250	2,346	0,181	1,121	0,334	0,006	0,012	0,012	568,299	0,016	0,007172414
Rough Terrain Forklifts	2035	251	500	Rough Terrain Forklifts_2035_500	3,524	0,181	1,071	0,331	0,005	0,012	0,012	568,3	0,016	0,007172414
Rough Terrain Forklifts	2040	26	50	Rough Terrain Forklifts_2040_50	1,331	0,519	5,01	3,228	0,007	0,017	0,017	568,3	0,046	0,02062069
Rough Terrain Forklifts	2040	51	120	Rough Terrain Forklifts_2040_120	1,222	0,258	3,722	1,485	0,006	0,016	0,016	568,299	0,023	0,010310345
Rough Terrain Forklifts	2040	121	175	Rough Terrain Forklifts_2040_175	1,687	0,178	3,292	0,303	0,006	0,012	0,012	568,3	0,016	0,007172414
Rough Terrain Forklifts	2040	176	250	Rough Terrain Forklifts_2040_250	2,296	0,177	1,121	0,292	0,006	0,011	0,011	568,299	0,016	0,007172414
Rough Terrain Forklifts	2040	251	500	Rough Terrain Forklifts_2040_500	3,449	0,177	1,071	0,292	0,005	0,011	0,011	568,299	0,016	0,007172414
Rubber Tired Dozers	1990	121	175	Rubber Tired Dozers_1990_175	6,172	1,886	5,29	14,831	0,758	1,059	1,059	568,299	0,17	0,076206897
Rubber Tired Dozers	1990	176	250	Rubber Tired Dozers_1990_250	8,746	1,886	5,29	14,831	0,758	1,059	1,059	568,299	0,17	0,076206897
Rubber Tired Dozers	1990	251	500	Rubber Tired Dozers_1990_500	11,084	1,655	12,26	13,986	0,662	0,899	0,899	568,299	0,149	0,066793103
Rubber Tired Dozers	1990	501	750	Rubber Tired Dozers_1990_750	16,688	1,655	12,26	13,986	1,018	0,915	0,915	568,3	0,149	0,066793103
Rubber Tired Dozers	1990	751	1000	Rubber Tired Dozers_1990_1000	24,619	1,645	12,26	13,986	1,018	0,903	0,903	568,299	0,148	0,066344828
Rubber Tired Dozers	2000	121	175	Rubber Tired Dozers_2000_175	4,761	1,454	4,295	10,881	0,057	0,624	0,624	568,299	0,131	0,058724138
Rubber Tired Dozers	2000	176	250	Rubber Tired Dozers_2000_250	6,043	1,303	3,733	10,625	0,057	0,548	0,548	568,299	0,117	0,052448276
Rubber Tired Dozers	2000	251	500	Rubber Tired Dozers_2000_500	7,775	1,161	6,982	10,023	0,05	0,474	0,474	568,299	0,104	0,04662069
Rubber Tired Dozers	2000	501	750	Rubber Tired Dozers_2000_750	11,706	1,161	6,982	10,023	0,052	0,474	0,474	568,3	0,104	0,04662069
Rubber Tired Dozers	2000	751	1000	Rubber Tired Dozers_2000_1000	17,842	1,192	7,415	10,456	0,052	0,451	0,451	568,3	0,107	0,047965517
Rubber Tired Dozers	2005	121	175	Rubber Tired Dozers_2005_175	4,21	1,286	4,026	9,666	0,057	0,567	0,567	568,299	0,116	0,052
Rubber Tired Dozers	2005	176	250	Rubber Tired Dozers_2005_250	4,912	1,059	2,99	9,344	0,057	0,437	0,437	568,299	0,095	0,042586207
Rubber Tired Dozers	2005	251	500	Rubber Tired Dozers_2005_500	6,277	0,937	5,159	8,574	0,05	0,38	0,38	568,299	0,084	0,037655172
Rubber Tired Dozers	2005	501	750	Rubber Tired Dozers_2005_750	9,496	0,942	5,15	8,694	0,052	0,382	0,382	568,299	0,085	0,038103448
Rubber Tired Dozers	2005	751	1000	Rubber Tired Dozers_2005_1000	14,937	0,998	5,524	9,444	0,052	0,369	0,369	568,299	0,09	0,040344828
Rubber Tired Dozers	2010	121	175	Rubber Tired Dozers_2010_175	1,12265	0,943	4,17063	9,78349	0,005	0,555	0,511	526,3128	0,153	0,068586207
Rubber Tired Dozers	2010	176	250	Rubber Tired Dozers_2010_250	0,840919	0,707	2,68761	8,22344	0,005	0,394	0,362	527,9126	0,154	0,069034483
Rubber Tired Dozers	2010	251	500	Rubber Tired Dozers_2010_500	0,88356	0,742	6,7191	8,70703	0,005	0,406	0,374	533,1476	0,155	0,069482759
Rubber Tired Dozers	2010	501	750	Rubber Tired Dozers_2010_750	0,619996	0,521	3,1214	7,42352	0,005	0,269	0,248	525,7054	0,153	0,068586207
Rubber Tired Dozers	2010	751	1000	Rubber Tired Dozers_2010_1000	12,178	0,814	4,027	8,149	0,005	0,29	0,29	568,299	0,073	0,032724138
Rubber Tired Dozers	2011	121	175	Rubber Tired Dozers_2011_175	1,128595	0,948	4,18594	9,7992	0,005	0,557	0,513	524,9639	0,153	0,068586207
Rubber Tired Dozers	2011	176	250	Rubber Tired Dozers_2011_250	0,852039	0,716	2,69892	8,24976	0,005	0,396	0,364	526,5967	0,154	0,069034483
Rubber Tired Dozers	2011	251	500	Rubber Tired Dozers_2011_500	0,878525	0,738	6,65601	8,60406	0,005	0,402	0,37	532,0871	0,155	0,069482759
Rubber Tired Dozers	2011	501	750	Rubber Tired Dozers_2011_750	0,62921	0,529	3,13084	7,4622	0,005	0,272	0,25	524,3841	0,153	0,068586207
Rubber Tired Dozers	2011	751	1000	Rubber Tired Dozers_2011_1000	11,693	0,781	3,772	7,805	0,005	0,276	0,276	568,299	0,07	0,03137931
Rubber Tired Dozers	2012	121	175	Rubber Tired Dozers_2012_175	1,133798	0,953	4,1998	9,81194	0,005	0,559	0,515	523,6318	0,153	0,068586207
Rubber Tired Dozers	2012	176	250	Rubber Tired Dozers_2012_250	0,862577	0,725	2,70943	8,27234	0,005	0,398	0,366	525,281	0,154	0,069034483
Rubber Tired Dozers	2012	251	500	Rubber Tired Dozers_2012_500	0,883165	0,742	6,62489	8,58436	0,005	0,401	0,369	530,6589	0,155	0,069482759
Rubber Tired Dozers	2012	501	750	Rubber Tired Dozers_2012_750	0,635938	0,534	3,13648	7,48052	0,005	0,274	0,252	523,0626	0,153	0,068586207
Rubber Tired Dozers	2012	751	1000	Rubber Tired Dozers_2012_1000	11,228	0,75	3,531	7,474	0,005	0,262	0,262	568,299	0,067	0,030034483
Rubber Tired Dozers	2013	121	175	Rubber Tired Dozers_2013_175	1,138698	0,957	4,21297	9,82334	0,005	0,561	0,516	520,9836	0,153	0,068586207
Rubber Tired Dozers	2013	176	250	Rubber Tired Dozers_2013_250	0,859983	0,723	2,71092	8,10695	0,005	0,395	0,363	522,6456	0,154	0,069034483
Rubber Tired Dozers	2013	251	500	Rubber Tired Dozers_2013_500	0,864011	0,726	6,42295	8,33658	0,005	0,39	0,359	527,9093	0,155	0,069482759
Rubber Tired Dozers	2013	501	750	Rubber Tired Dozers_2013_750	0,641687	0,539	3,14069	7,49129	0,005	0,275	0,253	520,4266	0,153	0,068586207
Rubber Tired Dozers	2013	751	1000	Rubber Tired Dozers_2013_1000	10,78	0,72	3,306	7,155	0,005	0,249	0,249	568,299	0,065	0,029137931
Rubber Tired Dozers	2014	121	175	Rubber Tired Dozers_2014_175	1,143391	0,961	4,22564	9,83401	0,005	0,563	0,518	518,335	0,153	0,068586207
Rubber Tired Dozers	2014	176	250	Rubber Tired Dozers_2014_250	0,858402	0,721	2,71199	7,97218	0,005	0,392	0,361	520,0105	0,154	0,069034483
Rubber Tired Dozers	2014	251	500	Rubber Tired Dozers_2014_500	0,841688	0,707	6,16471	8,05819	0,005	0,376	0,346	524,6758	0,155	0,069482759
Rubber Tired Dozers	2014	501	750	Rubber Tired Dozers_2014_750	0,610646	0,513	2,75605	7,14705	0,005	0,258	0,237	517,7903	0,153	0,068586207
Rubber Tired Dozers	2014	751	1000	Rubber Tired Dozers_2014_1000	10,347	0,691	3,096	6,849	0,005	0,236	0,236	568,3	0,062	0,027793103
Rubber Tired Dozers	2015	121	175	Rubber Tired Dozers_2015_175	1,147937	0,965	4,23794	9,84425	0,005	0,564	0,519	513,0549	0,153	0,068586207
Rubber Tired Dozers	2015	176	250	Rubber Tired Dozers_2015_250	0,866859	0,728	2,7204	7,9837	0,005	0,394	0,362	514,7359	0,154	0,069034483
Rubber Tired Dozers	2015	251	500	Rubber Tired Dozers_2015_500	0,842228	0,708	6,10151	7,99736	0,005	0,373	0,343	519,1472	0,155	0,069482759
Rubber Tired Dozers	2015	501	750	Rubber Tired Dozers_2015_750	0,616719	0,518	2,76062	7,15777	0,005	0,259	0,238	512,5253	0,153	0,068586207
Rubber Tired Dozers	2015	751	1000	Rubber Tired Dozers_2015_1000	9,895	0,661	2,901	6,556	0,005	0,222	0,222	568,299	0,059	0,026448276
Rubber Tired Dozers	2016	121	175	Rubber Tired Dozers_2016_175	1,152013	0,968	4,24901	9,85328	0,005	0,566	0,52	507,7744	0,153	0,068586207
Rubber Tired Dozers	2016	176	250	Rubber Tired Dozers_2016_250	0,875531	0,736	2,72943	7,99508	0,005	0,395	0,364	509,4615	0,154	0,069034483
Rubber Tired Dozers	2016	251	500	Rubber Tired Dozers_2016_500	0,819146	0,688	5,82829	7,71034	0,005	0,359	0,33	513,3109	0,155	0,069482759
Rubber Tired Dozers	2016	501	750	Rubber Tired Dozers_2016_750	0,622662	0,523	2,7651	7,16821	0,005	0,26	0,239	507,2601	0,153	0,068586207
Rubber Tired Dozers	2016	751	1000	Rubber Tired Dozers_2016_1000	9,45	0,631	2,723	6,277	0,005	0,208	0,208	568,3	0,057	0,025551724
Rubber Tired Dozers	2017	121	175	Rubber Tired Dozers_2017_175	1,074198	0,903	4,14895	9,12915	0,005	0,525	0,483	499,4096	0,153	0,068586207
Rubber Tired Dozers	2017	176	250	Rubber Tired Dozers_2017_250	0,840865	0,707	2,65514	7,67081	0,005	0,375	0,345	501,5475	0,154	0,069034483
Rubber Tired Dozers	2017	251	500	Rubber Tired Dozers_2017_500	0,787455	0,662	5,52569	7,33345	0,005	0,341	0,313	505,8493	0,155	0,069482759

Rubber Tired Dozers	2017	501	750	Rubber Tired Dozers_2017_750	0,625767	0,526	2,76746	7,17226	0,005	0,26	0,239	499,3665	0,153	0,068586207
Rubber Tired Dozers	2017	751	1000	Rubber Tired Dozers_2017_1000	9,018	0,602	2,56	6,013	0,005	0,195	0,195	568,299	0,054	0,024206897
Rubber Tired Dozers	2018	121	175	Rubber Tired Dozers_2018_175	0,954751	0,802	3,98965	8,02079	0,005	0,46	0,424	491,4921	0,153	0,068586207
Rubber Tired Dozers	2018	176	250	Rubber Tired Dozers_2018_250	0,796398	0,669	2,51156	7,20787	0,005	0,35	0,322	493,6337	0,154	0,069034483
Rubber Tired Dozers	2018	251	500	Rubber Tired Dozers_2018_500	0,71175	0,598	4,98205	6,50184	0,005	0,3	0,276	498,1862	0,155	0,069482759
Rubber Tired Dozers	2018	501	750	Rubber Tired Dozers_2018_750	0,602699	0,506	2,75902	6,72652	0,005	0,248	0,228	491,4726	0,153	0,068586207
Rubber Tired Dozers	2018	751	1000	Rubber Tired Dozers_2018_1000	8,6	0,574	2,413	5,764	0,005	0,183	0,183	568,299	0,051	0,022862069
Rubber Tired Dozers	2019	121	175	Rubber Tired Dozers_2019_175	0,90312	0,759	3,94854	7,52037	0,005	0,433	0,398	483,5585	0,153	0,068586207
Rubber Tired Dozers	2019	176	250	Rubber Tired Dozers_2019_250	0,774882	0,651	2,45855	6,92923	0,005	0,338	0,311	485,172	0,154	0,069034483
Rubber Tired Dozers	2019	251	500	Rubber Tired Dozers_2019_500	0,680848	0,572	4,74309	6,14335	0,005	0,283	0,26	490,383	0,155	0,069482759
Rubber Tired Dozers	2019	501	750	Rubber Tired Dozers_2019_750	0,541107	0,455	2,59814	6,12249	0,005	0,218	0,201	483,5786	0,153	0,068586207
Rubber Tired Dozers	2019	751	1000	Rubber Tired Dozers_2019_1000	8,196	0,547	2,281	5,528	0,005	0,171	0,171	568,299	0,049	0,021965517
Rubber Tired Dozers	2020	121	175	Rubber Tired Dozers_2020_175	0,864425	0,726	3,89288	7,18525	0,005	0,411	0,378	473,0116	0,153	0,068586207
Rubber Tired Dozers	2020	176	250	Rubber Tired Dozers_2020_250	0,737248	0,619	2,37104	6,50332	0,005	0,318	0,293	474,7928	0,154	0,069034483
Rubber Tired Dozers	2020	251	500	Rubber Tired Dozers_2020_500	0,636621	0,535	4,41134	5,64089	0,005	0,259	0,238	479,7569	0,155	0,069482759
Rubber Tired Dozers	2020	501	750	Rubber Tired Dozers_2020_750	0,543245	0,456	2,60108	6,12255	0,005	0,218	0,201	473,0562	0,153	0,068586207
Rubber Tired Dozers	2020	751	1000	Rubber Tired Dozers_2020_1000	7,811	0,522	2,164	5,306	0,005	0,16	0,16	568,299	0,047	0,021068966
Rubber Tired Dozers	2021	121	175	Rubber Tired Dozers_2021_175	0,822557	0,691	3,84814	6,79037	0,005	0,386	0,355	472,9751	0,153	0,068586207
Rubber Tired Dozers	2021	176	250	Rubber Tired Dozers_2021_250	0,714624	0,6	2,31719	6,29617	0,005	0,306	0,281	474,7984	0,154	0,069034483
Rubber Tired Dozers	2021	251	500	Rubber Tired Dozers_2021_500	0,585817	0,492	4,04107	5,081	0,005	0,232	0,214	478,9868	0,155	0,069482759
Rubber Tired Dozers	2021	501	750	Rubber Tired Dozers_2021_750	0,545338	0,458	2,60396	6,12254	0,005	0,218	0,201	473,0459	0,153	0,068586207
Rubber Tired Dozers	2021	751	1000	Rubber Tired Dozers_2021_1000	7,448	0,497	2,057	5,095	0,005	0,15	0,15	568,299	0,044	0,019724138
Rubber Tired Dozers	2022	121	175	Rubber Tired Dozers_2022_175	0,714312	0,6	3,75194	5,80781	0,005	0,326	0,3	473,9122	0,153	0,068586207
Rubber Tired Dozers	2022	176	250	Rubber Tired Dozers_2022_250	0,571708	0,48	2,05563	5,04648	0,005	0,24	0,22	474,6166	0,154	0,069034483
Rubber Tired Dozers	2022	251	500	Rubber Tired Dozers_2022_500	0,565033	0,475	3,89489	4,80775	0,005	0,22	0,202	479,3107	0,155	0,069482759
Rubber Tired Dozers	2022	501	750	Rubber Tired Dozers_2022_750	0,547387	0,46	2,60677	6,12245	0,005	0,218	0,201	473,035	0,153	0,068586207
Rubber Tired Dozers	2022	751	1000	Rubber Tired Dozers_2022_1000	7,106	0,475	1,961	4,896	0,005	0,14	0,14	568,299	0,042	0,018827586
Rubber Tired Dozers	2023	121	175	Rubber Tired Dozers_2023_175	0,700073	0,588	3,7664	5,65638	0,005	0,316	0,291	473,9009	0,153	0,068586207
Rubber Tired Dozers	2023	176	250	Rubber Tired Dozers_2023_250	0,467601	0,393	1,78266	4,09011	0,005	0,184	0,169	474,5967	0,153	0,068586207
Rubber Tired Dozers	2023	251	500	Rubber Tired Dozers_2023_500	0,531484	0,447	3,68617	4,40835	0,005	0,202	0,185	479,4678	0,155	0,069482759
Rubber Tired Dozers	2023	501	750	Rubber Tired Dozers_2023_750	0,502999	0,423	2,59131	5,33389	0,005	0,196	0,18	473,0234	0,153	0,068586207
Rubber Tired Dozers	2023	751	1000	Rubber Tired Dozers_2023_1000	6,786	0,453	1,874	4,709	0,005	0,131	0,131	568,299	0,04	0,017931034
Rubber Tired Dozers	2024	121	175	Rubber Tired Dozers_2024_175	0,633623	0,532	3,69636	5,0144	0,005	0,279	0,257	473,5147	0,153	0,068586207
Rubber Tired Dozers	2024	176	250	Rubber Tired Dozers_2024_250	0,474702	0,399	1,79685	4,0904	0,005	0,184	0,17	474,5854	0,153	0,068586207
Rubber Tired Dozers	2024	251	500	Rubber Tired Dozers_2024_500	0,495724	0,417	3,45746	4,03046	0,005	0,182	0,168	479,3938	0,155	0,069482759
Rubber Tired Dozers	2024	501	750	Rubber Tired Dozers_2024_750	0,506146	0,425	2,59604	5,33372	0,005	0,196	0,18	473,0111	0,153	0,068586207
Rubber Tired Dozers	2024	751	1000	Rubber Tired Dozers_2024_1000	6,485	0,433	1,796	4,532	0,005	0,123	0,123	568,299	0,039	0,017482759
Rubber Tired Dozers	2025	121	175	Rubber Tired Dozers_2025_175	0,548636	0,461	3,61238	4,22886	0,005	0,23	0,212	474,1029	0,153	0,068586207
Rubber Tired Dozers	2025	176	250	Rubber Tired Dozers_2025_250	0,442605	0,372	1,72032	3,80547	0,005	0,167	0,153	474,5734	0,153	0,068586207
Rubber Tired Dozers	2025	251	500	Rubber Tired Dozers_2025_500	0,436562	0,367	2,95895	3,36957	0,005	0,151	0,139	479,0915	0,155	0,069482759
Rubber Tired Dozers	2025	501	750	Rubber Tired Dozers_2025_750	0,509225	0,428	2,60066	5,33346	0,005	0,196	0,18	472,9981	0,153	0,068586207
Rubber Tired Dozers	2025	751	1000	Rubber Tired Dozers_2025_1000	6,203	0,414	1,725	4,365	0,005	0,115	0,115	568,299	0,037	0,016586207
Rubber Tired Dozers	2030	121	175	Rubber Tired Dozers_2030_175	1,303	0,398	3,496	2,034	0,006	0,111	0,111	568,299	0,035	0,015689655
Rubber Tired Dozers	2030	176	250	Rubber Tired Dozers_2030_250	1,556	0,335	1,322	1,828	0,006	0,069	0,069	568,299	0,03	0,013448276
Rubber Tired Dozers	2030	251	500	Rubber Tired Dozers_2030_500	2,16	0,322	1,401	1,658	0,005	0,064	0,064	568,299	0,029	0,013
Rubber Tired Dozers	2030	501	750	Rubber Tired Dozers_2030_750	3,261	0,323	1,401	1,694	0,005	0,064	0,064	568,299	0,029	0,013
Rubber Tired Dozers	2030	751	1000	Rubber Tired Dozers_2030_1000	5,063	0,338	1,465	3,676	0,005	0,082	0,082	568,299	0,03	0,013448276
Rubber Tired Dozers	2035	121	175	Rubber Tired Dozers_2035_175	1,054	0,322	3,481	1,345	0,006	0,071	0,071	568,299	0,029	0,013
Rubber Tired Dozers	2035	176	250	Rubber Tired Dozers_2035_250	1,326	0,286	1,262	1,203	0,006	0,046	0,046	568,299	0,025	0,011206897
Rubber Tired Dozers	2035	251	500	Rubber Tired Dozers_2035_500	1,868	0,279	1,279	1,107	0,005	0,043	0,043	568,3	0,025	0,011206897
Rubber Tired Dozers	2035	501	750	Rubber Tired Dozers_2035_750	2,816	0,279	1,279	1,126	0,005	0,043	0,043	568,299	0,025	0,011206897
Rubber Tired Dozers	2035	751	1000	Rubber Tired Dozers_2035_1000	4,306	0,287	1,312	3,204	0,005	0,06	0,06	568,299	0,025	0,011206897
Rubber Tired Dozers	2040	121	175	Rubber Tired Dozers_2040_175	0,9	0,275	3,47	0,903	0,006	0,045	0,045	568,299	0,024	0,010758621
Rubber Tired Dozers	2040	176	250	Rubber Tired Dozers_2040_250	1,176	0,253	1,225	0,81	0,006	0,031	0,031	568,299	0,022	0,009862069
Rubber Tired Dozers	2040	251	500	Rubber Tired Dozers_2040_500	1,672	0,249	1,198	0,758	0,005	0,029	0,029	568,299	0,022	0,009862069
Rubber Tired Dozers	2040	501	750	Rubber Tired Dozers_2040_750	2,519	0,25	1,198	0,767	0,005	0,029	0,029	568,3	0,022	0,009862069
Rubber Tired Dozers	2040	751	1000	Rubber Tired Dozers_2040_1000	3,814	0,254	1,218	2,91	0,005	0,045	0,045	568,3	0,023	0,010310345
Rubber Tired Loaders	1990	16	25	Rubber Tired Loaders_1990_25	5,92	2,213	4,999	6,919	0,855	0,741	0,741	568,299	0,199	0,089206897
Rubber Tired Loaders	1990	26	50	Rubber Tired Loaders_1990_50	23,869	4,848	9,805	7,964	0,871	1,279	1,279	568,299	0,437	0,195896552
Rubber Tired Loaders	1990	51	120	Rubber Tired Loaders_1990_120	22,055	2,368	5,728	14,978	0,791	1,345	1,345	568,299	0,213	0,095482759
Rubber Tired Loaders	1990	121	175	Rubber Tired Loaders_1990_175	30,1	1,791	5,094	14,294	0,758	0,995	0,995	568,299	0,161	0,072172414
Rubber Tired Loaders	1990	176	250	Rubber Tired Loaders_1990_250	42,179	1,791	5,094	14,294	0,758	0,995	0,995	568,3	0,161	0,072172414
Rubber Tired Loaders	1990	251	500	Rubber Tired Loaders_1990_500	59,295	1,583	11,282	13,545	0,662	0,851	0,851	568,3	0,142	0,063655172
Rubber Tired Loaders	1990	501	750	Rubber Tired Loaders_1990_750	121,471	1,583	11,282	13,545	1,018	0,867	0,867	568,299	0,142	0,063655172
Rubber Tired Loaders	1990	751	1000	Rubber Tired Loaders_1990_1000	147,851	1,575	11,282	13,545	1,018	0,858	0,858	568,299	0,142	0,063655172
Rubber Tired Loaders	2000	16	25	Rubber Tired Loaders_2000_25	5,105	1,908	4,438	6,326	0,065	0,555	0,555	568,299	0,172	0,077103448
Rubber Tired Loaders	2000	26	50	Rubber Tired Loaders_2000_50	21,853	4,439	9,15	7,065	0,066	0,928	0,928	568,299	0,4	0,179310345
Rubber Tired Loaders	2000	51	120	Rubber Tired Loaders_2000_120	17,155	1,842	4,652	10,433	0,06	0,896	0,896	568,299	0,166	0,074413793
Rubber Tired Loaders	2000	121	175	Rubber Tired Loaders_2000_175	20,951	1,246	3,765	9,552	0,057	0,526	0,526	568,299	0,112	0,050206897
Rubber Tired Loaders	2000	176	250	Rubber Tired Loaders_2000_250	24,776	1,052	3,019	9,216	0,057	0,433	0,433	568,299	0,094	0,042137931
Rubber Tired Loaders	2000	251	500	Rubber Tired Loaders_2000_500	35,779	0,955	4,797	8,766	0,05	0,381	0,381	568,299	0,086	0,038551724
Rubber Tired Loaders	2000	501	750	Rubber Tired Loaders_2000_750	73,296	0,955	4,797	8,766	0,052	0,381	0,381	568,299	0,086	0,038551724
Rubber Tired Loaders	2000	751	1000	Rubber Tired Loaders_2000_1000	95,549	1,018	5,369	9,342	0,052	0,372	0,372	568,299	0,091	0,040793103

Rubber Tired Loaders	2005	16	25	Rubber Tired Loaders_2005_25	2,273	0,849	2,519	5,321	0,065	0,333	0,333	568,299	0,076	0,034068966
Rubber Tired Loaders	2005	26	50	Rubber Tired Loaders_2005_50	19,43	3,947	8,471	6,59	0,066	0,86	0,86	568,299	0,356	0,159586207
Rubber Tired Loaders	2005	51	120	Rubber Tired Loaders_2005_120	14,973	1,608	4,379	8,954	0,06	0,841	0,841	568,3	0,145	0,065
Rubber Tired Loaders	2005	121	175	Rubber Tired Loaders_2005_175	17,677	1,052	3,496	8,183	0,057	0,464	0,464	568,299	0,094	0,042137931
Rubber Tired Loaders	2005	176	250	Rubber Tired Loaders_2005_250	18,23	0,774	2,143	7,781	0,057	0,31	0,31	568,3	0,069	0,030931034
Rubber Tired Loaders	2005	251	500	Rubber Tired Loaders_2005_500	25,602	0,683	2,836	7,066	0,05	0,275	0,275	568,3	0,061	0,027344828
Rubber Tired Loaders	2005	501	750	Rubber Tired Loaders_2005_750	53,332	0,695	2,831	7,236	0,052	0,278	0,278	568,299	0,062	0,027793103
Rubber Tired Loaders	2005	751	1000	Rubber Tired Loaders_2005_1000	74,257	0,791	3,279	8,232	0,052	0,275	0,275	568,299	0,071	0,031827586
Rubber Tired Loaders	2010	16	25	Rubber Tired Loaders_2010_25	2,807425	2,359	7,88269	6,29919	0,005	0,734	0,675	581,9969	0,169	0,075758621
Rubber Tired Loaders	2010	26	50	Rubber Tired Loaders_2010_50	2,807425	2,359	7,88269	6,29919	0,005	0,734	0,675	581,9969	0,169	0,075758621
Rubber Tired Loaders	2010	51	120	Rubber Tired Loaders_2010_120	1,132276	0,951	4,28386	7,85298	0,005	0,68	0,626	519,5038	0,151	0,067689655
Rubber Tired Loaders	2010	121	175	Rubber Tired Loaders_2010_175	0,772004	0,649	3,56499	7,01127	0,005	0,387	0,356	523,9006	0,152	0,068137931
Rubber Tired Loaders	2010	176	250	Rubber Tired Loaders_2010_250	0,475737	0,4	1,50852	5,94632	0,005	0,199	0,183	522,3501	0,152	0,068137931
Rubber Tired Loaders	2010	251	500	Rubber Tired Loaders_2010_500	0,495122	0,416	2,61599	5,66307	0,005	0,211	0,194	521,885	0,152	0,068137931
Rubber Tired Loaders	2010	501	750	Rubber Tired Loaders_2010_750	0,454547	0,382	2,10254	5,06362	0,005	0,197	0,181	507,2864	0,148	0,066344828
Rubber Tired Loaders	2010	751	1000	Rubber Tired Loaders_2010_1000	0,464861	0,391	1,45926	6,63966	0,005	0,187	0,172	523,2526	0,152	0,068137931
Rubber Tired Loaders	2011	16	25	Rubber Tired Loaders_2011_25	2,679774	2,252	7,77095	6,24779	0,005	0,711	0,654	581,4262	0,17	0,076206897
Rubber Tired Loaders	2011	26	50	Rubber Tired Loaders_2011_50	2,679774	2,252	7,77095	6,24779	0,005	0,711	0,654	581,4262	0,17	0,076206897
Rubber Tired Loaders	2011	51	120	Rubber Tired Loaders_2011_120	1,113092	0,935	4,28739	7,68957	0,005	0,671	0,618	517,9363	0,151	0,067689655
Rubber Tired Loaders	2011	121	175	Rubber Tired Loaders_2011_175	0,757164	0,636	3,57219	6,81375	0,005	0,378	0,348	522,5315	0,152	0,068137931
Rubber Tired Loaders	2011	176	250	Rubber Tired Loaders_2011_250	0,481296	0,404	1,50155	5,87694	0,005	0,197	0,181	520,9732	0,152	0,068137931
Rubber Tired Loaders	2011	251	500	Rubber Tired Loaders_2011_500	0,501144	0,421	2,56846	5,5868	0,005	0,209	0,192	520,154	0,152	0,068137931
Rubber Tired Loaders	2011	501	750	Rubber Tired Loaders_2011_750	0,472712	0,397	2,12943	5,09397	0,005	0,2	0,184	505,881	0,148	0,066344828
Rubber Tired Loaders	2011	751	1000	Rubber Tired Loaders_2011_1000	0,476526	0,4	1,47057	6,69396	0,005	0,191	0,176	521,9232	0,152	0,068137931
Rubber Tired Loaders	2012	16	25	Rubber Tired Loaders_2012_25	2,730745	2,295	7,96233	6,30427	0,005	0,724	0,666	579,9785	0,17	0,076206897
Rubber Tired Loaders	2012	26	50	Rubber Tired Loaders_2012_50	2,730745	2,295	7,96233	6,30427	0,005	0,724	0,666	579,9785	0,17	0,076206897
Rubber Tired Loaders	2012	51	120	Rubber Tired Loaders_2012_120	1,113822	0,936	4,31845	7,65616	0,005	0,671	0,617	516,6239	0,151	0,067689655
Rubber Tired Loaders	2012	121	175	Rubber Tired Loaders_2012_175	0,765409	0,643	3,60616	6,79567	0,005	0,38	0,349	521,0995	0,152	0,068137931
Rubber Tired Loaders	2012	176	250	Rubber Tired Loaders_2012_250	0,492248	0,414	1,51119	5,85805	0,005	0,198	0,182	519,646	0,152	0,068137931
Rubber Tired Loaders	2012	251	500	Rubber Tired Loaders_2012_500	0,515336	0,433	2,59983	5,58714	0,005	0,211	0,194	518,7236	0,152	0,068137931
Rubber Tired Loaders	2012	501	750	Rubber Tired Loaders_2012_750	0,485752	0,408	2,14848	5,07921	0,005	0,201	0,185	504,6824	0,148	0,066344828
Rubber Tired Loaders	2012	751	1000	Rubber Tired Loaders_2012_1000	0,48616	0,409	1,47877	6,73245	0,005	0,194	0,178	520,592	0,152	0,068137931
Rubber Tired Loaders	2013	16	25	Rubber Tired Loaders_2013_25	2,60616	2,19	7,83573	6,18494	0,005	0,695	0,64	577,0156	0,17	0,076206897
Rubber Tired Loaders	2013	26	50	Rubber Tired Loaders_2013_50	2,60616	2,19	7,83573	6,18494	0,005	0,695	0,64	577,0156	0,17	0,076206897
Rubber Tired Loaders	2013	51	120	Rubber Tired Loaders_2013_120	1,087575	0,914	4,31523	7,47698	0,005	0,654	0,602	513,9368	0,151	0,067689655
Rubber Tired Loaders	2013	121	175	Rubber Tired Loaders_2013_175	0,750707	0,631	3,60722	6,6063	0,005	0,369	0,339	518,3787	0,152	0,068137931
Rubber Tired Loaders	2013	176	250	Rubber Tired Loaders_2013_250	0,496511	0,417	1,5142	5,75293	0,005	0,196	0,181	516,9736	0,152	0,068137931
Rubber Tired Loaders	2013	251	500	Rubber Tired Loaders_2013_500	0,517428	0,435	2,55447	5,4738	0,005	0,208	0,191	515,9429	0,152	0,068137931
Rubber Tired Loaders	2013	501	750	Rubber Tired Loaders_2013_750	0,49047	0,412	2,0823	4,99146	0,005	0,199	0,183	502,8589	0,148	0,066344828
Rubber Tired Loaders	2013	751	1000	Rubber Tired Loaders_2013_1000	0,484243	0,407	1,45163	6,66719	0,005	0,193	0,178	517,9506	0,152	0,068137931
Rubber Tired Loaders	2014	16	25	Rubber Tired Loaders_2014_25	2,51646	2,115	7,7699	6,10324	0,005	0,676	0,622	573,5218	0,169	0,075758621
Rubber Tired Loaders	2014	26	50	Rubber Tired Loaders_2014_50	2,51646	2,115	7,7699	6,10324	0,005	0,676	0,622	573,5218	0,169	0,075758621
Rubber Tired Loaders	2014	51	120	Rubber Tired Loaders_2014_120	1,032758	0,868	4,26762	7,12932	0,005	0,619	0,569	510,0099	0,151	0,067689655
Rubber Tired Loaders	2014	121	175	Rubber Tired Loaders_2014_175	0,720145	0,605	3,58536	6,27196	0,005	0,35	0,322	515,7685	0,152	0,068137931
Rubber Tired Loaders	2014	176	250	Rubber Tired Loaders_2014_250	0,483874	0,407	1,48551	5,49539	0,005	0,187	0,172	514,2167	0,152	0,068137931
Rubber Tired Loaders	2014	251	500	Rubber Tired Loaders_2014_500	0,501158	0,421	2,40656	5,19438	0,005	0,196	0,18	512,5095	0,151	0,067689655
Rubber Tired Loaders	2014	501	750	Rubber Tired Loaders_2014_750	0,483251	0,406	1,94616	4,81047	0,005	0,19	0,175	499,6952	0,148	0,066344828
Rubber Tired Loaders	2014	751	1000	Rubber Tired Loaders_2014_1000	0,492279	0,414	1,45724	6,69249	0,005	0,195	0,179	515,307	0,152	0,068137931
Rubber Tired Loaders	2015	16	25	Rubber Tired Loaders_2015_25	2,508512	2,108	7,83443	6,11232	0,005	0,675	0,621	567,672	0,169	0,075758621
Rubber Tired Loaders	2015	26	50	Rubber Tired Loaders_2015_50	2,508512	2,108	7,83443	6,11232	0,005	0,675	0,621	567,672	0,169	0,075758621
Rubber Tired Loaders	2015	51	120	Rubber Tired Loaders_2015_120	1,018295	0,856	4,27362	7,01153	0,005	0,606	0,558	505,0231	0,151	0,067689655
Rubber Tired Loaders	2015	121	175	Rubber Tired Loaders_2015_175	0,708161	0,595	3,58815	6,09735	0,005	0,341	0,313	510,4677	0,152	0,068137931
Rubber Tired Loaders	2015	176	250	Rubber Tired Loaders_2015_250	0,482642	0,406	1,47986	5,36927	0,005	0,183	0,169	508,9127	0,152	0,068137931
Rubber Tired Loaders	2015	251	500	Rubber Tired Loaders_2015_500	0,494223	0,415	2,33208	5,0195	0,005	0,19	0,174	506,3723	0,151	0,067689655
Rubber Tired Loaders	2015	501	750	Rubber Tired Loaders_2015_750	0,469822	0,395	1,78908	4,55578	0,005	0,179	0,165	495,31	0,148	0,066344828
Rubber Tired Loaders	2015	751	1000	Rubber Tired Loaders_2015_1000	0,499538	0,42	1,46167	6,71262	0,005	0,197	0,181	510,0449	0,152	0,068137931
Rubber Tired Loaders	2016	16	25	Rubber Tired Loaders_2016_25	2,445921	2,055	7,79111	6,05258	0,005	0,66	0,607	561,9032	0,169	0,075758621
Rubber Tired Loaders	2016	26	50	Rubber Tired Loaders_2016_50	2,445921	2,055	7,79111	6,05258	0,005	0,66	0,607	561,9032	0,169	0,075758621
Rubber Tired Loaders	2016	51	120	Rubber Tired Loaders_2016_120	0,955142	0,803	4,21236	6,58334	0,005	0,565	0,52	499,5935	0,151	0,067689655
Rubber Tired Loaders	2016	121	175	Rubber Tired Loaders_2016_175	0,67267	0,565	3,56236	5,72558	0,005	0,319	0,294	505,1308	0,152	0,068137931
Rubber Tired Loaders	2016	176	250	Rubber Tired Loaders_2016_250	0,468005	0,393	1,45212	5,1151	0,005	0,174	0,16	503,6542	0,152	0,068137931
Rubber Tired Loaders	2016	251	500	Rubber Tired Loaders_2016_500	0,465473	0,391	2,15506	4,62743	0,005	0,174	0,16	500,4314	0,151	0,067689655
Rubber Tired Loaders	2016	501	750	Rubber Tired Loaders_2016_750	0,443728	0,373	1,70263	4,17165	0,005	0,164	0,151	491,9183	0,148	0,066344828
Rubber Tired Loaders	2016	751	1000	Rubber Tired Loaders_2016_1000	0,505153	0,424	1,46404	6,72411	0,005	0,198	0,182	504,7801	0,152	0,068137931
Rubber Tired Loaders	2017	16	25	Rubber Tired Loaders_2017_25	2,32856	1,957	7,65953	5,95377	0,005	0,633	0,582	553,5831	0,17	0,076206897
Rubber Tired Loaders	2017	26	50	Rubber Tired Loaders_2017_50	2,32856	1,957	7,65953	5,95377	0,005	0,633	0,582	553,5831	0,17	0,076206897
Rubber Tired Loaders	2017	51	120	Rubber Tired Loaders_2017_120	0,900842	0,757	4,17083	6,23569	0,005	0,53	0,487	491,8531	0,151	0,067689655
Rubber Tired Loaders	2017	121	175	Rubber Tired Loaders_2017_175	0,620654	0,522	3,5175	5,19525	0,005	0,289	0,266	497,3533	0,152	0,068137931
Rubber Tired Loaders	2017	176	250	Rubber Tired Loaders_2017_250	0,443532	0,373	1,4172	4,75473	0,005	0,162	0,149	495,9499	0,152	0,068137931
Rubber Tired Loaders	2017	251	500	Rubber Tired Loaders_2017_500	0,439436	0,369	2,06046	4,25314	0,005	0,16	0,147	492,2764	0,151	0,067689655
Rubber Tired Loaders	2017	501	750	Rubber Tired Loaders_2017_750	0,436922	0,367	1,70044	4,05049	0,005	0,16	0,147	484,3661	0,148	0,066344828
Rubber Tired Loaders	2017	751	1000	Rubber Tired Loaders_2017_1000	0,493245	0,414	1,45641	6,55319	0,005	0,192	0,176	496,8966	0,152	0,068137931
Rubber Tired Loaders	2018	16	25	Rubber Tired Loaders_2018_25	2,100538	1,765	7,29915	5,67925	0,005	0,576	0,53	545,0529	0,17	0,076206897

Rubber Tired Loaders	2018	26	50	Rubber Tired Loaders_2018_50	2,100538	1,765	7,29915	5,67925	0,005	0,576	0,53	545,0529	0,17	0,076206897
Rubber Tired Loaders	2018	51	120	Rubber Tired Loaders_2018_120	0,779856	0,655	4,04742	5,47032	0,005	0,452	0,416	484,0931	0,151	0,067689655
Rubber Tired Loaders	2018	121	175	Rubber Tired Loaders_2018_175	0,533198	0,448	3,42332	4,36814	0,005	0,242	0,223	489,5114	0,152	0,068137931
Rubber Tired Loaders	2018	176	250	Rubber Tired Loaders_2018_250	0,396861	0,333	1,34644	4,13133	0,005	0,14	0,129	487,9023	0,152	0,068137931
Rubber Tired Loaders	2018	251	500	Rubber Tired Loaders_2018_500	0,397312	0,334	1,86807	3,72607	0,005	0,14	0,128	484,5709	0,151	0,067689655
Rubber Tired Loaders	2018	501	750	Rubber Tired Loaders_2018_750	0,393495	0,331	1,55549	3,5437	0,005	0,14	0,129	476,5663	0,148	0,066344828
Rubber Tired Loaders	2018	751	1000	Rubber Tired Loaders_2018_1000	0,399711	0,336	1,21289	5,67315	0,005	0,154	0,142	488,4037	0,152	0,068137931
Rubber Tired Loaders	2019	16	25	Rubber Tired Loaders_2019_25	1,906195	1,602	6,97769	5,43193	0,005	0,518	0,476	536,2254	0,17	0,076206897
Rubber Tired Loaders	2019	26	50	Rubber Tired Loaders_2019_50	1,906195	1,602	6,97769	5,43193	0,005	0,518	0,476	536,2254	0,17	0,076206897
Rubber Tired Loaders	2019	51	120	Rubber Tired Loaders_2019_120	0,707701	0,595	3,97887	5,00611	0,005	0,402	0,37	475,8636	0,151	0,067689655
Rubber Tired Loaders	2019	121	175	Rubber Tired Loaders_2019_175	0,482139	0,405	3,38084	3,85918	0,005	0,213	0,196	481,7364	0,152	0,068137931
Rubber Tired Loaders	2019	176	250	Rubber Tired Loaders_2019_250	0,368194	0,309	1,30248	3,74452	0,005	0,126	0,116	480,0997	0,152	0,068137931
Rubber Tired Loaders	2019	251	500	Rubber Tired Loaders_2019_500	0,363843	0,306	1,7248	3,28755	0,005	0,123	0,113	477,0415	0,151	0,067689655
Rubber Tired Loaders	2019	501	750	Rubber Tired Loaders_2019_750	0,348958	0,293	1,45157	3,01875	0,005	0,118	0,109	471,1874	0,149	0,066793103
Rubber Tired Loaders	2019	751	1000	Rubber Tired Loaders_2019_1000	0,384887	0,323	1,20834	5,45926	0,005	0,146	0,134	480,523	0,152	0,068137931
Rubber Tired Loaders	2020	16	25	Rubber Tired Loaders_2020_25	1,761913	1,48	6,76793	5,25369	0,005	0,474	0,436	524,6967	0,17	0,076206897
Rubber Tired Loaders	2020	26	50	Rubber Tired Loaders_2020_50	1,761913	1,48	6,76793	5,25369	0,005	0,474	0,436	524,6967	0,17	0,076206897
Rubber Tired Loaders	2020	51	120	Rubber Tired Loaders_2020_120	0,661113	0,556	3,94839	4,68644	0,005	0,367	0,338	465,6735	0,151	0,067689655
Rubber Tired Loaders	2020	121	175	Rubber Tired Loaders_2020_175	0,450696	0,379	3,36809	3,51735	0,005	0,194	0,178	471,2135	0,152	0,068137931
Rubber Tired Loaders	2020	176	250	Rubber Tired Loaders_2020_250	0,345399	0,29	1,26885	3,42116	0,005	0,114	0,104	469,5127	0,152	0,068137931
Rubber Tired Loaders	2020	251	500	Rubber Tired Loaders_2020_500	0,343959	0,289	1,6304	3,01666	0,005	0,112	0,103	466,7831	0,151	0,067689655
Rubber Tired Loaders	2020	501	750	Rubber Tired Loaders_2020_750	0,329462	0,277	1,39991	2,76722	0,005	0,107	0,099	462,193	0,149	0,066793103
Rubber Tired Loaders	2020	751	1000	Rubber Tired Loaders_2020_1000	0,370676	0,311	1,20366	5,25309	0,005	0,139	0,127	469,9352	0,152	0,068137931
Rubber Tired Loaders	2021	16	25	Rubber Tired Loaders_2021_25	1,577419	1,325	6,44855	4,97419	0,005	0,409	0,376	524,5505	0,17	0,076206897
Rubber Tired Loaders	2021	26	50	Rubber Tired Loaders_2021_50	1,577419	1,325	6,44855	4,97419	0,005	0,409	0,376	524,5505	0,17	0,076206897
Rubber Tired Loaders	2021	51	120	Rubber Tired Loaders_2021_120	0,592559	0,498	3,8917	4,21491	0,005	0,316	0,291	466,4213	0,151	0,067689655
Rubber Tired Loaders	2021	121	175	Rubber Tired Loaders_2021_175	0,411896	0,346	3,35381	3,11886	0,005	0,171	0,157	471,0804	0,152	0,068137931
Rubber Tired Loaders	2021	176	250	Rubber Tired Loaders_2021_250	0,316703	0,266	1,24034	2,9977	0,005	0,1	0,092	469,5642	0,152	0,068137931
Rubber Tired Loaders	2021	251	500	Rubber Tired Loaders_2021_500	0,314488	0,264	1,52922	2,61037	0,005	0,097	0,09	467,9277	0,151	0,067689655
Rubber Tired Loaders	2021	501	750	Rubber Tired Loaders_2021_750	0,322962	0,271	1,39703	2,64092	0,005	0,102	0,094	462,0548	0,149	0,066793103
Rubber Tired Loaders	2021	751	1000	Rubber Tired Loaders_2021_1000	0,350105	0,294	1,2055	4,97489	0,005	0,128	0,118	471,2577	0,152	0,068137931
Rubber Tired Loaders	2022	16	25	Rubber Tired Loaders_2022_25	1,402643	1,179	6,20445	4,74817	0,005	0,354	0,326	524,7914	0,17	0,076206897
Rubber Tired Loaders	2022	26	50	Rubber Tired Loaders_2022_50	1,402643	1,179	6,20445	4,74817	0,005	0,354	0,326	524,7914	0,17	0,076206897
Rubber Tired Loaders	2022	51	120	Rubber Tired Loaders_2022_120	0,523774	0,44	3,83931	3,7684	0,005	0,267	0,245	466,4936	0,151	0,067689655
Rubber Tired Loaders	2022	121	175	Rubber Tired Loaders_2022_175	0,350975	0,295	3,30208	2,5181	0,005	0,136	0,125	470,9274	0,152	0,068137931
Rubber Tired Loaders	2022	176	250	Rubber Tired Loaders_2022_250	0,269035	0,226	1,188	2,34693	0,005	0,079	0,072	469,9041	0,152	0,068137931
Rubber Tired Loaders	2022	251	500	Rubber Tired Loaders_2022_500	0,281674	0,237	1,441	2,17525	0,005	0,081	0,075	468,1288	0,151	0,067689655
Rubber Tired Loaders	2022	501	750	Rubber Tired Loaders_2022_750	0,27713	0,233	1,31524	2,0971	0,005	0,08	0,074	463,8194	0,15	0,067241379
Rubber Tired Loaders	2022	751	1000	Rubber Tired Loaders_2022_1000	0,229104	0,193	1,16216	3,61655	0,005	0,074	0,069	472,8577	0,153	0,068586207
Rubber Tired Loaders	2023	16	25	Rubber Tired Loaders_2023_25	1,248748	1,049	5,97233	4,52113	0,005	0,304	0,279	524,304	0,17	0,076206897
Rubber Tired Loaders	2023	26	50	Rubber Tired Loaders_2023_50	1,248748	1,049	5,97233	4,52113	0,005	0,304	0,279	524,304	0,17	0,076206897
Rubber Tired Loaders	2023	51	120	Rubber Tired Loaders_2023_120	0,490267	0,412	3,82678	3,51183	0,005	0,238	0,219	466,5584	0,151	0,067689655
Rubber Tired Loaders	2023	121	175	Rubber Tired Loaders_2023_175	0,320411	0,269	3,29198	2,19586	0,005	0,118	0,108	470,6601	0,152	0,068137931
Rubber Tired Loaders	2023	176	250	Rubber Tired Loaders_2023_250	0,249759	0,21	1,17136	2,05963	0,005	0,069	0,063	469,824	0,152	0,068137931
Rubber Tired Loaders	2023	251	500	Rubber Tired Loaders_2023_500	0,258421	0,217	1,38396	1,86629	0,005	0,069	0,064	468,466	0,152	0,068137931
Rubber Tired Loaders	2023	501	750	Rubber Tired Loaders_2023_750	0,269537	0,226	1,32307	1,92719	0,005	0,074	0,069	464,5553	0,15	0,067241379
Rubber Tired Loaders	2023	751	1000	Rubber Tired Loaders_2023_1000	0,229405	0,193	1,17379	3,52792	0,005	0,071	0,065	472,3032	0,153	0,068586207
Rubber Tired Loaders	2024	16	25	Rubber Tired Loaders_2024_25	1,200513	1,009	5,98698	4,46751	0,005	0,286	0,263	524,2299	0,17	0,076206897
Rubber Tired Loaders	2024	26	50	Rubber Tired Loaders_2024_50	1,200513	1,009	5,98698	4,46751	0,005	0,286	0,263	524,2299	0,17	0,076206897
Rubber Tired Loaders	2024	51	120	Rubber Tired Loaders_2024_120	0,472864	0,397	3,83209	3,33895	0,005	0,22	0,203	466,8084	0,151	0,067689655
Rubber Tired Loaders	2024	121	175	Rubber Tired Loaders_2024_175	0,292737	0,246	3,28823	1,88365	0,005	0,1	0,092	470,3567	0,152	0,068137931
Rubber Tired Loaders	2024	176	250	Rubber Tired Loaders_2024_250	0,234511	0,197	1,1607	1,80598	0,005	0,06	0,056	469,7875	0,152	0,068137931
Rubber Tired Loaders	2024	251	500	Rubber Tired Loaders_2024_500	0,249195	0,209	1,3518	1,70166	0,005	0,063	0,058	468,5133	0,152	0,068137931
Rubber Tired Loaders	2024	501	750	Rubber Tired Loaders_2024_750	0,268468	0,226	1,33327	1,88137	0,005	0,072	0,066	464,8656	0,15	0,067241379
Rubber Tired Loaders	2024	751	1000	Rubber Tired Loaders_2024_1000	0,238754	0,201	1,19144	3,54358	0,005	0,071	0,066	472,3454	0,153	0,068586207
Rubber Tired Loaders	2025	16	25	Rubber Tired Loaders_2025_25	1,142731	0,96	5,9413	4,34846	0,005	0,259	0,238	523,9076	0,169	0,075758621
Rubber Tired Loaders	2025	26	50	Rubber Tired Loaders_2025_50	1,142731	0,96	5,9413	4,34846	0,005	0,259	0,238	523,9076	0,169	0,075758621
Rubber Tired Loaders	2025	51	120	Rubber Tired Loaders_2025_120	0,418779	0,352	3,79086	2,97026	0,005	0,179	0,165	466,8982	0,151	0,067689655
Rubber Tired Loaders	2025	121	175	Rubber Tired Loaders_2025_175	0,266202	0,224	3,28059	1,59023	0,005	0,084	0,077	470,4594	0,152	0,068137931
Rubber Tired Loaders	2025	176	250	Rubber Tired Loaders_2025_250	0,211073	0,177	1,1417	1,44207	0,005	0,048	0,045	469,8711	0,152	0,068137931
Rubber Tired Loaders	2025	251	500	Rubber Tired Loaders_2025_500	0,22979	0,193	1,2763	1,43264	0,005	0,053	0,048	469,1434	0,152	0,068137931
Rubber Tired Loaders	2025	501	750	Rubber Tired Loaders_2025_750	0,252566	0,212	1,33262	1,65408	0,005	0,064	0,059	465,0523	0,15	0,067241379
Rubber Tired Loaders	2025	751	1000	Rubber Tired Loaders_2025_1000	0,196905	0,165	1,12172	3,08852	0,005	0,052	0,048	472,4559	0,153	0,068586207
Rubber Tired Loaders	2030	16	25	Rubber Tired Loaders_2030_25	1,834	0,685	2,339	4,332	0,007	0,161	0,161	568,299	0,061	0,027344828
Rubber Tired Loaders	2030	26	50	Rubber Tired Loaders_2030_50	3,121	0,634	5,181	3,5	0,007	0,062	0,062	568,3	0,057	0,025551724
Rubber Tired Loaders	2030	51	120	Rubber Tired Loaders_2030_120	2,953	0,317	3,759	1,875	0,006	0,056	0,056	568,299	0,028	0,012551724
Rubber Tired Loaders	2030	121	175	Rubber Tired Loaders_2030_175	3,898	0,232	3,312	0,787	0,006	0,036	0,036	568,299	0,02	0,008965517
Rubber Tired Loaders	2030	176	250	Rubber Tired Loaders_2030_250	4,951	0,21	1,138	0,655	0,006	0,022	0,022	568,299	0,018	0,008068966
Rubber Tired Loaders	2030	251	500	Rubber Tired Loaders_2030_500	7,812	0,208	1,085	0,619	0,005	0,021	0,021	568,299	0,018	0,008068966
Rubber Tired Loaders	2030	501	750	Rubber Tired Loaders_2030_750	16,018	0,208	1,085	0,627	0,005	0,022	0,022	568,299	0,018	0,008068966
Rubber Tired Loaders	2030	751	1000	Rubber Tired Loaders_2030_1000	20,168	0,214	1,099	2,722	0,005	0,039	0,039	568,299	0,019	0,008517241
Rubber Tired Loaders	2035	16	25	Rubber Tired Loaders_2035_25	1,834	0,685	2,339	4,332	0,007	0,161	0,161	568,299	0,061	0,027344828
Rubber Tired Loaders	2035	26	50	Rubber Tired Loaders_2035_50	2,833	0,575	5,126	3,337	0,007	0,035	0,035	568,299	0,051	0,022862069

Rubber Tired Loaders	2035	51	120	Rubber Tired Loaders_2035_120	2,663	0,286	3,751	1,639	0,006	0,033	0,033	568,299	0,025	0,011206897
Rubber Tired Loaders	2035	121	175	Rubber Tired Loaders_2035_175	3,376	0,2	3,312	0,481	0,006	0,022	0,022	568,299	0,018	0,008068966
Rubber Tired Loaders	2035	176	250	Rubber Tired Loaders_2035_250	4,514	0,191	1,129	0,434	0,006	0,015	0,015	568,299	0,017	0,00762069
Rubber Tired Loaders	2035	251	500	Rubber Tired Loaders_2035_500	7,156	0,191	1,076	0,416	0,005	0,015	0,015	568,299	0,017	0,00762069
Rubber Tired Loaders	2035	501	750	Rubber Tired Loaders_2035_750	14,669	0,191	1,076	0,421	0,005	0,015	0,015	568,299	0,017	0,00762069
Rubber Tired Loaders	2035	751	1000	Rubber Tired Loaders_2035_1000	18,204	0,193	1,082	2,584	0,005	0,03	0,03	568,299	0,017	0,00762069
Rubber Tired Loaders	2040	16	25	Rubber Tired Loaders_2040_25	1,834	0,685	2,339	4,332	0,007	0,161	0,161	568,299	0,061	0,027344828
Rubber Tired Loaders	2040	26	50	Rubber Tired Loaders_2040_50	2,684	0,545	5,102	3,283	0,007	0,024	0,024	568,3	0,049	0,021965517
Rubber Tired Loaders	2040	51	120	Rubber Tired Loaders_2040_120	2,53	0,271	3,748	1,543	0,006	0,022	0,022	568,3	0,024	0,010758621
Rubber Tired Loaders	2040	121	175	Rubber Tired Loaders_2040_175	3,172	0,188	3,314	0,365	0,006	0,016	0,016	568,299	0,017	0,00762069
Rubber Tired Loaders	2040	176	250	Rubber Tired Loaders_2040_250	4,375	0,185	1,128	0,346	0,006	0,013	0,013	568,299	0,016	0,007172414
Rubber Tired Loaders	2040	251	500	Rubber Tired Loaders_2040_500	6,953	0,185	1,076	0,338	0,005	0,013	0,013	568,3	0,016	0,007172414
Rubber Tired Loaders	2040	501	750	Rubber Tired Loaders_2040_750	14,247	0,185	1,076	0,34	0,005	0,013	0,013	568,299	0,016	0,007172414
Rubber Tired Loaders	2040	751	1000	Rubber Tired Loaders_2040_1000	17,496	0,186	1,076	2,522	0,005	0,026	0,026	568,299	0,016	0,007172414
Scrapers	1990	51	120	Scrapers_1990_120	7,335	2,413	5,806	15,182	0,791	1,373	1,373	568,299	0,217	0,097275862
Scrapers	1990	121	175	Scrapers_1990_175	8,743	1,823	5,174	14,491	0,758	1,017	1,017	568,299	0,164	0,073517241
Scrapers	1990	176	250	Scrapers_1990_250	12,369	1,823	5,174	14,491	0,758	1,017	1,017	568,299	0,164	0,073517241
Scrapers	1990	251	500	Scrapers_1990_500	16,73	1,607	11,673	13,709	0,662	0,867	0,867	568,299	0,145	0,065
Scrapers	1990	501	750	Scrapers_1990_750	28,902	1,607	11,673	13,709	1,018	0,883	0,883	568,299	0,145	0,065
Scrapers	2000	51	120	Scrapers_2000_120	6,006	1,975	4,906	11,177	0,06	0,949	0,949	568,299	0,178	0,079793103
Scrapers	2000	121	175	Scrapers_2000_175	6,456	1,346	4,046	10,226	0,057	0,572	0,572	568,299	0,121	0,054241379
Scrapers	2000	176	250	Scrapers_2000_250	8,023	1,183	3,423	9,944	0,057	0,493	0,493	568,299	0,106	0,047517241
Scrapers	2000	251	500	Scrapers_2000_500	11,061	1,062	6,04	9,42	0,05	0,43	0,43	568,299	0,095	0,042586207
Scrapers	2000	501	750	Scrapers_2000_750	19,108	1,062	6,04	9,42	0,052	0,43	0,43	568,299	0,095	0,042586207
Scrapers	2005	51	120	Scrapers_2005_120	5,36	1,763	4,636	9,807	0,06	0,901	0,901	568,299	0,159	0,071275862
Scrapers	2005	121	175	Scrapers_2005_175	5,592	1,166	3,76	8,934	0,057	0,514	0,514	568,299	0,105	0,047068966
Scrapers	2005	176	250	Scrapers_2005_250	6,251	0,921	2,602	8,58	0,057	0,377	0,377	568,299	0,083	0,037206897
Scrapers	2005	251	500	Scrapers_2005_500	8,477	0,814	4,07	7,854	0,05	0,331	0,331	568,3	0,073	0,032724138
Scrapers	2005	501	750	Scrapers_2005_750	14,794	0,822	4,063	7,99	0,052	0,333	0,333	568,299	0,074	0,033172414
Scrapers	2010	51	120	Scrapers_2010_120	0,828186	0,696	3,97834	7,09453	0,005	0,507	0,466	537,9051	0,157	0,07037931
Scrapers	2010	121	175	Scrapers_2010_175	0,907518	0,763	3,83189	8,55764	0,005	0,444	0,408	532,551	0,155	0,069482759
Scrapers	2010	176	250	Scrapers_2010_250	0,939807	0,79	3,25278	9,42837	0,005	0,434	0,399	520,9381	0,152	0,068137931
Scrapers	2010	251	500	Scrapers_2010_500	0,595043	0,5	4,1939	6,75544	0,005	0,272	0,25	525,1553	0,153	0,068586207
Scrapers	2010	501	750	Scrapers_2010_750	0,454495	0,382	3,13671	5,53444	0,005	0,209	0,192	525,522	0,153	0,068586207
Scrapers	2011	51	120	Scrapers_2011_120	0,831534	0,699	4,00655	7,06921	0,005	0,509	0,469	536,4691	0,157	0,07037931
Scrapers	2011	121	175	Scrapers_2011_175	0,907072	0,762	3,84357	8,51777	0,005	0,444	0,409	531,1835	0,155	0,069482759
Scrapers	2011	176	250	Scrapers_2011_250	0,933155	0,784	3,22574	9,34756	0,005	0,43	0,396	519,6705	0,152	0,068137931
Scrapers	2011	251	500	Scrapers_2011_500	0,590447	0,496	4,14563	6,64672	0,005	0,268	0,246	523,9083	0,153	0,068586207
Scrapers	2011	501	750	Scrapers_2011_750	0,45862	0,385	3,14165	5,48614	0,005	0,208	0,191	524,1241	0,153	0,068586207
Scrapers	2012	51	120	Scrapers_2012_120	0,847004	0,712	4,04661	7,11199	0,005	0,519	0,477	535,1238	0,157	0,07037931
Scrapers	2012	121	175	Scrapers_2012_175	0,915185	0,769	3,8659	8,53485	0,005	0,448	0,412	529,8158	0,155	0,069482759
Scrapers	2012	176	250	Scrapers_2012_250	0,935111	0,786	3,22909	9,33173	0,005	0,43	0,396	518,3695	0,152	0,068137931
Scrapers	2012	251	500	Scrapers_2012_500	0,596548	0,501	4,16192	6,64299	0,005	0,269	0,247	522,6784	0,153	0,068586207
Scrapers	2012	501	750	Scrapers_2012_750	0,468161	0,393	3,16628	5,49999	0,005	0,209	0,193	522,7621	0,153	0,068586207
Scrapers	2013	51	120	Scrapers_2013_120	0,850862	0,715	4,06971	7,08801	0,005	0,523	0,482	532,4144	0,157	0,07037931
Scrapers	2013	121	175	Scrapers_2013_175	0,895558	0,753	3,85136	8,33026	0,005	0,438	0,403	527,0754	0,155	0,069482759
Scrapers	2013	176	250	Scrapers_2013_250	0,923168	0,776	3,18463	9,20338	0,005	0,423	0,389	515,7585	0,152	0,068137931
Scrapers	2013	251	500	Scrapers_2013_500	0,590637	0,496	4,08663	6,51716	0,005	0,264	0,242	520,0884	0,153	0,068586207
Scrapers	2013	501	750	Scrapers_2013_750	0,462466	0,389	3,09865	5,3398	0,005	0,204	0,187	520,1031	0,153	0,068586207
Scrapers	2014	51	120	Scrapers_2014_120	0,855598	0,719	4,09983	7,0654	0,005	0,526	0,484	529,9445	0,157	0,07037931
Scrapers	2014	121	175	Scrapers_2014_175	0,85473	0,718	3,80661	7,90715	0,005	0,419	0,385	524,1709	0,155	0,069482759
Scrapers	2014	176	250	Scrapers_2014_250	0,882887	0,742	3,06131	8,81494	0,005	0,403	0,371	512,8529	0,152	0,068137931
Scrapers	2014	251	500	Scrapers_2014_500	0,569739	0,479	3,89824	6,23299	0,005	0,251	0,231	517,3608	0,153	0,068586207
Scrapers	2014	501	750	Scrapers_2014_750	0,438954	0,369	2,84564	5,01248	0,005	0,19	0,174	517,3937	0,153	0,068586207
Scrapers	2015	51	120	Scrapers_2015_120	0,869823	0,731	4,13678	7,10509	0,005	0,535	0,492	524,5601	0,157	0,07037931
Scrapers	2015	121	175	Scrapers_2015_175	0,849601	0,714	3,80865	7,76471	0,005	0,415	0,382	518,8294	0,155	0,069482759
Scrapers	2015	176	250	Scrapers_2015_250	0,868271	0,73	3,00753	8,66317	0,005	0,395	0,364	507,5699	0,152	0,068137931
Scrapers	2015	251	500	Scrapers_2015_500	0,561967	0,472	3,788	6,08577	0,005	0,246	0,226	511,9471	0,153	0,068586207
Scrapers	2015	501	750	Scrapers_2015_750	0,427981	0,36	2,68469	4,83862	0,005	0,182	0,167	512,0837	0,153	0,068586207
Scrapers	2016	51	120	Scrapers_2016_120	0,883537	0,742	4,17273	7,14312	0,005	0,543	0,5	519,1668	0,157	0,07037931
Scrapers	2016	121	175	Scrapers_2016_175	0,818244	0,688	3,78062	7,3844	0,005	0,397	0,365	513,4363	0,155	0,069482759
Scrapers	2016	176	250	Scrapers_2016_250	0,814194	0,684	2,8398	8,10864	0,005	0,367	0,338	502,255	0,151	0,067689655
Scrapers	2016	251	500	Scrapers_2016_500	0,538344	0,452	3,60633	5,75749	0,005	0,232	0,213	506,3503	0,153	0,068586207
Scrapers	2016	501	750	Scrapers_2016_750	0,404454	0,34	2,48181	4,48425	0,005	0,167	0,154	506,6381	0,153	0,068586207
Scrapers	2017	51	120	Scrapers_2017_120	0,896722	0,753	4,20744	7,17946	0,005	0,551	0,507	511,1123	0,157	0,07037931
Scrapers	2017	121	175	Scrapers_2017_175	0,748819	0,629	3,70478	6,67066	0,005	0,359	0,331	505,3309	0,155	0,069482759
Scrapers	2017	176	250	Scrapers_2017_250	0,74607	0,627	2,64676	7,39867	0,005	0,333	0,306	494,5231	0,152	0,068137931
Scrapers	2017	251	500	Scrapers_2017_500	0,505877	0,425	3,33699	5,33951	0,005	0,214	0,197	498,4571	0,153	0,068586207
Scrapers	2017	501	750	Scrapers_2017_750	0,386598	0,325	2,29479	4,21648	0,005	0,156	0,143	498,6929	0,153	0,068586207
Scrapers	2018	51	120	Scrapers_2018_120	0,881019	0,74	4,20429	7,03577	0,005	0,543	0,499	502,8288	0,157	0,07037931
Scrapers	2018	121	175	Scrapers_2018_175	0,640866	0,539	3,56847	5,64105	0,005	0,303	0,279	497,3396	0,155	0,069482759
Scrapers	2018	176	250	Scrapers_2018_250	0,662403	0,557	2,40704	6,56304	0,005	0,29	0,267	486,9908	0,152	0,068137931
Scrapers	2018	251	500	Scrapers_2018_500	0,439318	0,369	2,82811	4,56771	0,005	0,18	0,166	490,7734	0,153	0,068586207

Scrapers	2018	501	750	Scrapers_2018_750	0,349618	0,294	1,96493	3,74582	0,005	0,135	0,124	490,5775	0,153	0,068586207
Scrapers	2019	51	120	Scrapers_2019_120	0,854498	0,718	4,19661	6,84136	0,005	0,525	0,483	494,1	0,156	0,069931034
Scrapers	2019	121	175	Scrapers_2019_175	0,606989	0,51	3,53297	5,26356	0,005	0,283	0,261	489,2546	0,155	0,069482759
Scrapers	2019	176	250	Scrapers_2019_250	0,596624	0,501	2,23321	5,83102	0,005	0,257	0,236	479,0317	0,152	0,068137931
Scrapers	2019	251	500	Scrapers_2019_500	0,40804	0,343	2,59466	4,15646	0,005	0,163	0,15	482,7319	0,153	0,068586207
Scrapers	2019	501	750	Scrapers_2019_750	0,329384	0,277	1,82903	3,43103	0,005	0,123	0,113	482,5963	0,153	0,068586207
Scrapers	2020	51	120	Scrapers_2020_120	0,834143	0,701	4,19756	6,6767	0,005	0,51	0,469	483,745	0,156	0,069931034
Scrapers	2020	121	175	Scrapers_2020_175	0,568453	0,478	3,50114	4,86851	0,005	0,262	0,241	478,6077	0,155	0,069482759
Scrapers	2020	176	250	Scrapers_2020_250	0,531032	0,446	2,06469	5,089	0,005	0,223	0,205	468,9883	0,152	0,068137931
Scrapers	2020	251	500	Scrapers_2020_500	0,380326	0,32	2,40063	3,78254	0,005	0,148	0,136	472,1751	0,153	0,068586207
Scrapers	2020	501	750	Scrapers_2020_750	0,311991	0,262	1,72502	3,12592	0,005	0,113	0,104	471,7776	0,153	0,068586207
Scrapers	2021	51	120	Scrapers_2021_120	0,837922	0,704	4,21819	6,65882	0,005	0,512	0,471	483,7128	0,156	0,069931034
Scrapers	2021	121	175	Scrapers_2021_175	0,514014	0,432	3,45599	4,34133	0,005	0,232	0,213	478,654	0,155	0,069482759
Scrapers	2021	176	250	Scrapers_2021_250	0,464853	0,391	1,88374	4,36706	0,005	0,189	0,174	469,1258	0,152	0,068137931
Scrapers	2021	251	500	Scrapers_2021_500	0,356021	0,299	2,25454	3,44481	0,005	0,134	0,123	472,4636	0,153	0,068586207
Scrapers	2021	501	750	Scrapers_2021_750	0,298025	0,25	1,65772	2,88702	0,005	0,105	0,097	471,7859	0,153	0,068586207
Scrapers	2022	51	120	Scrapers_2022_120	0,809995	0,681	4,20484	6,45548	0,005	0,494	0,454	483,4481	0,156	0,069931034
Scrapers	2022	121	175	Scrapers_2022_175	0,463814	0,39	3,41662	3,83296	0,005	0,204	0,187	478,7411	0,155	0,069482759
Scrapers	2022	176	250	Scrapers_2022_250	0,406319	0,341	1,74265	3,66905	0,005	0,16	0,147	469,2686	0,152	0,068137931
Scrapers	2022	251	500	Scrapers_2022_500	0,313802	0,264	2,05212	2,87856	0,005	0,112	0,103	473,2304	0,153	0,068586207
Scrapers	2022	501	750	Scrapers_2022_750	0,266627	0,224	1,50816	2,47537	0,005	0,09	0,083	471,2788	0,152	0,068137931
Scrapers	2023	51	120	Scrapers_2023_120	0,7496	0,63	4,14443	6,02603	0,005	0,458	0,421	483,0296	0,156	0,069931034
Scrapers	2023	121	175	Scrapers_2023_175	0,430003	0,361	3,39533	3,47913	0,005	0,184	0,169	478,6814	0,155	0,069482759
Scrapers	2023	176	250	Scrapers_2023_250	0,37772	0,317	1,67839	3,2838	0,005	0,144	0,133	469,5597	0,152	0,068137931
Scrapers	2023	251	500	Scrapers_2023_500	0,301363	0,253	1,97527	2,66611	0,005	0,105	0,096	473,1772	0,153	0,068586207
Scrapers	2023	501	750	Scrapers_2023_750	0,26361	0,222	1,51295	2,38587	0,005	0,087	0,08	471,2953	0,152	0,068137931
Scrapers	2024	51	120	Scrapers_2024_120	0,683919	0,575	4,09486	5,63222	0,005	0,414	0,381	482,7009	0,156	0,069931034
Scrapers	2024	121	175	Scrapers_2024_175	0,399992	0,336	3,37249	3,15631	0,005	0,166	0,153	478,8089	0,155	0,069482759
Scrapers	2024	176	250	Scrapers_2024_250	0,358714	0,301	1,62739	3,01379	0,005	0,133	0,122	469,3521	0,152	0,068137931
Scrapers	2024	251	500	Scrapers_2024_500	0,291137	0,245	1,92055	2,47694	0,005	0,098	0,09	472,8455	0,153	0,068586207
Scrapers	2024	501	750	Scrapers_2024_750	0,253257	0,213	1,46065	2,18653	0,005	0,081	0,074	471,4291	0,152	0,068137931
Scrapers	2025	51	120	Scrapers_2025_120	0,673967	0,566	4,09423	5,50259	0,005	0,405	0,372	482,3629	0,156	0,069931034
Scrapers	2025	121	175	Scrapers_2025_175	0,34526	0,29	3,3209	2,63098	0,005	0,137	0,126	478,9476	0,155	0,069482759
Scrapers	2025	176	250	Scrapers_2025_250	0,346529	0,291	1,60249	2,80326	0,005	0,125	0,115	469,4459	0,152	0,068137931
Scrapers	2025	251	500	Scrapers_2025_500	0,257328	0,216	1,7318	2,05051	0,005	0,081	0,074	472,5394	0,153	0,068586207
Scrapers	2025	501	750	Scrapers_2025_750	0,218534	0,184	1,33825	1,71287	0,005	0,064	0,059	472,115	0,153	0,068586207
Scrapers	2030	51	120	Scrapers_2030_120	1,248	0,41	3,866	2,384	0,006	0,111	0,111	568,299	0,037	0,016586207
Scrapers	2030	121	175	Scrapers_2030_175	1,445	0,301	3,389	1,32	0,006	0,068	0,068	568,299	0,027	0,012103448
Scrapers	2030	176	250	Scrapers_2030_250	1,794	0,264	1,206	1,149	0,006	0,042	0,042	568,299	0,023	0,010310345
Scrapers	2030	251	500	Scrapers_2030_500	2,697	0,259	1,184	1,057	0,005	0,04	0,04	568,299	0,023	0,010310345
Scrapers	2030	501	750	Scrapers_2030_750	4,666	0,259	1,184	1,075	0,005	0,04	0,04	568,299	0,023	0,010310345
Scrapers	2035	51	120	Scrapers_2035_120	1,058	0,348	3,842	1,943	0,006	0,064	0,064	568,299	0,031	0,013896552
Scrapers	2035	121	175	Scrapers_2035_175	1,199	0,25	3,382	0,824	0,006	0,04	0,04	568,299	0,022	0,009862069
Scrapers	2035	176	250	Scrapers_2035_250	1,553	0,229	1,175	0,717	0,006	0,026	0,026	568,299	0,02	0,008965517
Scrapers	2035	251	500	Scrapers_2035_500	2,356	0,226	1,123	0,674	0,005	0,025	0,025	568,3	0,02	0,008965517
Scrapers	2035	501	750	Scrapers_2035_750	4,075	0,226	1,123	0,682	0,005	0,025	0,025	568,299	0,02	0,008965517
Scrapers	2040	51	120	Scrapers_2040_120	0,962	0,316	3,833	1,715	0,006	0,04	0,04	568,299	0,028	0,012551724
Scrapers	2040	121	175	Scrapers_2040_175	1,063	0,221	3,381	0,549	0,006	0,026	0,026	568,299	0,02	0,008965517
Scrapers	2040	176	250	Scrapers_2040_250	1,425	0,21	1,159	0,498	0,006	0,018	0,018	568,3	0,018	0,008068966
Scrapers	2040	251	500	Scrapers_2040_500	2,175	0,209	1,1	0,475	0,005	0,017	0,017	568,299	0,018	0,008068966
Scrapers	2040	501	750	Scrapers_2040_750	3,76	0,209	1,1	0,48	0,005	0,017	0,017	568,299	0,018	0,008068966
Signal Boards	1990	6	15	Signal Boards_1990_15	2,838	1,804	4,999	9,999	1,049	0,975	0,975	568,299	0,162	0,07262069
Signal Boards	1990	26	50	Signal Boards_1990_50	33,688	3,65	7,626	7,518	0,871	1,035	1,035	568,299	0,329	0,147482759
Signal Boards	1990	51	120	Signal Boards_1990_120	41,675	2,037	5,201	13,738	0,791	1,095	1,095	568,3	0,183	0,082034483
Signal Boards	1990	121	175	Signal Boards_1990_175	54,982	1,395	4,603	12,364	0,758	0,728	0,728	568,3	0,125	0,056034483
Signal Boards	1990	176	250	Signal Boards_1990_250	90,827	1,685	5,563	14,94	0,917	0,88	0,88	686,695	0,152	0,068137931
Signal Boards	2000	6	15	Signal Boards_2000_15	2,085	1,325	4,257	7,675	0,079	0,61	0,61	568,299	0,119	0,053344828
Signal Boards	2000	26	50	Signal Boards_2000_50	31,608	3,424	7,268	6,709	0,066	0,765	0,765	568,299	0,309	0,138517241
Signal Boards	2000	51	120	Signal Boards_2000_120	33,68	1,646	4,338	9,835	0,06	0,756	0,756	568,299	0,148	0,066344828
Signal Boards	2000	121	175	Signal Boards_2000_175	43,484	1,103	3,53	8,941	0,057	0,447	0,447	568,299	0,099	0,04437931
Signal Boards	2000	176	250	Signal Boards_2000_250	59,587	1,105	3,359	10,385	0,069	0,438	0,438	686,695	0,099	0,04437931
Signal Boards	2005	6	15	Signal Boards_2005_15	1,168	0,742	3,469	4,981	0,079	0,35	0,35	568,299	0,066	0,029586207
Signal Boards	2005	26	50	Signal Boards_2005_50	27,711	3,002	6,663	6,227	0,066	0,704	0,704	568,299	0,27	0,121034483
Signal Boards	2005	51	120	Signal Boards_2005_120	28,596	1,398	4	8,234	0,06	0,695	0,695	568,299	0,126	0,056482759
Signal Boards	2005	121	175	Signal Boards_2005_175	35,881	0,91	3,185	7,528	0,057	0,383	0,383	568,3	0,082	0,036758621
Signal Boards	2005	176	250	Signal Boards_2005_250	41,93	0,778	2,245	8,577	0,069	0,303	0,303	686,695	0,07	0,03137931
Signal Boards	2010	6	15	Signal Boards_2010_15	1,04	0,661	3,469	4,142	0,008	0,155	0,155	568,299	0,059	0,026448276
Signal Boards	2010	26	50	Signal Boards_2010_50	21,63	2,343	6,009	5,792	0,007	0,571	0,571	568,299	0,211	0,094586207
Signal Boards	2010	51	120	Signal Boards_2010_120	21,667	1,059	3,811	6,693	0,006	0,56	0,56	568,299	0,095	0,042586207
Signal Boards	2010	121	175	Signal Boards_2010_175	27,641	0,701	3,102	5,958	0,006	0,311	0,311	568,299	0,063	0,028241379
Signal Boards	2010	176	250	Signal Boards_2010_250	29,698	0,551	1,651	6,749	0,007	0,212	0,212	686,695	0,049	0,021965517
Signal Boards	2011	6	15	Signal Boards_2011_15	1,04	0,661	3,469	4,142	0,008	0,156	0,156	568,299	0,059	0,026448276
Signal Boards	2011	26	50	Signal Boards_2011_50	20,109	2,178	5,834	5,698	0,007	0,541	0,541	568,299	0,196	0,087862069

Signal Boards	2011	51	120	Signal Boards_2011_120	20,187	0,986	3,774	6,327	0,006	0,535	0,535	568,299	0,089	0,039896552
Signal Boards	2011	121	175	Signal Boards_2011_175	25,933	0,658	3,09	5,615	0,006	0,298	0,298	568,299	0,059	0,026448276
Signal Boards	2011	176	250	Signal Boards_2011_250	27,264	0,506	1,548	6,272	0,007	0,19	0,19	686,695	0,045	0,020172414
Signal Boards	2012	6	15	Signal Boards_2012_15	1,04	0,661	3,469	4,142	0,008	0,16	0,16	568,299	0,059	0,026448276
Signal Boards	2012	26	50	Signal Boards_2012_50	18,413	1,995	5,632	5,596	0,007	0,508	0,508	568,299	0,18	0,080689655
Signal Boards	2012	51	120	Signal Boards_2012_120	18,605	0,909	3,733	5,923	0,006	0,498	0,498	568,299	0,082	0,036758621
Signal Boards	2012	121	175	Signal Boards_2012_175	24,082	0,611	3,077	5,246	0,006	0,275	0,275	568,3	0,055	0,024655172
Signal Boards	2012	176	250	Signal Boards_2012_250	25,308	0,469	1,483	5,81	0,007	0,171	0,171	686,695	0,042	0,018827586
Signal Boards	2013	6	15	Signal Boards_2013_15	1,04	0,661	3,469	4,142	0,008	0,161	0,161	568,299	0,059	0,026448276
Signal Boards	2013	26	50	Signal Boards_2013_50	16,687	1,808	5,427	5,362	0,007	0,465	0,465	568,299	0,163	0,073068966
Signal Boards	2013	51	120	Signal Boards_2013_120	17,043	0,833	3,694	5,532	0,006	0,456	0,456	568,299	0,075	0,03362069
Signal Boards	2013	121	175	Signal Boards_2013_175	22,253	0,564	3,067	4,903	0,006	0,252	0,252	568,3	0,05	0,022413793
Signal Boards	2013	176	250	Signal Boards_2013_250	23,66	0,439	1,439	5,369	0,007	0,156	0,156	686,695	0,039	0,017482759
Signal Boards	2014	6	15	Signal Boards_2014_15	1,04	0,661	3,469	4,142	0,008	0,161	0,161	568,299	0,059	0,026448276
Signal Boards	2014	26	50	Signal Boards_2014_50	15,005	1,625	5,231	5,139	0,007	0,422	0,422	568,299	0,146	0,065448276
Signal Boards	2014	51	120	Signal Boards_2014_120	15,539	0,759	3,658	5,186	0,006	0,414	0,414	568,299	0,068	0,030482759
Signal Boards	2014	121	175	Signal Boards_2014_175	20,512	0,52	3,058	4,582	0,006	0,228	0,228	568,299	0,046	0,02062069
Signal Boards	2014	176	250	Signal Boards_2014_250	22,034	0,408	1,402	4,857	0,007	0,141	0,141	686,695	0,036	0,016137931
Signal Boards	2015	6	15	Signal Boards_2015_15	1,04	0,661	3,469	4,142	0,008	0,161	0,161	568,299	0,059	0,026448276
Signal Boards	2015	26	50	Signal Boards_2015_50	13,489	1,461	5,068	4,943	0,007	0,382	0,382	568,299	0,131	0,058724138
Signal Boards	2015	51	120	Signal Boards_2015_120	14,067	0,687	3,624	4,791	0,006	0,371	0,371	568,299	0,062	0,027793103
Signal Boards	2015	121	175	Signal Boards_2015_175	18,694	0,474	3,052	4,136	0,006	0,205	0,205	568,299	0,042	0,018827586
Signal Boards	2015	176	250	Signal Boards_2015_250	20,523	0,38	1,371	4,365	0,007	0,127	0,127	686,695	0,034	0,015241379
Signal Boards	2016	6	15	Signal Boards_2016_15	1,04	0,661	3,469	4,142	0,008	0,161	0,161	568,299	0,059	0,026448276
Signal Boards	2016	26	50	Signal Boards_2016_50	12,061	1,306	4,921	4,761	0,007	0,343	0,343	568,299	0,117	0,052448276
Signal Boards	2016	51	120	Signal Boards_2016_120	12,653	0,618	3,594	4,414	0,006	0,33	0,33	568,299	0,055	0,024655172
Signal Boards	2016	121	175	Signal Boards_2016_175	16,949	0,43	3,047	3,708	0,006	0,183	0,183	568,299	0,038	0,017034483
Signal Boards	2016	176	250	Signal Boards_2016_250	19,106	0,354	1,344	3,894	0,007	0,114	0,114	686,695	0,031	0,013896552
Signal Boards	2017	6	15	Signal Boards_2017_15	1,04	0,661	3,469	4,142	0,008	0,161	0,161	568,299	0,059	0,026448276
Signal Boards	2017	26	50	Signal Boards_2017_50	10,695	1,158	4,785	4,59	0,007	0,306	0,306	568,299	0,104	0,04662069
Signal Boards	2017	51	120	Signal Boards_2017_120	11,32	0,553	3,566	4,059	0,006	0,29	0,29	568,299	0,049	0,021965517
Signal Boards	2017	121	175	Signal Boards_2017_175	15,322	0,388	3,044	3,305	0,006	0,161	0,161	568,299	0,035	0,015689655
Signal Boards	2017	176	250	Signal Boards_2017_250	17,83	0,33	1,323	3,452	0,007	0,101	0,101	686,695	0,029	0,013
Signal Boards	2018	6	15	Signal Boards_2018_15	1,04	0,661	3,469	4,142	0,008	0,161	0,161	568,299	0,059	0,026448276
Signal Boards	2018	26	50	Signal Boards_2018_50	9,4	1,018	4,657	4,427	0,007	0,27	0,27	568,299	0,091	0,040793103
Signal Boards	2018	51	120	Signal Boards_2018_120	10,078	0,492	3,541	3,723	0,006	0,252	0,252	568,299	0,044	0,019724138
Signal Boards	2018	121	175	Signal Boards_2018_175	13,836	0,351	3,043	2,93	0,006	0,141	0,141	568,299	0,031	0,013896552
Signal Boards	2018	176	250	Signal Boards_2018_250	16,678	0,309	1,306	3,04	0,007	0,09	0,09	686,695	0,027	0,012103448
Signal Boards	2019	6	15	Signal Boards_2019_15	1,04	0,661	3,47	4,142	0,008	0,161	0,161	568,299	0,059	0,026448276
Signal Boards	2019	26	50	Signal Boards_2019_50	8,189	0,887	4,538	4,272	0,007	0,236	0,236	568,3	0,08	0,035862069
Signal Boards	2019	51	120	Signal Boards_2019_120	8,938	0,437	3,519	3,41	0,006	0,216	0,216	568,299	0,039	0,017482759
Signal Boards	2019	121	175	Signal Boards_2019_175	12,677	0,321	3,043	2,601	0,006	0,125	0,125	568,299	0,029	0,013
Signal Boards	2019	176	250	Signal Boards_2019_250	15,682	0,291	1,292	2,676	0,007	0,08	0,08	686,695	0,026	0,011655172
Signal Boards	2020	6	15	Signal Boards_2020_15	1,04	0,661	3,469	4,142	0,008	0,161	0,161	568,299	0,059	0,026448276
Signal Boards	2020	26	50	Signal Boards_2020_50	7,28	0,788	4,448	4,132	0,007	0,206	0,206	568,299	0,071	0,031827586
Signal Boards	2020	51	120	Signal Boards_2020_120	8,081	0,395	3,504	3,134	0,006	0,187	0,187	568,299	0,035	0,015689655
Signal Boards	2020	121	175	Signal Boards_2020_175	11,756	0,298	3,043	2,309	0,006	0,11	0,11	568,299	0,026	0,011655172
Signal Boards	2020	176	250	Signal Boards_2020_250	14,813	0,274	1,281	2,35	0,007	0,071	0,071	686,695	0,024	0,010758621
Signal Boards	2021	6	15	Signal Boards_2021_15	1,04	0,661	3,469	4,142	0,008	0,161	0,161	568,299	0,059	0,026448276
Signal Boards	2021	26	50	Signal Boards_2021_50	6,598	0,714	4,38	4,002	0,007	0,179	0,179	568,299	0,064	0,028689655
Signal Boards	2021	51	120	Signal Boards_2021_120	7,434	0,363	3,493	2,889	0,006	0,162	0,162	568,299	0,032	0,014344828
Signal Boards	2021	121	175	Signal Boards_2021_175	10,965	0,278	3,043	2,043	0,006	0,098	0,098	568,299	0,025	0,011206897
Signal Boards	2021	176	250	Signal Boards_2021_250	14,033	0,26	1,273	2,053	0,007	0,063	0,063	686,695	0,023	0,010310345
Signal Boards	2022	6	15	Signal Boards_2022_15	1,04	0,661	3,469	4,142	0,008	0,161	0,161	568,3	0,059	0,026448276
Signal Boards	2022	26	50	Signal Boards_2022_50	6,047	0,655	4,325	3,88	0,007	0,154	0,154	568,299	0,059	0,026448276
Signal Boards	2022	51	120	Signal Boards_2022_120	6,908	0,337	3,484	2,668	0,006	0,141	0,141	568,299	0,03	0,013448276
Signal Boards	2022	121	175	Signal Boards_2022_175	10,249	0,26	3,044	1,801	0,006	0,086	0,086	568,299	0,023	0,010310345
Signal Boards	2022	176	250	Signal Boards_2022_250	13,317	0,247	1,266	1,782	0,007	0,055	0,055	686,695	0,022	0,009862069
Signal Boards	2023	6	15	Signal Boards_2023_15	1,04	0,661	3,469	4,142	0,008	0,161	0,161	568,299	0,059	0,026448276
Signal Boards	2023	26	50	Signal Boards_2023_50	5,57	0,603	4,282	3,767	0,007	0,132	0,132	568,299	0,054	0,024206897
Signal Boards	2023	51	120	Signal Boards_2023_120	6,449	0,315	3,478	2,472	0,006	0,122	0,122	568,299	0,028	0,012551724
Signal Boards	2023	121	175	Signal Boards_2023_175	9,619	0,244	3,045	1,602	0,006	0,075	0,075	568,299	0,022	0,009862069
Signal Boards	2023	176	250	Signal Boards_2023_250	12,678	0,235	1,263	1,562	0,007	0,048	0,048	686,695	0,021	0,009413793
Signal Boards	2024	6	15	Signal Boards_2024_15	1,04	0,661	3,469	4,142	0,008	0,161	0,161	568,299	0,059	0,026448276
Signal Boards	2024	26	50	Signal Boards_2024_50	5,168	0,559	4,247	3,662	0,007	0,114	0,114	568,299	0,05	0,022413793
Signal Boards	2024	51	120	Signal Boards_2024_120	6,055	0,296	3,474	2,315	0,006	0,105	0,105	568,299	0,026	0,011655172
Signal Boards	2024	121	175	Signal Boards_2024_175	9,047	0,229	3,047	1,427	0,006	0,065	0,065	568,299	0,02	0,008965517
Signal Boards	2024	176	250	Signal Boards_2024_250	12,079	0,224	1,259	1,37	0,007	0,041	0,041	686,695	0,02	0,008965517
Signal Boards	2025	6	15	Signal Boards_2025_15	1,04	0,661	3,469	4,142	0,008	0,161	0,161	568,299	0,059	0,026448276
Signal Boards	2025	26	50	Signal Boards_2025_50	4,819	0,522	4,217	3,561	0,007	0,098	0,098	568,299	0,047	0,021068966
Signal Boards	2025	51	120	Signal Boards_2025_120	5,705	0,278	3,47	2,179	0,006	0,089	0,089	568,299	0,025	0,011206897
Signal Boards	2025	121	175	Signal Boards_2025_175	8,5	0,215	3,049	1,262	0,006	0,055	0,055	568,299	0,019	0,008517241
Signal Boards	2025	176	250	Signal Boards_2025_250	11,509	0,213	1,257	1,192	0,007	0,035	0,035	686,695	0,019	0,008517241

Signal Boards	2030	6	15	Signal Boards_2030_15	1,04	0,661	3,47	4,142	0,008	0,161	0,161	568,299	0,059	0,026448276
Signal Boards	2030	26	50	Signal Boards_2030_50	3,631	0,393	4,099	3,193	0,007	0,04	0,04	568,299	0,035	0,015689655
Signal Boards	2030	51	120	Signal Boards_2030_120	4,366	0,213	3,451	1,657	0,006	0,035	0,035	568,3	0,019	0,008517241
Signal Boards	2030	121	175	Signal Boards_2030_175	6,201	0,157	3,048	0,586	0,006	0,024	0,024	568,299	0,014	0,006275862
Signal Boards	2030	176	250	Signal Boards_2030_250	9,484	0,176	1,255	0,594	0,007	0,019	0,019	686,695	0,015	0,006724138
Signal Boards	2035	6	15	Signal Boards_2035_15	1,04	0,661	3,469	4,142	0,008	0,161	0,161	568,299	0,059	0,026448276
Signal Boards	2035	26	50	Signal Boards_2035_50	3,294	0,356	4,067	3,082	0,007	0,02	0,02	568,299	0,032	0,014344828
Signal Boards	2035	51	120	Signal Boards_2035_120	3,929	0,192	3,445	1,482	0,006	0,018	0,018	568,299	0,017	0,00762069
Signal Boards	2035	121	175	Signal Boards_2035_175	5,439	0,138	3,048	0,372	0,006	0,014	0,014	568,299	0,012	0,00537931
Signal Boards	2035	176	250	Signal Boards_2035_250	8,75	0,162	1,254	0,401	0,007	0,014	0,014	686,695	0,014	0,006275862
Signal Boards	2040	6	15	Signal Boards_2040_15	1,04	0,661	3,469	4,142	0,008	0,161	0,161	568,299	0,059	0,026448276
Signal Boards	2040	26	50	Signal Boards_2040_50	3,289	0,356	4,074	3,037	0,007	0,014	0,014	568,299	0,032	0,014344828
Signal Boards	2040	51	120	Signal Boards_2040_120	3,848	0,188	3,447	1,428	0,006	0,013	0,013	568,299	0,016	0,007172414
Signal Boards	2040	121	175	Signal Boards_2040_175	5,177	0,131	3,05	0,296	0,006	0,011	0,011	568,299	0,011	0,004931034
Signal Boards	2040	176	250	Signal Boards_2040_250	8,473	0,157	1,255	0,341	0,007	0,012	0,012	686,695	0,014	0,006275862
Skid Steer Loaders	1990	16	25	Skid Steer Loaders_1990_25	4,928	2,213	4,999	6,919	0,855	0,741	0,741	568,299	0,199	0,089206897
Skid Steer Loaders	1990	26	50	Skid Steer Loaders_1990_50	18,4	4,466	9,113	7,821	0,871	1,202	1,202	568,299	0,403	0,180655172
Skid Steer Loaders	1990	51	120	Skid Steer Loaders_1990_120	15,551	2,252	5,536	14,506	0,791	1,262	1,262	568,299	0,203	0,091
Skid Steer Loaders	2000	16	25	Skid Steer Loaders_2000_25	4,659	2,092	4,777	6,403	0,065	0,568	0,568	568,299	0,188	0,084275862
Skid Steer Loaders	2000	26	50	Skid Steer Loaders_2000_50	15,338	3,723	7,849	6,733	0,066	0,816	0,816	568,299	0,335	0,150172414
Skid Steer Loaders	2000	51	120	Skid Steer Loaders_2000_120	10,902	1,579	4,162	9,028	0,06	0,779	0,779	568,299	0,142	0,063655172
Skid Steer Loaders	2005	16	25	Skid Steer Loaders_2005_25	3,352	1,505	3,709	5,913	0,065	0,461	0,461	568,299	0,135	0,060517241
Skid Steer Loaders	2005	26	50	Skid Steer Loaders_2005_50	12,458	3,024	6,864	6,068	0,066	0,716	0,716	568,3	0,272	0,121931034
Skid Steer Loaders	2005	51	120	Skid Steer Loaders_2005_120	9,248	1,339	3,988	7,653	0,06	0,712	0,712	568,299	0,12	0,053793103
Skid Steer Loaders	2010	16	25	Skid Steer Loaders_2010_25	1,189544	1	4,48486	5,29745	0,005	0,435	0,401	586,3356	0,171	0,076655172
Skid Steer Loaders	2010	26	50	Skid Steer Loaders_2010_50	1,189544	1	4,48486	5,29745	0,005	0,435	0,401	586,3356	0,171	0,076655172
Skid Steer Loaders	2010	51	120	Skid Steer Loaders_2010_120	0,504832	0,424	3,40768	5,19396	0,005	0,344	0,317	525,6915	0,153	0,068586207
Skid Steer Loaders	2011	16	25	Skid Steer Loaders_2011_25	1,055747	0,887	4,32754	5,2163	0,005	0,402	0,37	584,7285	0,171	0,076655172
Skid Steer Loaders	2011	26	50	Skid Steer Loaders_2011_50	1,055747	0,887	4,32754	5,2163	0,005	0,402	0,37	584,7285	0,171	0,076655172
Skid Steer Loaders	2011	51	120	Skid Steer Loaders_2011_120	0,460213	0,387	3,38539	4,88341	0,005	0,316	0,291	524,0915	0,153	0,068586207
Skid Steer Loaders	2012	16	25	Skid Steer Loaders_2012_25	1,031332	0,867	4,33156	5,12974	0,005	0,388	0,357	583,1258	0,171	0,076655172
Skid Steer Loaders	2012	26	50	Skid Steer Loaders_2012_50	1,031332	0,867	4,33156	5,12974	0,005	0,388	0,357	583,1258	0,171	0,076655172
Skid Steer Loaders	2012	51	120	Skid Steer Loaders_2012_120	0,443294	0,372	3,38462	4,73478	0,005	0,303	0,279	522,5357	0,153	0,068586207
Skid Steer Loaders	2013	16	25	Skid Steer Loaders_2013_25	0,908612	0,763	4,17576	4,84472	0,005	0,337	0,31	580,0144	0,171	0,076655172
Skid Steer Loaders	2013	26	50	Skid Steer Loaders_2013_50	0,908612	0,763	4,17576	4,84472	0,005	0,337	0,31	580,0144	0,171	0,076655172
Skid Steer Loaders	2013	51	120	Skid Steer Loaders_2013_120	0,404938	0,34	3,36337	4,44237	0,005	0,271	0,249	519,6388	0,153	0,068586207
Skid Steer Loaders	2014	16	25	Skid Steer Loaders_2014_25	0,790746	0,664	4,01585	4,54075	0,005	0,286	0,263	577,0757	0,171	0,076655172
Skid Steer Loaders	2014	26	50	Skid Steer Loaders_2014_50	0,790746	0,664	4,01585	4,54075	0,005	0,286	0,263	577,0757	0,171	0,076655172
Skid Steer Loaders	2014	51	120	Skid Steer Loaders_2014_120	0,361873	0,304	3,33829	4,0133	0,005	0,235	0,216	517,0621	0,153	0,068586207
Skid Steer Loaders	2015	16	25	Skid Steer Loaders_2015_25	0,760751	0,639	4,00436	4,43612	0,005	0,267	0,246	571,4195	0,171	0,076655172
Skid Steer Loaders	2015	26	50	Skid Steer Loaders_2015_50	0,760751	0,639	4,00436	4,43612	0,005	0,267	0,246	571,4195	0,171	0,076655172
Skid Steer Loaders	2015	51	120	Skid Steer Loaders_2015_120	0,349713	0,294	3,33751	3,8106	0,005	0,22	0,203	511,595	0,153	0,068586207
Skid Steer Loaders	2016	16	25	Skid Steer Loaders_2016_25	0,713135	0,599	3,95661	4,26784	0,005	0,241	0,221	565,2281	0,17	0,076206897
Skid Steer Loaders	2016	26	50	Skid Steer Loaders_2016_50	0,713135	0,599	3,95661	4,26784	0,005	0,241	0,221	565,2281	0,17	0,076206897
Skid Steer Loaders	2016	51	120	Skid Steer Loaders_2016_120	0,325064	0,273	3,32767	3,53439	0,005	0,197	0,182	506,2971	0,153	0,068586207
Skid Steer Loaders	2017	16	25	Skid Steer Loaders_2017_25	0,676461	0,568	3,91907	4,11272	0,005	0,217	0,2	556,7144	0,171	0,076655172
Skid Steer Loaders	2017	26	50	Skid Steer Loaders_2017_50	0,676461	0,568	3,91907	4,11272	0,005	0,217	0,2	556,7144	0,171	0,076655172
Skid Steer Loaders	2017	51	120	Skid Steer Loaders_2017_120	0,303772	0,255	3,31863	3,28618	0,005	0,177	0,162	498,3256	0,153	0,068586207
Skid Steer Loaders	2018	16	25	Skid Steer Loaders_2018_25	0,579635	0,487	3,78725	3,88962	0,005	0,178	0,164	547,5575	0,17	0,076206897
Skid Steer Loaders	2018	26	50	Skid Steer Loaders_2018_50	0,579635	0,487	3,78725	3,88962	0,005	0,178	0,164	547,5575	0,17	0,076206897
Skid Steer Loaders	2018	51	120	Skid Steer Loaders_2018_120	0,256853	0,216	3,28204	2,86	0,005	0,14	0,129	490,0935	0,153	0,068586207
Skid Steer Loaders	2019	16	25	Skid Steer Loaders_2019_25	0,531282	0,446	3,73957	3,75009	0,005	0,154	0,141	539,2667	0,171	0,076655172
Skid Steer Loaders	2019	26	50	Skid Steer Loaders_2019_50	0,531282	0,446	3,73957	3,75009	0,005	0,154	0,141	539,2667	0,171	0,076655172
Skid Steer Loaders	2019	51	120	Skid Steer Loaders_2019_120	0,2373	0,199	3,27736	2,65586	0,005	0,122	0,112	482,3844	0,153	0,068586207
Skid Steer Loaders	2020	16	25	Skid Steer Loaders_2020_25	0,522771	0,439	3,76397	3,69113	0,005	0,145	0,133	527,7577	0,171	0,076655172
Skid Steer Loaders	2020	26	50	Skid Steer Loaders_2020_50	0,522771	0,439	3,76397	3,69113	0,005	0,145	0,133	527,7577	0,171	0,076655172
Skid Steer Loaders	2020	51	120	Skid Steer Loaders_2020_120	0,224183	0,188	3,2771	2,5046	0,005	0,108	0,1	471,9075	0,153	0,068586207
Skid Steer Loaders	2021	16	25	Skid Steer Loaders_2021_25	0,486515	0,409	3,73158	3,57304	0,005	0,126	0,116	527,4501	0,171	0,076655172
Skid Steer Loaders	2021	26	50	Skid Steer Loaders_2021_50	0,486515	0,409	3,73158	3,57304	0,005	0,126	0,116	527,4501	0,171	0,076655172
Skid Steer Loaders	2021	51	120	Skid Steer Loaders_2021_120	0,211817	0,178	3,27687	2,36588	0,005	0,096	0,089	471,9774	0,153	0,068586207
Skid Steer Loaders	2022	16	25	Skid Steer Loaders_2022_25	0,434318	0,365	3,65597	3,43256	0,005	0,103	0,095	527,2726	0,171	0,076655172
Skid Steer Loaders	2022	26	50	Skid Steer Loaders_2022_50	0,434318	0,365	3,65597	3,43256	0,005	0,103	0,095	527,2726	0,171	0,076655172
Skid Steer Loaders	2022	51	120	Skid Steer Loaders_2022_120	0,195311	0,164	3,27037	2,18922	0,005	0,081	0,075	472,4321	0,153	0,068586207
Skid Steer Loaders	2023	16	25	Skid Steer Loaders_2023_25	0,420524	0,353	3,65358	3,37057	0,005	0,093	0,086	527,4231	0,171	0,076655172
Skid Steer Loaders	2023	26	50	Skid Steer Loaders_2023_50	0,420524	0,353	3,65358	3,37057	0,005	0,093	0,086	527,4231	0,171	0,076655172
Skid Steer Loaders	2023	51	120	Skid Steer Loaders_2023_120	0,182613	0,153	3,26613	2,03854	0,005	0,069	0,063	472,656	0,153	0,068586207
Skid Steer Loaders	2024	16	25	Skid Steer Loaders_2024_25	0,415881	0,349	3,67076	3,34552	0,005	0,089	0,082	527,8005	0,171	0,076655172
Skid Steer Loaders	2024	26	50	Skid Steer Loaders_2024_50	0,415881	0,349	3,67076	3,34552	0,005	0,089	0,082	527,8005	0,171	0,076655172
Skid Steer Loaders	2024	51	120	Skid Steer Loaders_2024_120	0,174841	0,147	3,26403	1,94841	0,005	0,063	0,058	472,847	0,153	0,068586207
Skid Steer Loaders	2025	16	25	Skid Steer Loaders_2025_25	0,406183	0,341	3,6601	3,30934	0,005	0,084	0,077	527,8608	0,171	0,076655172
Skid Steer Loaders	2025	26	50	Skid Steer Loaders_2025_50	0,406183	0,341	3,6601	3,30934	0,005	0,084	0,077	527,8608	0,171	0,076655172
Skid Steer Loaders	2025	51	120	Skid Steer Loaders_2025_120	0,166357	0,14	3,25156	1,86736	0,005	0,057	0,052	472,6295	0,153	0,068586207
Skid Steer Loaders	2030	16	25	Skid Steer Loaders_2030_25	1,526	0,685	2,34	4,332	0,007	0,162	0,162	568,299	0,061	0,027344828

Skid Steer Loaders	2030	26	50	Skid Steer Loaders_2030_50	1,694	0,411	4,386	3,128	0,007	0,018	0,018	568,299	0,037	0,016586207
Skid Steer Loaders	2030	51	120	Skid Steer Loaders_2030_120	1,478	0,214	3,538	1,477	0,006	0,017	0,017	568,299	0,019	0,008517241
Skid Steer Loaders	2035	16	25	Skid Steer Loaders_2035_25	1,526	0,685	2,339	4,332	0,007	0,161	0,161	568,299	0,061	0,027344828
Skid Steer Loaders	2035	26	50	Skid Steer Loaders_2035_50	1,694	0,411	4,39	3,097	0,007	0,015	0,015	568,299	0,037	0,016586207
Skid Steer Loaders	2035	51	120	Skid Steer Loaders_2035_120	1,459	0,211	3,54	1,442	0,006	0,014	0,014	568,299	0,019	0,008517241
Skid Steer Loaders	2040	16	25	Skid Steer Loaders_2040_25	1,526	0,685	2,339	4,332	0,007	0,161	0,161	568,299	0,061	0,027344828
Skid Steer Loaders	2040	26	50	Skid Steer Loaders_2040_50	1,696	0,411	4,392	3,093	0,007	0,014	0,014	568,299	0,037	0,016586207
Skid Steer Loaders	2040	51	120	Skid Steer Loaders_2040_120	1,456	0,211	3,54	1,435	0,006	0,013	0,013	568,3	0,019	0,008517241
Surfacing Equipment	1990	26	50	Surfacing Equipment_1990_50	8,011	4,203	8,629	7,726	0,871	1,147	1,147	568,299	0,379	0,169896552
Surfacing Equipment	1990	51	120	Surfacing Equipment_1990_120	18,985	2,203	5,473	14,403	0,791	1,214	1,214	568,299	0,198	0,088758621
Surfacing Equipment	1990	121	175	Surfacing Equipment_1990_175	19,781	1,707	4,883	13,91	0,758	0,927	0,927	568,3	0,154	0,069034483
Surfacing Equipment	1990	176	250	Surfacing Equipment_1990_250	31,103	1,707	4,883	13,91	0,758	0,927	0,927	568,299	0,154	0,069034483
Surfacing Equipment	1990	251	500	Surfacing Equipment_1990_500	45,625	1,526	9,66	13,316	0,662	0,805	0,805	568,299	0,137	0,061413793
Surfacing Equipment	1990	501	750	Surfacing Equipment_1990_750	71,58	1,526	9,66	13,316	1,018	0,82	0,82	568,299	0,137	0,061413793
Surfacing Equipment	2000	26	50	Surfacing Equipment_2000_50	6,689	3,509	7,426	6,755	0,066	0,779	0,779	568,299	0,316	0,141655172
Surfacing Equipment	2000	51	120	Surfacing Equipment_2000_120	14,399	1,671	4,385	9,991	0,06	0,768	0,768	568,299	0,15	0,067241379
Surfacing Equipment	2000	121	175	Surfacing Equipment_2000_175	13,132	1,133	3,583	9,132	0,057	0,458	0,458	568,299	0,102	0,045724138
Surfacing Equipment	2000	176	250	Surfacing Equipment_2000_250	17,689	0,97	2,937	8,84	0,057	0,385	0,385	568,299	0,087	0,039
Surfacing Equipment	2000	251	500	Surfacing Equipment_2000_500	26,875	0,899	4,584	8,551	0,05	0,347	0,347	568,299	0,081	0,036310345
Surfacing Equipment	2000	501	750	Surfacing Equipment_2000_750	42,164	0,899	4,584	8,551	0,052	0,347	0,347	568,299	0,081	0,036310345
Surfacing Equipment	2005	26	50	Surfacing Equipment_2005_50	6,001	3,148	6,936	6,318	0,066	0,727	0,727	568,3	0,284	0,127310345
Surfacing Equipment	2005	51	120	Surfacing Equipment_2005_120	12,568	1,458	4,122	8,636	0,06	0,718	0,718	568,299	0,131	0,058724138
Surfacing Equipment	2005	121	175	Surfacing Equipment_2005_175	11,032	0,952	3,316	7,874	0,057	0,402	0,402	568,3	0,085	0,038103448
Surfacing Equipment	2005	176	250	Surfacing Equipment_2005_250	13,31	0,73	2,16	7,529	0,057	0,29	0,29	568,299	0,065	0,029137931
Surfacing Equipment	2005	251	500	Surfacing Equipment_2005_500	19,448	0,65	3,023	6,988	0,05	0,26	0,26	568,299	0,058	0,026
Surfacing Equipment	2005	501	750	Surfacing Equipment_2005_750	31,164	0,664	3,019	7,132	0,052	0,262	0,262	568,299	0,059	0,026448276
Surfacing Equipment	2010	26	50	Surfacing Equipment_2010_50	1,528976	1,285	4,99949	5,66618	0,005	0,479	0,44	593,0498	0,173	0,077551724
Surfacing Equipment	2010	51	120	Surfacing Equipment_2010_120	0,730908	0,614	3,59404	6,16537	0,005	0,437	0,402	524,0289	0,153	0,068586207
Surfacing Equipment	2010	121	175	Surfacing Equipment_2010_175	0,662829	0,557	3,09066	6,60554	0,005	0,318	0,292	522,4909	0,152	0,068137931
Surfacing Equipment	2010	176	250	Surfacing Equipment_2010_250	0,488779	0,411	1,7501	6,37687	0,005	0,212	0,195	530,3611	0,154	0,069034483
Surfacing Equipment	2010	251	500	Surfacing Equipment_2010_500	0,29849	0,251	1,5491	4,43284	0,005	0,144	0,133	522,9659	0,152	0,068137931
Surfacing Equipment	2010	501	750	Surfacing Equipment_2010_750	0,208991	0,176	1,09654	3,5514	0,005	0,112	0,103	524,8847	0,153	0,068586207
Surfacing Equipment	2011	26	50	Surfacing Equipment_2011_50	1,476255	1,24	4,95391	5,62022	0,005	0,467	0,43	590,2612	0,172	0,077103448
Surfacing Equipment	2011	51	120	Surfacing Equipment_2011_120	0,710662	0,597	3,58797	5,98734	0,005	0,427	0,393	522,8446	0,153	0,068586207
Surfacing Equipment	2011	121	175	Surfacing Equipment_2011_175	0,6472	0,544	3,07389	6,46356	0,005	0,312	0,287	521,1883	0,152	0,068137931
Surfacing Equipment	2011	176	250	Surfacing Equipment_2011_250	0,481299	0,404	1,72048	6,2863	0,005	0,207	0,191	529,0217	0,154	0,069034483
Surfacing Equipment	2011	251	500	Surfacing Equipment_2011_500	0,289572	0,243	1,48634	4,26701	0,005	0,136	0,125	520,4212	0,152	0,068137931
Surfacing Equipment	2011	501	750	Surfacing Equipment_2011_750	0,214952	0,181	1,10325	3,56055	0,005	0,113	0,104	523,5482	0,153	0,068586207
Surfacing Equipment	2012	26	50	Surfacing Equipment_2012_50	1,500607	1,261	5,03037	5,63914	0,005	0,473	0,435	588,7118	0,172	0,077103448
Surfacing Equipment	2012	51	120	Surfacing Equipment_2012_120	0,709653	0,596	3,59999	5,94999	0,005	0,426	0,392	521,4233	0,153	0,068586207
Surfacing Equipment	2012	121	175	Surfacing Equipment_2012_175	0,653605	0,549	3,0893	6,48747	0,005	0,315	0,29	519,886	0,152	0,068137931
Surfacing Equipment	2012	176	250	Surfacing Equipment_2012_250	0,481696	0,405	1,72816	6,22653	0,005	0,207	0,191	527,6815	0,154	0,069034483
Surfacing Equipment	2012	251	500	Surfacing Equipment_2012_500	0,290035	0,244	1,49574	4,20283	0,005	0,134	0,124	519,0487	0,152	0,068137931
Surfacing Equipment	2012	501	750	Surfacing Equipment_2012_750	0,210249	0,177	1,04051	3,45723	0,005	0,109	0,1	521,0672	0,152	0,068137931
Surfacing Equipment	2013	26	50	Surfacing Equipment_2013_50	1,455428	1,223	4,99596	5,53803	0,005	0,457	0,421	585,7193	0,172	0,077103448
Surfacing Equipment	2013	51	120	Surfacing Equipment_2013_120	0,69949	0,588	3,60266	5,8163	0,005	0,415	0,382	518,7481	0,153	0,068586207
Surfacing Equipment	2013	121	175	Surfacing Equipment_2013_175	0,588968	0,495	3,00889	5,94134	0,005	0,286	0,263	518,4738	0,152	0,068137931
Surfacing Equipment	2013	176	250	Surfacing Equipment_2013_250	0,441295	0,371	1,62196	5,8812	0,005	0,187	0,172	524,5301	0,154	0,069034483
Surfacing Equipment	2013	251	500	Surfacing Equipment_2013_500	0,288988	0,243	1,50462	4,09243	0,005	0,131	0,121	516,1488	0,152	0,068137931
Surfacing Equipment	2013	501	750	Surfacing Equipment_2013_750	0,215353	0,181	1,04387	3,46124	0,005	0,11	0,101	518,3853	0,152	0,068137931
Surfacing Equipment	2014	26	50	Surfacing Equipment_2014_50	1,358041	1,141	4,87668	5,42525	0,005	0,434	0,399	582,7249	0,172	0,077103448
Surfacing Equipment	2014	51	120	Surfacing Equipment_2014_120	0,665267	0,559	3,58043	5,52029	0,005	0,391	0,36	516,3377	0,153	0,068586207
Surfacing Equipment	2014	121	175	Surfacing Equipment_2014_175	0,561853	0,472	3,01212	5,71146	0,005	0,273	0,251	515,8203	0,152	0,068137931
Surfacing Equipment	2014	176	250	Surfacing Equipment_2014_250	0,364211	0,306	1,43363	5,10182	0,005	0,149	0,137	521,4518	0,154	0,069034483
Surfacing Equipment	2014	251	500	Surfacing Equipment_2014_500	0,2821	0,237	1,50147	3,8952	0,005	0,125	0,115	513,6157	0,152	0,068137931
Surfacing Equipment	2014	501	750	Surfacing Equipment_2014_750	0,206755	0,174	1,02007	3,28435	0,005	0,103	0,095	516,3212	0,153	0,068586207
Surfacing Equipment	2015	26	50	Surfacing Equipment_2015_50	1,223408	1,028	4,69178	5,25471	0,005	0,402	0,37	576,7706	0,172	0,077103448
Surfacing Equipment	2015	51	120	Surfacing Equipment_2015_120	0,651534	0,547	3,57496	5,37414	0,005	0,378	0,348	510,1417	0,152	0,068137931
Surfacing Equipment	2015	121	175	Surfacing Equipment_2015_175	0,568	0,477	3,02727	5,73307	0,005	0,276	0,254	510,5481	0,152	0,068137931
Surfacing Equipment	2015	176	250	Surfacing Equipment_2015_250	0,36864	0,31	1,44156	5,11205	0,005	0,151	0,139	516,058	0,154	0,069034483
Surfacing Equipment	2015	251	500	Surfacing Equipment_2015_500	0,286581	0,241	1,51303	3,90037	0,005	0,126	0,116	508,3985	0,152	0,068137931
Surfacing Equipment	2015	501	750	Surfacing Equipment_2015_750	0,211433	0,178	1,02353	3,28678	0,005	0,104	0,096	511,1157	0,153	0,068586207
Surfacing Equipment	2016	26	50	Surfacing Equipment_2016_50	1,243319	1,045	4,7626	5,27275	0,005	0,406	0,374	570,8145	0,172	0,077103448
Surfacing Equipment	2016	51	120	Surfacing Equipment_2016_120	0,621267	0,522	3,54977	5,05142	0,005	0,349	0,321	505,0873	0,152	0,068137931
Surfacing Equipment	2016	121	175	Surfacing Equipment_2016_175	0,544572	0,458	3,00649	5,45794	0,005	0,265	0,244	504,5576	0,152	0,068137931
Surfacing Equipment	2016	176	250	Surfacing Equipment_2016_250	0,365495	0,307	1,42946	5,04791	0,005	0,148	0,136	510,7058	0,154	0,069034483
Surfacing Equipment	2016	251	500	Surfacing Equipment_2016_500	0,258417	0,217	1,42484	3,46816	0,005	0,111	0,102	502,4709	0,152	0,068137931
Surfacing Equipment	2016	501	750	Surfacing Equipment_2016_750	0,192579	0,162	0,99966	2,87955	0,005	0,093	0,085	506,967	0,153	0,068586207
Surfacing Equipment	2017	26	50	Surfacing Equipment_2017_50	1,10469	0,928	4,60324	5,0643	0,006	0,365	0,336	564,4772	0,173	0,077551724
Surfacing Equipment	2017	51	120	Surfacing Equipment_2017_120	0,604716	0,508	3,55587	4,94212	0,005	0,337	0,31	498,36	0,153	0,068586207
Surfacing Equipment	2017	121	175	Surfacing Equipment_2017_175	0,541755	0,455	3,00273	5,39296	0,005	0,264	0,243	496,2741	0,152	0,068137931
Surfacing Equipment	2017	176	250	Surfacing Equipment_2017_250	0,325463	0,273	1,3431	4,46793	0,005	0,129	0,119	501,8465	0,154	0,069034483
Surfacing Equipment	2017	251	500	Surfacing Equipment_2017_500	0,242435	0,204	1,3962	3,10636	0,005	0,103	0,094	496,885	0,152	0,068137931

Surfacing Equipment	2017	501	750	Surfacing Equipment_2017_750	0,190932	0,16	1,00272	2,76955	0,005	0,09	0,083	499,7117	0,153	0,068586207
Surfacing Equipment	2018	26	50	Surfacing Equipment_2018_50	0,927049	0,779	4,35302	4,81982	0,006	0,32	0,294	555,7363	0,173	0,077551724
Surfacing Equipment	2018	51	120	Surfacing Equipment_2018_120	0,49279	0,414	3,48871	4,28388	0,005	0,268	0,247	491,3172	0,153	0,068586207
Surfacing Equipment	2018	121	175	Surfacing Equipment_2018_175	0,44632	0,375	2,97609	4,47527	0,005	0,215	0,198	488,4406	0,152	0,068137931
Surfacing Equipment	2018	176	250	Surfacing Equipment_2018_250	0,286758	0,241	1,234	3,98866	0,005	0,113	0,104	494,1388	0,154	0,069034483
Surfacing Equipment	2018	251	500	Surfacing Equipment_2018_500	0,187325	0,157	1,22557	2,20389	0,005	0,076	0,07	487,8722	0,152	0,068137931
Surfacing Equipment	2018	501	750	Surfacing Equipment_2018_750	0,169556	0,142	0,99347	2,26863	0,005	0,078	0,072	488,86	0,152	0,068137931
Surfacing Equipment	2019	26	50	Surfacing Equipment_2019_50	0,765383	0,643	4,0998	4,41999	0,006	0,25	0,23	547,0462	0,173	0,077551724
Surfacing Equipment	2019	51	120	Surfacing Equipment_2019_120	0,42278	0,355	3,44856	3,82306	0,005	0,226	0,208	484,0757	0,153	0,068586207
Surfacing Equipment	2019	121	175	Surfacing Equipment_2019_175	0,425034	0,357	2,97177	4,23866	0,005	0,204	0,187	479,6717	0,152	0,068137931
Surfacing Equipment	2019	176	250	Surfacing Equipment_2019_250	0,257694	0,217	1,21576	3,39993	0,005	0,101	0,093	486,8417	0,154	0,069034483
Surfacing Equipment	2019	251	500	Surfacing Equipment_2019_500	0,173135	0,145	1,2143	1,89944	0,005	0,068	0,063	481,8965	0,152	0,068137931
Surfacing Equipment	2019	501	750	Surfacing Equipment_2019_750	0,168821	0,142	0,99372	2,17879	0,005	0,076	0,07	480,166	0,152	0,068137931
Surfacing Equipment	2020	26	50	Surfacing Equipment_2020_50	0,637406	0,536	3,93357	4,23906	0,006	0,216	0,199	535,5275	0,173	0,077551724
Surfacing Equipment	2020	51	120	Surfacing Equipment_2020_120	0,392345	0,33	3,43932	3,61216	0,005	0,206	0,19	473,8188	0,153	0,068586207
Surfacing Equipment	2020	121	175	Surfacing Equipment_2020_175	0,365927	0,307	2,93068	3,67232	0,005	0,175	0,161	469,2079	0,152	0,068137931
Surfacing Equipment	2020	176	250	Surfacing Equipment_2020_250	0,252128	0,212	1,21774	3,22243	0,005	0,097	0,089	476,4261	0,154	0,069034483
Surfacing Equipment	2020	251	500	Surfacing Equipment_2020_500	0,173203	0,146	1,21902	1,83755	0,005	0,067	0,062	471,6331	0,153	0,068586207
Surfacing Equipment	2020	501	750	Surfacing Equipment_2020_750	0,168871	0,142	0,99569	2,09374	0,005	0,074	0,068	469,6252	0,152	0,068137931
Surfacing Equipment	2021	26	50	Surfacing Equipment_2021_50	0,60314	0,507	3,93231	4,18875	0,006	0,204	0,188	535,784	0,173	0,077551724
Surfacing Equipment	2021	51	120	Surfacing Equipment_2021_120	0,370907	0,312	3,43619	3,46112	0,005	0,191	0,175	474,0906	0,153	0,068586207
Surfacing Equipment	2021	121	175	Surfacing Equipment_2021_175	0,307112	0,258	2,91895	3,09858	0,005	0,145	0,134	469,1687	0,152	0,068137931
Surfacing Equipment	2021	176	250	Surfacing Equipment_2021_250	0,245986	0,207	1,21854	2,99364	0,005	0,092	0,085	476,8023	0,154	0,069034483
Surfacing Equipment	2021	251	500	Surfacing Equipment_2021_500	0,167588	0,141	1,20226	1,75282	0,005	0,064	0,058	471,7484	0,153	0,068586207
Surfacing Equipment	2021	501	750	Surfacing Equipment_2021_750	0,148862	0,125	0,99181	1,59712	0,005	0,062	0,057	470,4087	0,152	0,068137931
Surfacing Equipment	2022	26	50	Surfacing Equipment_2022_50	0,509163	0,428	3,77243	3,9114	0,006	0,154	0,142	535,8364	0,173	0,077551724
Surfacing Equipment	2022	51	120	Surfacing Equipment_2022_120	0,34882	0,293	3,40936	3,24974	0,005	0,175	0,161	473,6362	0,153	0,068586207
Surfacing Equipment	2022	121	175	Surfacing Equipment_2022_175	0,283918	0,239	2,90957	2,70137	0,005	0,13	0,12	469,1259	0,152	0,068137931
Surfacing Equipment	2022	176	250	Surfacing Equipment_2022_250	0,233135	0,196	1,21737	2,66709	0,005	0,085	0,078	476,9511	0,154	0,069034483
Surfacing Equipment	2022	251	500	Surfacing Equipment_2022_500	0,157417	0,132	1,16047	1,5573	0,005	0,057	0,053	470,5248	0,152	0,068137931
Surfacing Equipment	2022	501	750	Surfacing Equipment_2022_750	0,136805	0,115	0,98819	1,35503	0,005	0,052	0,048	470,4004	0,152	0,068137931
Surfacing Equipment	2023	26	50	Surfacing Equipment_2023_50	0,51987	0,437	3,83184	3,92432	0,006	0,155	0,143	535,9295	0,173	0,077551724
Surfacing Equipment	2023	51	120	Surfacing Equipment_2023_120	0,321277	0,27	3,39556	3,05811	0,005	0,157	0,144	474,4698	0,153	0,068586207
Surfacing Equipment	2023	121	175	Surfacing Equipment_2023_175	0,267066	0,224	2,91383	2,45516	0,005	0,119	0,11	470,0141	0,152	0,068137931
Surfacing Equipment	2023	176	250	Surfacing Equipment_2023_250	0,22795	0,192	1,21946	2,50162	0,005	0,082	0,075	476,9606	0,154	0,069034483
Surfacing Equipment	2023	251	500	Surfacing Equipment_2023_500	0,156473	0,131	1,16329	1,47556	0,005	0,056	0,051	470,3746	0,152	0,068137931
Surfacing Equipment	2023	501	750	Surfacing Equipment_2023_750	0,119512	0,1	0,98543	1,08063	0,005	0,04	0,037	472,4466	0,153	0,068586207
Surfacing Equipment	2024	26	50	Surfacing Equipment_2024_50	0,396453	0,333	3,66193	3,72069	0,006	0,116	0,107	536,0304	0,173	0,077551724
Surfacing Equipment	2024	51	120	Surfacing Equipment_2024_120	0,29879	0,251	3,3893	2,8828	0,005	0,142	0,131	475,3806	0,154	0,069034483
Surfacing Equipment	2024	121	175	Surfacing Equipment_2024_175	0,271298	0,228	2,92962	2,46372	0,005	0,12	0,111	470,0767	0,152	0,068137931
Surfacing Equipment	2024	176	250	Surfacing Equipment_2024_250	0,209166	0,176	1,18272	2,23638	0,005	0,071	0,065	477,096	0,154	0,069034483
Surfacing Equipment	2024	251	500	Surfacing Equipment_2024_500	0,159183	0,134	1,16767	1,47769	0,005	0,056	0,051	470,2521	0,152	0,068137931
Surfacing Equipment	2024	501	750	Surfacing Equipment_2024_750	0,112194	0,094	0,98493	0,94669	0,005	0,034	0,032	472,9833	0,153	0,068586207
Surfacing Equipment	2025	26	50	Surfacing Equipment_2025_50	0,279239	0,235	3,53733	3,57642	0,006	0,082	0,075	536,14	0,173	0,077551724
Surfacing Equipment	2025	51	120	Surfacing Equipment_2025_120	0,276433	0,232	3,38535	2,6591	0,005	0,124	0,114	476,7656	0,154	0,069034483
Surfacing Equipment	2025	121	175	Surfacing Equipment_2025_175	0,222452	0,187	2,92602	1,9987	0,005	0,094	0,087	471,0403	0,152	0,068137931
Surfacing Equipment	2025	176	250	Surfacing Equipment_2025_250	0,176026	0,148	1,14337	1,74736	0,005	0,055	0,051	477,11	0,154	0,069034483
Surfacing Equipment	2025	251	500	Surfacing Equipment_2025_500	0,152175	0,128	1,16861	1,3268	0,005	0,051	0,047	470,2827	0,152	0,068137931
Surfacing Equipment	2025	501	750	Surfacing Equipment_2025_750	0,101486	0,085	0,9776	0,76806	0,005	0,027	0,025	470,5508	0,152	0,068137931
Surfacing Equipment	2030	26	50	Surfacing Equipment_2030_50	0,988	0,518	4,295	3,4	0,007	0,075	0,075	568,299	0,046	0,02062069
Surfacing Equipment	2030	51	120	Surfacing Equipment_2030_120	2,281	0,264	3,492	1,959	0,006	0,068	0,068	568,299	0,023	0,010310345
Surfacing Equipment	2030	121	175	Surfacing Equipment_2030_175	2,286	0,197	3,071	0,939	0,006	0,043	0,043	568,299	0,017	0,00762069
Surfacing Equipment	2030	176	250	Surfacing Equipment_2030_250	3,134	0,172	1,064	0,789	0,006	0,026	0,026	568,299	0,015	0,006724138
Surfacing Equipment	2030	251	500	Surfacing Equipment_2030_500	5,062	0,169	1,032	0,738	0,005	0,025	0,025	568,299	0,015	0,006724138
Surfacing Equipment	2030	501	750	Surfacing Equipment_2030_750	7,953	0,169	1,032	0,749	0,005	0,025	0,025	568,299	0,015	0,006724138
Surfacing Equipment	2035	26	50	Surfacing Equipment_2035_50	0,836	0,439	4,221	3,193	0,007	0,041	0,041	568,299	0,039	0,017482759
Surfacing Equipment	2035	51	120	Surfacing Equipment_2035_120	1,954	0,226	3,482	1,659	0,006	0,038	0,038	568,299	0,02	0,008965517
Surfacing Equipment	2035	121	175	Surfacing Equipment_2035_175	1,887	0,162	3,072	0,567	0,006	0,025	0,025	568,299	0,014	0,006275862
Surfacing Equipment	2035	176	250	Surfacing Equipment_2035_250	2,725	0,149	1,05	0,497	0,006	0,016	0,016	568,299	0,013	0,005827586
Surfacing Equipment	2035	251	500	Surfacing Equipment_2035_500	4,436	0,148	1,018	0,471	0,005	0,016	0,016	568,299	0,013	0,005827586
Surfacing Equipment	2035	501	750	Surfacing Equipment_2035_750	6,967	0,148	1,018	0,477	0,005	0,016	0,016	568,3	0,013	0,005827586
Surfacing Equipment	2040	26	50	Surfacing Equipment_2040_50	0,753	0,395	4,183	3,114	0,007	0,025	0,025	568,299	0,035	0,015689655
Surfacing Equipment	2040	51	120	Surfacing Equipment_2040_120	1,782	0,206	3,477	1,521	0,006	0,024	0,024	568,299	0,018	0,008068966
Surfacing Equipment	2040	121	175	Surfacing Equipment_2040_175	1,691	0,146	3,073	0,397	0,006	0,017	0,017	568,299	0,013	0,005827586
Surfacing Equipment	2040	176	250	Surfacing Equipment_2040_250	2,566	0,14	1,047	0,37	0,006	0,013	0,013	568,299	0,012	0,00537931
Surfacing Equipment	2040	251	500	Surfacing Equipment_2040_500	4,197	0,14	1,015	0,358	0,005	0,012	0,012	568,299	0,012	0,00537931
Surfacing Equipment	2040	501	750	Surfacing Equipment_2040_750	6,59	0,14	1,015	0,361	0,005	0,013	0,013	568,299	0,012	0,00537931
Sweepers/Scrubbers	1990	6	15	Sweepers/Scrubbers_1990_15	4,971	1,804	5	9,999	0,833	0,968	0,968	568,299	0,162	0,07262069
Sweepers/Scrubbers	1990	16	25	Sweepers/Scrubbers_1990_25	10,019	2,213	5	6,92	0,679	0,735	0,735	568,299	0,199	0,089206897
Sweepers/Scrubbers	1990	26	50	Sweepers/Scrubbers_1990_50	32,867	4,512	9,199	7,836	0,692	1,202	1,202	568,299	0,407	0,182448276
Sweepers/Scrubbers	1990	51	120	Sweepers/Scrubbers_1990_120	39,044	2,254	5,53	14,467	0,628	1,259	1,259	568,299	0,203	0,091
Sweepers/Scrubbers	1990	121	175	Sweepers/Scrubbers_1990_175	48,318	1,505	4,861	12,813	0,602	0,818	0,818	568,299	0,135	0,060517241
Sweepers/Scrubbers	1990	176	250	Sweepers/Scrubbers_1990_250	56,322	1,505	4,861	12,813	0,602	0,818	0,818	568,299	0,135	0,060517241

Sweepers/Scrubbers	2000	6	15	Sweepers/Scrubbers_2000_15	2,886	1,047	4,258	7,362	0,079	0,428	0,428	568,299	0,094	0,042137931
Sweepers/Scrubbers	2000	16	25	Sweepers/Scrubbers_2000_25	4,933	1,089	4,438	6,325	0,064	0,442	0,442	568,299	0,098	0,043931034
Sweepers/Scrubbers	2000	26	50	Sweepers/Scrubbers_2000_50	30,182	4,144	8,622	6,934	0,065	0,882	0,882	568,299	0,373	0,167206897
Sweepers/Scrubbers	2000	51	120	Sweepers/Scrubbers_2000_120	29,565	1,706	4,394	9,702	0,059	0,84	0,84	568,299	0,154	0,069034483
Sweepers/Scrubbers	2000	121	175	Sweepers/Scrubbers_2000_175	37,084	1,155	3,49	8,929	0,057	0,481	0,481	568,299	0,104	0,04662069
Sweepers/Scrubbers	2000	176	250	Sweepers/Scrubbers_2000_250	34,578	0,924	2,598	8,516	0,057	0,371	0,371	568,3	0,083	0,037206897
Sweepers/Scrubbers	2005	6	15	Sweepers/Scrubbers_2005_15	1,951	0,708	3,469	4,985	0,079	0,35	0,35	568,299	0,063	0,028241379
Sweepers/Scrubbers	2005	16	25	Sweepers/Scrubbers_2005_25	3,505	0,774	2,526	5,326	0,064	0,323	0,323	568,299	0,069	0,030931034
Sweepers/Scrubbers	2005	26	50	Sweepers/Scrubbers_2005_50	28,008	3,845	8,25	6,52	0,065	0,844	0,844	568,299	0,346	0,155103448
Sweepers/Scrubbers	2005	51	120	Sweepers/Scrubbers_2005_120	27,009	1,559	4,253	8,538	0,059	0,826	0,826	568,299	0,14	0,062758621
Sweepers/Scrubbers	2005	121	175	Sweepers/Scrubbers_2005_175	32,779	1,021	3,349	7,851	0,057	0,45	0,45	568,3	0,092	0,041241379
Sweepers/Scrubbers	2005	176	250	Sweepers/Scrubbers_2005_250	25,002	0,668	1,76	7,318	0,057	0,258	0,258	568,299	0,06	0,026896552
Sweepers/Scrubbers	2010	6	15	Sweepers/Scrubbers_2010_15	2,154395	1,81	6,34286	5,8263	0,005	0,615	0,566	583,6982	0,17	0,076206897
Sweepers/Scrubbers	2010	16	25	Sweepers/Scrubbers_2010_25	2,154395	1,81	6,34286	5,8263	0,005	0,615	0,566	583,6982	0,17	0,076206897
Sweepers/Scrubbers	2010	26	50	Sweepers/Scrubbers_2010_50	2,154395	1,81	6,34286	5,8263	0,005	0,615	0,566	583,6982	0,17	0,076206897
Sweepers/Scrubbers	2010	51	120	Sweepers/Scrubbers_2010_120	1,093749	0,919	4,10149	7,68967	0,005	0,657	0,604	526,7953	0,153	0,068586207
Sweepers/Scrubbers	2010	121	175	Sweepers/Scrubbers_2010_175	1,189152	0,999	4,21032	10,3895	0,005	0,578	0,532	525,6912	0,153	0,068586207
Sweepers/Scrubbers	2010	176	250	Sweepers/Scrubbers_2010_250	0,69332	0,583	2,35018	7,47446	0,005	0,319	0,294	522,3625	0,152	0,068137931
Sweepers/Scrubbers	2011	6	15	Sweepers/Scrubbers_2011_15	2,104606	1,768	6,34227	5,80317	0,005	0,606	0,557	582,239	0,17	0,076206897
Sweepers/Scrubbers	2011	16	25	Sweepers/Scrubbers_2011_25	2,104606	1,768	6,34227	5,80317	0,005	0,606	0,557	582,239	0,17	0,076206897
Sweepers/Scrubbers	2011	26	50	Sweepers/Scrubbers_2011_50	2,104606	1,768	6,34227	5,80317	0,005	0,606	0,557	582,239	0,17	0,076206897
Sweepers/Scrubbers	2011	51	120	Sweepers/Scrubbers_2011_120	1,070043	0,899	4,08877	7,49949	0,005	0,651	0,599	525,4783	0,153	0,068586207
Sweepers/Scrubbers	2011	121	175	Sweepers/Scrubbers_2011_175	1,134336	0,953	4,14616	9,92737	0,005	0,554	0,509	524,377	0,153	0,068586207
Sweepers/Scrubbers	2011	176	250	Sweepers/Scrubbers_2011_250	0,623199	0,524	2,16425	7,01091	0,005	0,284	0,261	521,0566	0,152	0,068137931
Sweepers/Scrubbers	2012	6	15	Sweepers/Scrubbers_2012_15	2,177617	1,83	6,54958	5,85015	0,005	0,621	0,571	580,7797	0,17	0,076206897
Sweepers/Scrubbers	2012	16	25	Sweepers/Scrubbers_2012_25	2,177617	1,83	6,54958	5,85015	0,005	0,621	0,571	580,7797	0,17	0,076206897
Sweepers/Scrubbers	2012	26	50	Sweepers/Scrubbers_2012_50	2,177617	1,83	6,54958	5,85015	0,005	0,621	0,571	580,7797	0,17	0,076206897
Sweepers/Scrubbers	2012	51	120	Sweepers/Scrubbers_2012_120	1,078889	0,907	4,12474	7,50259	0,005	0,659	0,606	524,1613	0,153	0,068586207
Sweepers/Scrubbers	2012	121	175	Sweepers/Scrubbers_2012_175	1,141423	0,959	4,16243	9,95689	0,005	0,558	0,513	523,0627	0,153	0,068586207
Sweepers/Scrubbers	2012	176	250	Sweepers/Scrubbers_2012_250	0,63315	0,532	2,17716	7,05573	0,005	0,286	0,264	519,7507	0,152	0,068137931
Sweepers/Scrubbers	2013	6	15	Sweepers/Scrubbers_2013_15	2,124198	1,785	6,54294	5,78778	0,005	0,608	0,559	577,8612	0,17	0,076206897
Sweepers/Scrubbers	2013	16	25	Sweepers/Scrubbers_2013_25	2,124198	1,785	6,54294	5,78778	0,005	0,608	0,559	577,8612	0,17	0,076206897
Sweepers/Scrubbers	2013	26	50	Sweepers/Scrubbers_2013_50	2,124198	1,785	6,54294	5,78778	0,005	0,608	0,559	577,8612	0,17	0,076206897
Sweepers/Scrubbers	2013	51	120	Sweepers/Scrubbers_2013_120	1,019559	0,857	4,07918	7,14773	0,005	0,626	0,576	521,5273	0,153	0,068586207
Sweepers/Scrubbers	2013	121	175	Sweepers/Scrubbers_2013_175	1,122038	0,943	4,12302	9,76352	0,005	0,547	0,503	520,4343	0,153	0,068586207
Sweepers/Scrubbers	2013	176	250	Sweepers/Scrubbers_2013_250	0,590836	0,496	2,05413	6,66337	0,005	0,263	0,242	517,1389	0,152	0,068137931
Sweepers/Scrubbers	2014	6	15	Sweepers/Scrubbers_2014_15	2,103399	1,767	6,59249	5,75157	0,005	0,603	0,555	574,9427	0,17	0,076206897
Sweepers/Scrubbers	2014	16	25	Sweepers/Scrubbers_2014_25	2,103399	1,767	6,59249	5,75157	0,005	0,603	0,555	574,9427	0,17	0,076206897
Sweepers/Scrubbers	2014	26	50	Sweepers/Scrubbers_2014_50	2,103399	1,767	6,59249	5,75157	0,005	0,603	0,555	574,9427	0,17	0,076206897
Sweepers/Scrubbers	2014	51	120	Sweepers/Scrubbers_2014_120	0,990916	0,833	4,07085	6,93387	0,005	0,61	0,562	518,8933	0,153	0,068586207
Sweepers/Scrubbers	2014	121	175	Sweepers/Scrubbers_2014_175	1,041854	0,875	4,04161	9,10792	0,005	0,503	0,463	517,8058	0,153	0,068586207
Sweepers/Scrubbers	2014	176	250	Sweepers/Scrubbers_2014_250	0,600544	0,505	2,06593	6,70399	0,005	0,265	0,244	514,5271	0,152	0,068137931
Sweepers/Scrubbers	2015	6	15	Sweepers/Scrubbers_2015_15	2,151059	1,807	6,75408	5,77191	0,005	0,611	0,562	569,1058	0,17	0,076206897
Sweepers/Scrubbers	2015	16	25	Sweepers/Scrubbers_2015_25	2,151059	1,807	6,75408	5,77191	0,005	0,611	0,562	569,1058	0,17	0,076206897
Sweepers/Scrubbers	2015	26	50	Sweepers/Scrubbers_2015_50	2,151059	1,807	6,75408	5,77191	0,005	0,611	0,562	569,1058	0,17	0,076206897
Sweepers/Scrubbers	2015	51	120	Sweepers/Scrubbers_2015_120	0,991855	0,833	4,09682	6,8863	0,005	0,61	0,561	513,6254	0,153	0,068586207
Sweepers/Scrubbers	2015	121	175	Sweepers/Scrubbers_2015_175	0,998266	0,839	3,98239	8,69682	0,005	0,479	0,441	512,5489	0,153	0,068586207
Sweepers/Scrubbers	2015	176	250	Sweepers/Scrubbers_2015_250	0,610252	0,513	2,07774	6,7446	0,005	0,268	0,246	509,3035	0,152	0,068137931
Sweepers/Scrubbers	2016	6	15	Sweepers/Scrubbers_2016_15	2,119969	1,781	6,78514	5,72609	0,005	0,603	0,555	563,2688	0,17	0,076206897
Sweepers/Scrubbers	2016	16	25	Sweepers/Scrubbers_2016_25	2,119969	1,781	6,78514	5,72609	0,005	0,603	0,555	563,2688	0,17	0,076206897
Sweepers/Scrubbers	2016	26	50	Sweepers/Scrubbers_2016_50	2,119969	1,781	6,78514	5,72609	0,005	0,603	0,555	563,2688	0,17	0,076206897
Sweepers/Scrubbers	2016	51	120	Sweepers/Scrubbers_2016_120	0,931404	0,783	4,05916	6,45405	0,005	0,571	0,525	508,3574	0,153	0,068586207
Sweepers/Scrubbers	2016	121	175	Sweepers/Scrubbers_2016_175	0,887319	0,746	3,83865	7,78746	0,005	0,419	0,385	507,292	0,153	0,068586207
Sweepers/Scrubbers	2016	176	250	Sweepers/Scrubbers_2016_250	0,61965	0,521	2,08905	6,78244	0,005	0,27	0,248	504,0799	0,152	0,068137931
Sweepers/Scrubbers	2017	6	15	Sweepers/Scrubbers_2017_15	2,037349	1,712	6,7185	5,62558	0,005	0,582	0,535	554,5133	0,17	0,076206897
Sweepers/Scrubbers	2017	16	25	Sweepers/Scrubbers_2017_25	2,037349	1,712	6,7185	5,62558	0,005	0,582	0,535	554,5133	0,17	0,076206897
Sweepers/Scrubbers	2017	26	50	Sweepers/Scrubbers_2017_50	2,037349	1,712	6,7185	5,62558	0,005	0,582	0,535	554,5133	0,17	0,076206897
Sweepers/Scrubbers	2017	51	120	Sweepers/Scrubbers_2017_120	0,857444	0,72	4,01005	6,0202	0,005	0,52	0,479	500,4555	0,153	0,068586207
Sweepers/Scrubbers	2017	121	175	Sweepers/Scrubbers_2017_175	0,845582	0,711	3,78429	7,42433	0,005	0,395	0,363	499,4066	0,153	0,068586207
Sweepers/Scrubbers	2017	176	250	Sweepers/Scrubbers_2017_250	0,610026	0,513	2,08973	6,50894	0,005	0,264	0,243	496,2444	0,152	0,068137931
Sweepers/Scrubbers	2018	6	15	Sweepers/Scrubbers_2018_15	1,838607	1,545	6,4442	5,39866	0,005	0,531	0,488	545,7578	0,17	0,076206897
Sweepers/Scrubbers	2018	16	25	Sweepers/Scrubbers_2018_25	1,838607	1,545	6,4442	5,39866	0,005	0,531	0,488	545,7578	0,17	0,076206897
Sweepers/Scrubbers	2018	26	50	Sweepers/Scrubbers_2018_50	1,838607	1,545	6,4442	5,39866	0,005	0,531	0,488	545,7578	0,17	0,076206897
Sweepers/Scrubbers	2018	51	120	Sweepers/Scrubbers_2018_120	0,713411	0,599	3,88173	5,13595	0,005	0,428	0,394	492,5536	0,153	0,068586207
Sweepers/Scrubbers	2018	121	175	Sweepers/Scrubbers_2018_175	0,700892	0,589	3,58832	6,07101	0,005	0,32	0,294	491,5213	0,153	0,068586207
Sweepers/Scrubbers	2018	176	250	Sweepers/Scrubbers_2018_250	0,415916	0,349	1,60478	4,30158	0,005	0,169	0,156	488,409	0,152	0,068137931
Sweepers/Scrubbers	2019	6	15	Sweepers/Scrubbers_2019_15	1,703052	1,431	6,26782	5,22487	0,005	0,491	0,452	537,0023	0,17	0,076206897
Sweepers/Scrubbers	2019	16	25	Sweepers/Scrubbers_2019_25	1,703052	1,431	6,26782	5,22487	0,005	0,491	0,452	537,0023	0,17	0,076206897
Sweepers/Scrubbers	2019	26	50	Sweepers/Scrubbers_2019_50	1,703052	1,431	6,26782	5,22487	0,005	0,491	0,452	537,0023	0,17	0,076206897
Sweepers/Scrubbers	2019	51	120	Sweepers/Scrubbers_2019_120	0,654062	0,55	3,84602	4,77259	0,005	0,387	0,356	484,6516	0,153	0,068586207
Sweepers/Scrubbers	2019	121	175	Sweepers/Scrubbers_2019_175	0,62277	0,523	3,4491	5,30082	0,005	0,277	0,255	483,6359	0,153	0,068586207
Sweepers/Scrubbers	2019	176	250	Sweepers/Scrubbers_2019_250	0,279258	0,235	1,23013	2,86598	0,005	0,099	0,091	480,5735	0,152	0,068137931
Sweepers/Scrubbers	2020	6	15	Sweepers/Scrubbers_2020_15	1,599203	1,344	6,1554	5,09515	0,005	0,463	0,426	525,3284	0,17	0,076206897

Sweepers/Scrubbers	2020	16	25	Sweepers/Scrubbers_2020_25	1,599203	1,344	6,1554	5,09515	0,005	0,463	0,426	525,3284	0,17	0,076206897
Sweepers/Scrubbers	2020	26	50	Sweepers/Scrubbers_2020_50	1,599203	1,344	6,1554	5,09515	0,005	0,463	0,426	525,3284	0,17	0,076206897
Sweepers/Scrubbers	2020	51	120	Sweepers/Scrubbers_2020_120	0,618762	0,52	3,82752	4,4821	0,005	0,36	0,331	474,1157	0,153	0,068586207
Sweepers/Scrubbers	2020	121	175	Sweepers/Scrubbers_2020_175	0,549287	0,462	3,35909	4,60809	0,005	0,237	0,218	473,1221	0,153	0,068586207
Sweepers/Scrubbers	2020	176	250	Sweepers/Scrubbers_2020_250	0,246498	0,207	1,13655	2,4856	0,005	0,079	0,073	470,1263	0,152	0,068137931
Sweepers/Scrubbers	2021	6	15	Sweepers/Scrubbers_2021_15	1,450842	1,219	5,89996	4,84946	0,005	0,412	0,379	525,3284	0,17	0,076206897
Sweepers/Scrubbers	2021	16	25	Sweepers/Scrubbers_2021_25	1,450842	1,219	5,89996	4,84946	0,005	0,412	0,379	525,3284	0,17	0,076206897
Sweepers/Scrubbers	2021	26	50	Sweepers/Scrubbers_2021_50	1,450842	1,219	5,89996	4,84946	0,005	0,412	0,379	525,3284	0,17	0,076206897
Sweepers/Scrubbers	2021	51	120	Sweepers/Scrubbers_2021_120	0,523878	0,44	3,75746	3,96194	0,005	0,291	0,268	474,1157	0,153	0,068586207
Sweepers/Scrubbers	2021	121	175	Sweepers/Scrubbers_2021_175	0,457963	0,385	3,24726	3,70723	0,005	0,187	0,172	473,1221	0,153	0,068586207
Sweepers/Scrubbers	2021	176	250	Sweepers/Scrubbers_2021_250	0,195441	0,164	1,1084	1,75821	0,005	0,055	0,051	470,1263	0,152	0,068137931
Sweepers/Scrubbers	2022	6	15	Sweepers/Scrubbers_2022_15	1,199805	1,008	5,45118	4,49049	0,005	0,335	0,308	525,3284	0,17	0,076206897
Sweepers/Scrubbers	2022	16	25	Sweepers/Scrubbers_2022_25	1,199805	1,008	5,45118	4,49049	0,005	0,335	0,308	525,3284	0,17	0,076206897
Sweepers/Scrubbers	2022	26	50	Sweepers/Scrubbers_2022_50	1,199805	1,008	5,45118	4,49049	0,005	0,335	0,308	525,3284	0,17	0,076206897
Sweepers/Scrubbers	2022	51	120	Sweepers/Scrubbers_2022_120	0,443216	0,372	3,69196	3,47218	0,005	0,232	0,214	474,1157	0,153	0,068586207
Sweepers/Scrubbers	2022	121	175	Sweepers/Scrubbers_2022_175	0,382446	0,321	3,22176	3,00243	0,005	0,145	0,133	473,1221	0,153	0,068586207
Sweepers/Scrubbers	2022	176	250	Sweepers/Scrubbers_2022_250	0,181362	0,152	1,10147	1,60484	0,005	0,05	0,046	470,1263	0,152	0,068137931
Sweepers/Scrubbers	2023	6	15	Sweepers/Scrubbers_2023_15	0,903476	0,759	4,97095	4,12735	0,005	0,248	0,229	525,3284	0,17	0,076206897
Sweepers/Scrubbers	2023	16	25	Sweepers/Scrubbers_2023_25	0,903476	0,759	4,97095	4,12735	0,005	0,248	0,229	525,3284	0,17	0,076206897
Sweepers/Scrubbers	2023	26	50	Sweepers/Scrubbers_2023_50	0,903476	0,759	4,97095	4,12735	0,005	0,248	0,229	525,3284	0,17	0,076206897
Sweepers/Scrubbers	2023	51	120	Sweepers/Scrubbers_2023_120	0,417244	0,351	3,69499	3,28536	0,005	0,21	0,193	474,1157	0,153	0,068586207
Sweepers/Scrubbers	2023	121	175	Sweepers/Scrubbers_2023_175	0,347747	0,292	3,22298	2,60853	0,005	0,126	0,116	473,1221	0,153	0,068586207
Sweepers/Scrubbers	2023	176	250	Sweepers/Scrubbers_2023_250	0,188622	0,158	1,11413	1,61028	0,005	0,05	0,046	470,1263	0,152	0,068137931
Sweepers/Scrubbers	2024	6	15	Sweepers/Scrubbers_2024_15	0,887865	0,746	5,00321	4,0788	0,005	0,239	0,219	525,3284	0,17	0,076206897
Sweepers/Scrubbers	2024	16	25	Sweepers/Scrubbers_2024_25	0,887865	0,746	5,00321	4,0788	0,005	0,239	0,219	525,3284	0,17	0,076206897
Sweepers/Scrubbers	2024	26	50	Sweepers/Scrubbers_2024_50	0,887865	0,746	5,00321	4,0788	0,005	0,239	0,219	525,3284	0,17	0,076206897
Sweepers/Scrubbers	2024	51	120	Sweepers/Scrubbers_2024_120	0,395131	0,332	3,69288	3,09846	0,005	0,188	0,173	474,1157	0,153	0,068586207
Sweepers/Scrubbers	2024	121	175	Sweepers/Scrubbers_2024_175	0,316819	0,266	3,23374	2,2533	0,005	0,107	0,099	473,1221	0,153	0,068586207
Sweepers/Scrubbers	2024	176	250	Sweepers/Scrubbers_2024_250	0,195631	0,164	1,12729	1,61357	0,005	0,051	0,046	470,1263	0,152	0,068137931
Sweepers/Scrubbers	2025	6	15	Sweepers/Scrubbers_2025_15	0,740656	0,622	4,76791	3,85568	0,005	0,191	0,176	525,3284	0,17	0,076206897
Sweepers/Scrubbers	2025	16	25	Sweepers/Scrubbers_2025_25	0,740656	0,622	4,76791	3,85568	0,005	0,191	0,176	525,3284	0,17	0,076206897
Sweepers/Scrubbers	2025	26	50	Sweepers/Scrubbers_2025_50	0,740656	0,622	4,76791	3,85568	0,005	0,191	0,176	525,3284	0,17	0,076206897
Sweepers/Scrubbers	2025	51	120	Sweepers/Scrubbers_2025_120	0,360743	0,303	3,66402	2,81733	0,005	0,16	0,147	474,1157	0,153	0,068586207
Sweepers/Scrubbers	2025	121	175	Sweepers/Scrubbers_2025_175	0,25385	0,213	3,201	1,63811	0,005	0,072	0,066	473,1221	0,153	0,068586207
Sweepers/Scrubbers	2025	176	250	Sweepers/Scrubbers_2025_250	0,202235	0,17	1,14005	1,61588	0,005	0,051	0,047	470,1263	0,152	0,068137931
Sweepers/Scrubbers	2030	6	15	Sweepers/Scrubbers_2030_15	1,624	0,589	3,47	4,142	0,008	0,161	0,161	568,299	0,053	0,023758621
Sweepers/Scrubbers	2030	16	25	Sweepers/Scrubbers_2030_25	3,103	0,685	2,34	4,332	0,007	0,161	0,161	568,299	0,061	0,027344828
Sweepers/Scrubbers	2030	26	50	Sweepers/Scrubbers_2030_50	3,714	0,509	4,947	3,294	0,007	0,026	0,026	568,299	0,046	0,02062069
Sweepers/Scrubbers	2030	51	120	Sweepers/Scrubbers_2030_120	4,528	0,261	3,703	1,569	0,006	0,023	0,023	568,299	0,023	0,010310345
Sweepers/Scrubbers	2030	121	175	Sweepers/Scrubbers_2030_175	6,02	0,187	3,275	0,431	0,006	0,017	0,017	568,299	0,016	0,007172414
Sweepers/Scrubbers	2030	176	250	Sweepers/Scrubbers_2030_250	6,813	0,182	1,116	0,37	0,006	0,013	0,013	568,299	0,016	0,007172414
Sweepers/Scrubbers	2035	6	15	Sweepers/Scrubbers_2035_15	1,624	0,589	3,47	4,142	0,008	0,161	0,161	568,299	0,053	0,023758621
Sweepers/Scrubbers	2035	16	25	Sweepers/Scrubbers_2035_25	3,103	0,685	2,34	4,332	0,007	0,161	0,161	568,3	0,061	0,027344828
Sweepers/Scrubbers	2035	26	50	Sweepers/Scrubbers_2035_50	3,681	0,505	4,929	3,214	0,007	0,017	0,017	568,299	0,045	0,020172414
Sweepers/Scrubbers	2035	51	120	Sweepers/Scrubbers_2035_120	4,386	0,253	3,698	1,486	0,006	0,016	0,016	568,299	0,022	0,009862069
Sweepers/Scrubbers	2035	121	175	Sweepers/Scrubbers_2035_175	5,628	0,175	3,271	0,313	0,006	0,012	0,012	568,299	0,015	0,006724138
Sweepers/Scrubbers	2035	176	250	Sweepers/Scrubbers_2035_250	6,501	0,173	1,114	0,294	0,006	0,011	0,011	568,299	0,015	0,006724138
Sweepers/Scrubbers	2040	6	15	Sweepers/Scrubbers_2040_15	1,624	0,589	3,47	4,142	0,008	0,161	0,161	568,3	0,053	0,023758621
Sweepers/Scrubbers	2040	16	25	Sweepers/Scrubbers_2040_25	3,103	0,685	2,34	4,332	0,007	0,161	0,161	568,299	0,061	0,027344828
Sweepers/Scrubbers	2040	26	50	Sweepers/Scrubbers_2040_50	3,675	0,504	4,925	3,203	0,007	0,016	0,016	568,3	0,045	0,020172414
Sweepers/Scrubbers	2040	51	120	Sweepers/Scrubbers_2040_120	4,354	0,251	3,697	1,469	0,006	0,015	0,015	568,299	0,022	0,009862069
Sweepers/Scrubbers	2040	121	175	Sweepers/Scrubbers_2040_175	5,537	0,172	3,27	0,284	0,006	0,011	0,011	568,299	0,015	0,006724138
Sweepers/Scrubbers	2040	176	250	Sweepers/Scrubbers_2040_250	6,454	0,172	1,114	0,284	0,006	0,011	0,011	568,299	0,015	0,006724138
Tractors/Loaders/Backhoes	1990	16	25	Tractors/Loaders/Backhoes_1990_25	5,699	2,213	4,999	6,919	0,855	0,741	0,741	568,299	0,199	0,089206897
Tractors/Loaders/Backhoes	1990	26	50	Tractors/Loaders/Backhoes_1990_50	23,587	4,787	9,698	7,939	0,871	1,267	1,267	568,299	0,431	0,193206897
Tractors/Loaders/Backhoes	1990	51	120	Tractors/Loaders/Backhoes_1990_120	19,595	2,333	5,659	14,779	0,791	1,327	1,327	568,299	0,21	0,094137931
Tractors/Loaders/Backhoes	1990	121	175	Tractors/Loaders/Backhoes_1990_175	28,833	1,751	5,008	14,021	0,758	0,974	0,974	568,299	0,158	0,070827586
Tractors/Loaders/Backhoes	1990	176	250	Tractors/Loaders/Backhoes_1990_250	48,841	1,751	5,008	14,021	0,758	0,974	0,974	568,299	0,158	0,070827586
Tractors/Loaders/Backhoes	1990	251	500	Tractors/Loaders/Backhoes_1990_500	86,854	1,551	10,967	13,298	0,758	0,834	0,834	568,3	0,139	0,062310345
Tractors/Loaders/Backhoes	1990	501	750	Tractors/Loaders/Backhoes_1990_750	130,281	1,551	10,967	13,298	1,139	0,85	0,85	568,299	0,139	0,062310345
Tractors/Loaders/Backhoes	2000	16	25	Tractors/Loaders/Backhoes_2000_25	5,225	2,029	4,66	6,391	0,065	0,57	0,57	568,299	0,183	0,082034483
Tractors/Loaders/Backhoes	2000	26	50	Tractors/Loaders/Backhoes_2000_50	21,043	4,271	8,855	6,964	0,066	0,903	0,903	568,299	0,385	0,172586207
Tractors/Loaders/Backhoes	2000	51	120	Tractors/Loaders/Backhoes_2000_120	14,597	1,738	4,448	9,784	0,06	0,862	0,862	568,299	0,156	0,069931034
Tractors/Loaders/Backhoes	2000	121	175	Tractors/Loaders/Backhoes_2000_175	19,393	1,178	3,534	9,027	0,057	0,494	0,494	568,299	0,106	0,047517241
Tractors/Loaders/Backhoes	2000	176	250	Tractors/Loaders/Backhoes_2000_250	26,283	0,942	2,634	8,625	0,057	0,38	0,38	568,299	0,085	0,038103448
Tractors/Loaders/Backhoes	2000	251	500	Tractors/Loaders/Backhoes_2000_500	48,341	0,863	3,629	8,225	0,057	0,339	0,339	568,299	0,077	0,034517241
Tractors/Loaders/Backhoes	2000	501	750	Tractors/Loaders/Backhoes_2000_750	72,512	0,863	3,629	8,225	0,059	0,339	0,339	568,299	0,077	0,034517241
Tractors/Loaders/Backhoes	2005	16	25	Tractors/Loaders/Backhoes_2005_25	3,067	1,191	3,137	5,648	0,065	0,404	0,404	568,299	0,107	0,047965517
Tractors/Loaders/Backhoes	2005	26	50	Tractors/Loaders/Backhoes_2005_50	18,069	3,667	8,018	6,405	0,066	0,819	0,819	568,299	0,33	0,147931034
Tractors/Loaders/Backhoes	2005	51	120	Tractors/Loaders/Backhoes_2005_120	12,595	1,499	4,22	8,325	0,06	0,802	0,802	568,299	0,135	0,060517241
Tractors/Loaders/Backhoes	2005	121	175	Tractors/Loaders/Backhoes_2005_175	16,035	0,974	3,341	7,629	0,057	0,432	0,432	568,3	0,087	0,039
Tractors/Loaders/Backhoes	2005	176	250	Tractors/Loaders/Backhoes_2005_250	18,392	0,659	1,774	7,181	0,057	0,256	0,256	568,3	0,059	0,026448276
Tractors/Loaders/Backhoes	2005	251	500	Tractors/Loaders/Backhoes_2005_500	32,511	0,58	1,993	6,451	0,057	0,23	0,23	568,299	0,052	0,023310345

Tractors/Loaders/Backhoes	2005	501	750	Tractors/Loaders/Backhoes_2005_750	49,91	0,594	1,99	6,656	0,059	0,234	0,234	568,299	0,053	0,023758621
Tractors/Loaders/Backhoes	2010	16	25	Tractors/Loaders/Backhoes_2010_25	1,894649	1,592	5,95576	5,63221	0,005	0,561	0,516	569,9866	0,166	0,074413793
Tractors/Loaders/Backhoes	2010	26	50	Tractors/Loaders/Backhoes_2010_50	1,894649	1,592	5,95576	5,63221	0,005	0,561	0,516	569,9866	0,166	0,074413793
Tractors/Loaders/Backhoes	2010	51	120	Tractors/Loaders/Backhoes_2010_120	0,792369	0,666	3,83197	6,31224	0,005	0,504	0,464	533,5879	0,155	0,069482759
Tractors/Loaders/Backhoes	2010	121	175	Tractors/Loaders/Backhoes_2010_175	0,559066	0,47	3,20391	5,68573	0,005	0,285	0,263	521,9624	0,152	0,068137931
Tractors/Loaders/Backhoes	2010	176	250	Tractors/Loaders/Backhoes_2010_250	0,408454	0,343	1,44044	5,58586	0,005	0,178	0,163	522,8516	0,152	0,068137931
Tractors/Loaders/Backhoes	2010	251	500	Tractors/Loaders/Backhoes_2010_500	0,391383	0,329	2,07689	5,18517	0,005	0,172	0,158	526,5923	0,153	0,068586207
Tractors/Loaders/Backhoes	2010	501	750	Tractors/Loaders/Backhoes_2010_750	0,330642	0,278	1,80487	4,39795	0,005	0,153	0,141	517,4169	0,151	0,067689655
Tractors/Loaders/Backhoes	2011	16	25	Tractors/Loaders/Backhoes_2011_25	1,788969	1,503	5,86306	5,58613	0,005	0,54	0,497	569,4176	0,166	0,074413793
Tractors/Loaders/Backhoes	2011	26	50	Tractors/Loaders/Backhoes_2011_50	1,788969	1,503	5,86306	5,58613	0,005	0,54	0,497	569,4176	0,166	0,074413793
Tractors/Loaders/Backhoes	2011	51	120	Tractors/Loaders/Backhoes_2011_120	0,766159	0,644	3,83083	6,12981	0,005	0,491	0,451	531,2907	0,155	0,069482759
Tractors/Loaders/Backhoes	2011	121	175	Tractors/Loaders/Backhoes_2011_175	0,544391	0,457	3,21464	5,49667	0,005	0,277	0,255	520,8772	0,152	0,068137931
Tractors/Loaders/Backhoes	2011	176	250	Tractors/Loaders/Backhoes_2011_250	0,400263	0,336	1,41416	5,38873	0,005	0,172	0,158	521,7143	0,152	0,068137931
Tractors/Loaders/Backhoes	2011	251	500	Tractors/Loaders/Backhoes_2011_500	0,383321	0,322	2,01155	4,98779	0,005	0,167	0,154	525,0356	0,153	0,068586207
Tractors/Loaders/Backhoes	2011	501	750	Tractors/Loaders/Backhoes_2011_750	0,337174	0,283	1,80098	4,35896	0,005	0,153	0,14	516,0241	0,151	0,067689655
Tractors/Loaders/Backhoes	2012	16	25	Tractors/Loaders/Backhoes_2012_25	1,778006	1,494	5,92961	5,57167	0,005	0,537	0,494	568,1171	0,166	0,074413793
Tractors/Loaders/Backhoes	2012	26	50	Tractors/Loaders/Backhoes_2012_50	1,778006	1,494	5,92961	5,57167	0,005	0,537	0,494	568,1171	0,166	0,074413793
Tractors/Loaders/Backhoes	2012	51	120	Tractors/Loaders/Backhoes_2012_120	0,765477	0,643	3,85825	6,07938	0,005	0,49	0,45	529,8013	0,155	0,069482759
Tractors/Loaders/Backhoes	2012	121	175	Tractors/Loaders/Backhoes_2012_175	0,55208	0,464	3,24733	5,48812	0,005	0,279	0,257	519,5807	0,152	0,068137931
Tractors/Loaders/Backhoes	2012	176	250	Tractors/Loaders/Backhoes_2012_250	0,408595	0,343	1,42415	5,3794	0,005	0,173	0,159	520,5233	0,152	0,068137931
Tractors/Loaders/Backhoes	2012	251	500	Tractors/Loaders/Backhoes_2012_500	0,391545	0,329	2,03631	4,9585	0,005	0,168	0,154	523,6066	0,153	0,068586207
Tractors/Loaders/Backhoes	2012	501	750	Tractors/Loaders/Backhoes_2012_750	0,34578	0,291	1,81138	4,30593	0,005	0,153	0,141	514,6158	0,151	0,067689655
Tractors/Loaders/Backhoes	2013	16	25	Tractors/Loaders/Backhoes_2013_25	1,710175	1,437	5,8983	5,50692	0,005	0,52	0,478	566,4101	0,167	0,074862069
Tractors/Loaders/Backhoes	2013	26	50	Tractors/Loaders/Backhoes_2013_50	1,710175	1,437	5,8983	5,50692	0,005	0,52	0,478	566,4101	0,167	0,074862069
Tractors/Loaders/Backhoes	2013	51	120	Tractors/Loaders/Backhoes_2013_120	0,736849	0,619	3,85259	5,88177	0,005	0,468	0,431	526,7149	0,155	0,069482759
Tractors/Loaders/Backhoes	2013	121	175	Tractors/Loaders/Backhoes_2013_175	0,53894	0,453	3,25593	5,32658	0,005	0,269	0,248	516,748	0,152	0,068137931
Tractors/Loaders/Backhoes	2013	176	250	Tractors/Loaders/Backhoes_2013_250	0,404183	0,34	1,40715	5,22143	0,005	0,168	0,155	517,9916	0,152	0,068137931
Tractors/Loaders/Backhoes	2013	251	500	Tractors/Loaders/Backhoes_2013_500	0,386263	0,325	1,98237	4,77348	0,005	0,162	0,149	520,6472	0,153	0,068586207
Tractors/Loaders/Backhoes	2013	501	750	Tractors/Loaders/Backhoes_2013_750	0,357231	0,3	1,8218	4,31599	0,005	0,155	0,143	511,8955	0,151	0,067689655
Tractors/Loaders/Backhoes	2014	16	25	Tractors/Loaders/Backhoes_2014_25	1,58953	1,336	5,77182	5,36869	0,005	0,488	0,449	564,0421	0,167	0,074862069
Tractors/Loaders/Backhoes	2014	26	50	Tractors/Loaders/Backhoes_2014_50	1,58953	1,336	5,77182	5,36869	0,005	0,488	0,449	564,0421	0,167	0,074862069
Tractors/Loaders/Backhoes	2014	51	120	Tractors/Loaders/Backhoes_2014_120	0,692813	0,582	3,82724	5,58081	0,005	0,438	0,403	523,0168	0,155	0,069482759
Tractors/Loaders/Backhoes	2014	121	175	Tractors/Loaders/Backhoes_2014_175	0,503298	0,423	3,23863	4,93788	0,005	0,248	0,228	513,8903	0,152	0,068137931
Tractors/Loaders/Backhoes	2014	176	250	Tractors/Loaders/Backhoes_2014_250	0,389056	0,327	1,37555	4,92175	0,005	0,159	0,146	515,1747	0,152	0,068137931
Tractors/Loaders/Backhoes	2014	251	500	Tractors/Loaders/Backhoes_2014_500	0,371559	0,312	1,87787	4,48819	0,005	0,152	0,14	517,1237	0,153	0,068586207
Tractors/Loaders/Backhoes	2014	501	750	Tractors/Loaders/Backhoes_2014_750	0,362599	0,305	1,8331	4,24344	0,005	0,154	0,141	511,3367	0,151	0,067689655
Tractors/Loaders/Backhoes	2015	16	25	Tractors/Loaders/Backhoes_2015_25	1,555682	1,307	5,79091	5,32019	0,005	0,477	0,439	558,7085	0,167	0,074862069
Tractors/Loaders/Backhoes	2015	26	50	Tractors/Loaders/Backhoes_2015_50	1,555682	1,307	5,79091	5,32019	0,005	0,477	0,439	558,7085	0,167	0,074862069
Tractors/Loaders/Backhoes	2015	51	120	Tractors/Loaders/Backhoes_2015_120	0,677539	0,569	3,83198	5,4221	0,005	0,424	0,39	517,3652	0,154	0,069034483
Tractors/Loaders/Backhoes	2015	121	175	Tractors/Loaders/Backhoes_2015_175	0,501434	0,421	3,2559	4,83599	0,005	0,244	0,225	508,6819	0,152	0,068137931
Tractors/Loaders/Backhoes	2015	176	250	Tractors/Loaders/Backhoes_2015_250	0,387795	0,326	1,37366	4,7831	0,005	0,155	0,143	509,6269	0,152	0,068137931
Tractors/Loaders/Backhoes	2015	251	500	Tractors/Loaders/Backhoes_2015_500	0,371246	0,312	1,88403	4,34833	0,005	0,149	0,137	511,8685	0,153	0,068586207
Tractors/Loaders/Backhoes	2015	501	750	Tractors/Loaders/Backhoes_2015_750	0,36596	0,308	1,823	4,1848	0,005	0,152	0,14	506,1469	0,151	0,067689655
Tractors/Loaders/Backhoes	2016	16	25	Tractors/Loaders/Backhoes_2016_25	1,488115	1,25	5,74113	5,21373	0,005	0,455	0,418	553,3996	0,167	0,074862069
Tractors/Loaders/Backhoes	2016	26	50	Tractors/Loaders/Backhoes_2016_50	1,488115	1,25	5,74113	5,21373	0,005	0,455	0,418	553,3996	0,167	0,074862069
Tractors/Loaders/Backhoes	2016	51	120	Tractors/Loaders/Backhoes_2016_120	0,640315	0,538	3,81146	5,14235	0,005	0,396	0,364	511,3456	0,154	0,069034483
Tractors/Loaders/Backhoes	2016	121	175	Tractors/Loaders/Backhoes_2016_175	0,46319	0,389	3,23229	4,37945	0,005	0,222	0,204	502,6294	0,152	0,068137931
Tractors/Loaders/Backhoes	2016	176	250	Tractors/Loaders/Backhoes_2016_250	0,369743	0,311	1,34719	4,42611	0,005	0,145	0,133	504,4014	0,152	0,068137931
Tractors/Loaders/Backhoes	2016	251	500	Tractors/Loaders/Backhoes_2016_500	0,337794	0,284	1,78642	3,7866	0,005	0,131	0,121	505,2698	0,152	0,068137931
Tractors/Loaders/Backhoes	2016	501	750	Tractors/Loaders/Backhoes_2016_750	0,357237	0,3	1,67424	4,0216	0,005	0,144	0,133	500,955	0,151	0,067689655
Tractors/Loaders/Backhoes	2017	16	25	Tractors/Loaders/Backhoes_2017_25	1,421071	1,194	5,68921	5,10958	0,005	0,433	0,398	544,9286	0,167	0,074862069
Tractors/Loaders/Backhoes	2017	26	50	Tractors/Loaders/Backhoes_2017_50	1,421071	1,194	5,68921	5,10958	0,005	0,433	0,398	544,9286	0,167	0,074862069
Tractors/Loaders/Backhoes	2017	51	120	Tractors/Loaders/Backhoes_2017_120	0,595595	0,5	3,7818	4,8087	0,005	0,362	0,333	502,7952	0,154	0,069034483
Tractors/Loaders/Backhoes	2017	121	175	Tractors/Loaders/Backhoes_2017_175	0,420865	0,354	3,19961	3,87876	0,005	0,197	0,181	493,912	0,151	0,067689655
Tractors/Loaders/Backhoes	2017	176	250	Tractors/Loaders/Backhoes_2017_250	0,346619	0,291	1,30369	4,04062	0,005	0,132	0,121	496,8449	0,152	0,068137931
Tractors/Loaders/Backhoes	2017	251	500	Tractors/Loaders/Backhoes_2017_500	0,323689	0,272	1,73851	3,48988	0,005	0,122	0,112	497,1129	0,152	0,068137931
Tractors/Loaders/Backhoes	2017	501	750	Tractors/Loaders/Backhoes_2017_750	0,35268	0,296	1,64567	3,86196	0,005	0,139	0,128	492,9529	0,151	0,067689655
Tractors/Loaders/Backhoes	2018	16	25	Tractors/Loaders/Backhoes_2018_25	1,180685	0,992	5,31043	4,76441	0,005	0,363	0,334	536,1115	0,167	0,074862069
Tractors/Loaders/Backhoes	2018	26	50	Tractors/Loaders/Backhoes_2018_50	1,180685	0,992	5,31043	4,76441	0,005	0,363	0,334	536,1115	0,167	0,074862069
Tractors/Loaders/Backhoes	2018	51	120	Tractors/Loaders/Backhoes_2018_120	0,5003	0,42	3,69155	4,15444	0,005	0,294	0,271	494,1237	0,154	0,069034483
Tractors/Loaders/Backhoes	2018	121	175	Tractors/Loaders/Backhoes_2018_175	0,353485	0,297	3,13727	3,16806	0,005	0,16	0,147	485,7754	0,151	0,067689655
Tractors/Loaders/Backhoes	2018	176	250	Tractors/Loaders/Backhoes_2018_250	0,308076	0,259	1,24197	3,45965	0,005	0,112	0,103	489,4562	0,152	0,068137931
Tractors/Loaders/Backhoes	2018	251	500	Tractors/Loaders/Backhoes_2018_500	0,264454	0,222	1,44545	2,66877	0,005	0,092	0,085	486,2939	0,151	0,067689655
Tractors/Loaders/Backhoes	2018	501	750	Tractors/Loaders/Backhoes_2018_750	0,322751	0,271	1,60068	3,40235	0,005	0,124	0,114	485,0099	0,151	0,067689655
Tractors/Loaders/Backhoes	2019	16	25	Tractors/Loaders/Backhoes_2019_25	1,095082	0,92	5,20327	4,60928	0,005	0,33	0,304	527,6843	0,167	0,074862069
Tractors/Loaders/Backhoes	2019	26	50	Tractors/Loaders/Backhoes_2019_50	1,095082	0,92	5,20327	4,60928	0,005	0,33	0,304	527,6843	0,167	0,074862069
Tractors/Loaders/Backhoes	2019	51	120	Tractors/Loaders/Backhoes_2019_120	0,437701	0,368	3,63777	3,69257	0,005	0,247	0,227	485,8548	0,154	0,069034483
Tractors/Loaders/Backhoes	2019	121	175	Tractors/Loaders/Backhoes_2019_175	0,321856	0,27	3,12158	2,78412	0,005	0,14	0,129	477,9151	0,151	0,067689655
Tractors/Loaders/Backhoes	2019	176	250	Tractors/Loaders/Backhoes_2019_250	0,291458	0,245	1,22027	3,14683	0,005	0,102	0,094	481,4206	0,152	0,068137931
Tractors/Loaders/Backhoes	2019	251	500	Tractors/Loaders/Backhoes_2019_500	0,245176	0,206	1,38918	2,34458	0,005	0,082	0,075	479,0826	0,152	0,068137931
Tractors/Loaders/Backhoes	2019	501	750	Tractors/Loaders/Backhoes_2019_750	0,311873	0,262	1,6025	3,12046	0,005	0,117	0,107	478,9216	0,152	0,068137931
Tractors/Loaders/Backhoes	2020	16	25	Tractors/Loaders/Backhoes_2020_25	0,987255	0,83	5,03491	4,39784	0,005	0,288	0,265	515,874	0,167	0,074862069
Tractors/Loaders/Backhoes	2020	26	50	Tractors/Loaders/Backhoes_2020_50	0,987255	0,83	5,03491	4,39784	0,005	0,288	0,265	515,874	0,167	0,074862069

Tractors/Loaders/Backhoes	2020	51	120	Tractors/Loaders/Backhoes_2020_120	0,393883	0,331	3,60147	3,32571	0,005	0,21	0,193	475,1543	0,154	0,069034483
Tractors/Loaders/Backhoes	2020	121	175	Tractors/Loaders/Backhoes_2020_175	0,29217	0,246	3,10518	2,41467	0,005	0,122	0,112	467,5132	0,151	0,067689655
Tractors/Loaders/Backhoes	2020	176	250	Tractors/Loaders/Backhoes_2020_250	0,268036	0,225	1,19592	2,73794	0,005	0,09	0,083	470,4998	0,152	0,068137931
Tractors/Loaders/Backhoes	2020	251	500	Tractors/Loaders/Backhoes_2020_500	0,230511	0,194	1,35815	2,07976	0,005	0,073	0,067	468,2447	0,151	0,067689655
Tractors/Loaders/Backhoes	2020	501	750	Tractors/Loaders/Backhoes_2020_750	0,318709	0,268	1,60984	3,11926	0,005	0,117	0,108	468,6602	0,152	0,068137931
Tractors/Loaders/Backhoes	2021	16	25	Tractors/Loaders/Backhoes_2021_25	0,899672	0,756	4,90172	4,22643	0,005	0,254	0,234	515,1213	0,167	0,074862069
Tractors/Loaders/Backhoes	2021	26	50	Tractors/Loaders/Backhoes_2021_50	0,899672	0,756	4,90172	4,22643	0,005	0,254	0,234	515,1213	0,167	0,074862069
Tractors/Loaders/Backhoes	2021	51	120	Tractors/Loaders/Backhoes_2021_120	0,35209	0,296	3,57072	2,995	0,005	0,177	0,162	475,3621	0,154	0,069034483
Tractors/Loaders/Backhoes	2021	121	175	Tractors/Loaders/Backhoes_2021_175	0,263016	0,221	3,0907	2,06221	0,005	0,104	0,096	467,5285	0,151	0,067689655
Tractors/Loaders/Backhoes	2021	176	250	Tractors/Loaders/Backhoes_2021_250	0,249239	0,209	1,18606	2,36922	0,005	0,08	0,074	470,5716	0,152	0,068137931
Tractors/Loaders/Backhoes	2021	251	500	Tractors/Loaders/Backhoes_2021_500	0,213479	0,179	1,34147	1,776	0,005	0,064	0,059	469,3025	0,152	0,068137931
Tractors/Loaders/Backhoes	2021	501	750	Tractors/Loaders/Backhoes_2021_750	0,294477	0,247	1,43254	2,75417	0,005	0,104	0,096	466,4564	0,151	0,067689655
Tractors/Loaders/Backhoes	2022	16	25	Tractors/Loaders/Backhoes_2022_25	0,818675	0,688	4,75954	4,03024	0,005	0,218	0,2	514,4613	0,166	0,074413793
Tractors/Loaders/Backhoes	2022	26	50	Tractors/Loaders/Backhoes_2022_50	0,818675	0,688	4,75954	4,03024	0,005	0,218	0,2	514,4613	0,166	0,074413793
Tractors/Loaders/Backhoes	2022	51	120	Tractors/Loaders/Backhoes_2022_120	0,309669	0,26	3,53551	2,64718	0,005	0,142	0,131	475,8975	0,154	0,069034483
Tractors/Loaders/Backhoes	2022	121	175	Tractors/Loaders/Backhoes_2022_175	0,237945	0,2	3,07944	1,75274	0,005	0,089	0,082	467,8004	0,151	0,067689655
Tractors/Loaders/Backhoes	2022	176	250	Tractors/Loaders/Backhoes_2022_250	0,222521	0,187	1,16248	1,94251	0,005	0,067	0,062	470,1236	0,152	0,068137931
Tractors/Loaders/Backhoes	2022	251	500	Tractors/Loaders/Backhoes_2022_500	0,190771	0,16	1,28026	1,43694	0,005	0,053	0,049	469,2562	0,152	0,068137931
Tractors/Loaders/Backhoes	2022	501	750	Tractors/Loaders/Backhoes_2022_750	0,276438	0,232	1,35272	2,4532	0,005	0,094	0,087	466,6327	0,151	0,067689655
Tractors/Loaders/Backhoes	2023	16	25	Tractors/Loaders/Backhoes_2023_25	0,738634	0,621	4,62935	3,85698	0,005	0,185	0,17	513,7962	0,166	0,074413793
Tractors/Loaders/Backhoes	2023	26	50	Tractors/Loaders/Backhoes_2023_50	0,738634	0,621	4,62935	3,85698	0,005	0,185	0,17	513,7962	0,166	0,074413793
Tractors/Loaders/Backhoes	2023	51	120	Tractors/Loaders/Backhoes_2023_120	0,284572	0,239	3,52504	2,42607	0,005	0,12	0,11	476,4307	0,154	0,069034483
Tractors/Loaders/Backhoes	2023	121	175	Tractors/Loaders/Backhoes_2023_175	0,219196	0,184	3,0777	1,52095	0,005	0,077	0,07	468,821	0,152	0,068137931
Tractors/Loaders/Backhoes	2023	176	250	Tractors/Loaders/Backhoes_2023_250	0,201205	0,169	1,14809	1,58768	0,005	0,058	0,053	469,7518	0,152	0,068137931
Tractors/Loaders/Backhoes	2023	251	500	Tractors/Loaders/Backhoes_2023_500	0,180818	0,152	1,27923	1,24708	0,005	0,047	0,043	469,4652	0,152	0,068137931
Tractors/Loaders/Backhoes	2023	501	750	Tractors/Loaders/Backhoes_2023_750	0,278685	0,234	1,36081	2,41861	0,005	0,095	0,087	466,6756	0,151	0,067689655
Tractors/Loaders/Backhoes	2024	16	25	Tractors/Loaders/Backhoes_2024_25	0,701609	0,59	4,60899	3,76811	0,005	0,166	0,153	513,8517	0,166	0,074413793
Tractors/Loaders/Backhoes	2024	26	50	Tractors/Loaders/Backhoes_2024_50	0,701609	0,59	4,60899	3,76811	0,005	0,166	0,153	513,8517	0,166	0,074413793
Tractors/Loaders/Backhoes	2024	51	120	Tractors/Loaders/Backhoes_2024_120	0,270597	0,227	3,5318	2,28795	0,005	0,105	0,097	476,7313	0,154	0,069034483
Tractors/Loaders/Backhoes	2024	121	175	Tractors/Loaders/Backhoes_2024_175	0,209421	0,176	3,08913	1,37643	0,005	0,068	0,063	469,4029	0,152	0,068137931
Tractors/Loaders/Backhoes	2024	176	250	Tractors/Loaders/Backhoes_2024_250	0,199431	0,168	1,15125	1,49113	0,005	0,054	0,05	469,9143	0,152	0,068137931
Tractors/Loaders/Backhoes	2024	251	500	Tractors/Loaders/Backhoes_2024_500	0,178929	0,15	1,277	1,16321	0,005	0,044	0,041	470,0841	0,152	0,068137931
Tractors/Loaders/Backhoes	2024	501	750	Tractors/Loaders/Backhoes_2024_750	0,262816	0,221	1,31051	2,21548	0,005	0,085	0,079	466,6381	0,151	0,067689655
Tractors/Loaders/Backhoes	2025	16	25	Tractors/Loaders/Backhoes_2025_25	0,654585	0,55	4,55974	3,66186	0,005	0,145	0,133	513,8025	0,166	0,074413793
Tractors/Loaders/Backhoes	2025	26	50	Tractors/Loaders/Backhoes_2025_50	0,654585	0,55	4,55974	3,66186	0,005	0,145	0,133	513,8025	0,166	0,074413793
Tractors/Loaders/Backhoes	2025	51	120	Tractors/Loaders/Backhoes_2025_120	0,248412	0,209	3,52242	2,10918	0,005	0,085	0,079	477,188	0,154	0,069034483
Tractors/Loaders/Backhoes	2025	121	175	Tractors/Loaders/Backhoes_2025_175	0,192617	0,162	3,08323	1,18039	0,005	0,058	0,054	469,3289	0,152	0,068137931
Tractors/Loaders/Backhoes	2025	176	250	Tractors/Loaders/Backhoes_2025_250	0,183368	0,154	1,14554	1,23458	0,005	0,047	0,044	470,5976	0,152	0,068137931
Tractors/Loaders/Backhoes	2025	251	500	Tractors/Loaders/Backhoes_2025_500	0,171862	0,144	1,23405	1,04575	0,005	0,039	0,036	470,9102	0,152	0,068137931
Tractors/Loaders/Backhoes	2025	501	750	Tractors/Loaders/Backhoes_2025_750	0,222943	0,187	1,26139	1,64868	0,005	0,067	0,062	466,4517	0,151	0,067689655
Tractors/Loaders/Backhoes	2030	16	25	Tractors/Loaders/Backhoes_2030_25	1,765	0,685	2,339	4,332	0,007	0,161	0,161	568,299	0,061	0,027344828
Tractors/Loaders/Backhoes	2030	26	50	Tractors/Loaders/Backhoes_2030_50	2,657	0,539	4,966	3,299	0,007	0,033	0,033	568,299	0,048	0,021517241
Tractors/Loaders/Backhoes	2030	51	120	Tractors/Loaders/Backhoes_2030_120	2,285	0,272	3,705	1,624	0,006	0,03	0,03	568,299	0,024	0,010758621
Tractors/Loaders/Backhoes	2030	121	175	Tractors/Loaders/Backhoes_2030_175	3,178	0,193	3,273	0,485	0,006	0,02	0,02	568,299	0,017	0,00762069
Tractors/Loaders/Backhoes	2030	176	250	Tractors/Loaders/Backhoes_2030_250	5,112	0,183	1,115	0,418	0,006	0,014	0,014	568,299	0,016	0,007172414
Tractors/Loaders/Backhoes	2030	251	500	Tractors/Loaders/Backhoes_2030_500	10,236	0,182	1,066	0,403	0,006	0,014	0,014	568,299	0,016	0,007172414
Tractors/Loaders/Backhoes	2030	501	750	Tractors/Loaders/Backhoes_2030_750	15,363	0,182	1,066	0,407	0,006	0,014	0,014	568,299	0,016	0,007172414
Tractors/Loaders/Backhoes	2035	16	25	Tractors/Loaders/Backhoes_2035_25	1,765	0,685	2,339	4,332	0,007	0,161	0,161	568,299	0,061	0,027344828
Tractors/Loaders/Backhoes	2035	26	50	Tractors/Loaders/Backhoes_2035_50	2,538	0,515	4,949	3,244	0,007	0,022	0,022	568,299	0,046	0,02062069
Tractors/Loaders/Backhoes	2035	51	120	Tractors/Loaders/Backhoes_2035_120	2,17	0,258	3,703	1,521	0,006	0,02	0,02	568,299	0,023	0,010310345
Tractors/Loaders/Backhoes	2035	121	175	Tractors/Loaders/Backhoes_2035_175	2,956	0,179	3,275	0,348	0,006	0,015	0,015	568,299	0,016	0,007172414
Tractors/Loaders/Backhoes	2035	176	250	Tractors/Loaders/Backhoes_2035_250	4,945	0,177	1,115	0,331	0,006	0,012	0,012	568,299	0,016	0,007172414
Tractors/Loaders/Backhoes	2035	251	500	Tractors/Loaders/Backhoes_2035_500	9,922	0,177	1,066	0,326	0,006	0,012	0,012	568,299	0,015	0,006724138
Tractors/Loaders/Backhoes	2035	501	750	Tractors/Loaders/Backhoes_2035_750	14,886	0,177	1,066	0,327	0,006	0,012	0,012	568,299	0,015	0,006724138
Tractors/Loaders/Backhoes	2040	16	25	Tractors/Loaders/Backhoes_2040_25	1,765	0,685	2,339	4,332	0,007	0,161	0,161	568,299	0,061	0,027344828
Tractors/Loaders/Backhoes	2040	26	50	Tractors/Loaders/Backhoes_2040_50	2,506	0,508	4,946	3,22	0,007	0,018	0,018	568,299	0,045	0,020172414
Tractors/Loaders/Backhoes	2040	51	120	Tractors/Loaders/Backhoes_2040_120	2,135	0,254	3,703	1,485	0,006	0,016	0,016	568,299	0,022	0,009862069
Tractors/Loaders/Backhoes	2040	121	175	Tractors/Loaders/Backhoes_2040_175	2,891	0,175	3,276	0,305	0,006	0,012	0,012	568,299	0,015	0,006724138
Tractors/Loaders/Backhoes	2040	176	250	Tractors/Loaders/Backhoes_2040_250	4,877	0,174	1,116	0,297	0,006	0,011	0,011	568,3	0,015	0,006724138
Tractors/Loaders/Backhoes	2040	251	500	Tractors/Loaders/Backhoes_2040_500	9,794	0,174	1,066	0,297	0,006	0,011	0,011	568,299	0,015	0,006724138
Tractors/Loaders/Backhoes	2040	501	750	Tractors/Loaders/Backhoes_2040_750	14,69	0,174	1,066	0,297	0,006	0,011	0,011	568,299	0,015	0,006724138
Trenchers	1990	6	15	Trenchers_1990_15	3,844	1,804	4,999	9,999	1,049	0,975	0,975	568,299	0,162	0,07262069
Trenchers	1990	16	25	Trenchers_1990_25	18,341	2,213	4,999	6,919	0,855	0,741	0,741	568,3	0,199	0,089206897
Trenchers	1990	26	50	Trenchers_1990_50	37,589	4,535	9,232	7,849	0,871	1,215	1,215	568,3	0,409	0,183344828
Trenchers	1990	51	120	Trenchers_1990_120	37,519	2,296	5,621	14,752	0,791	1,284	1,284	568,299	0,207	0,092793103
Trenchers	1990	121	175	Trenchers_1990_175	63,364	1,748	5,014	14,125	0,758	0,96	0,96	568,299	0,157	0,07037931
Trenchers	1990	176	250	Trenchers_1990_250	98,152	1,748	5,014	14,125	0,758	0,96	0,96	568,299	0,157	0,07037931
Trenchers	1990	251	500	Trenchers_1990_500	121,775	1,553	10,572	13,45	0,662	0,827	0,827	568,299	0,14	0,062758621
Trenchers	1990	501	750	Trenchers_1990_750	229,57	1,553	10,572	13,45	1,018	0,843	0,843	568,299	0,14	0,062758621
Trenchers	2000	6	15	Trenchers_2000_15	2,824	1,325	4,257	7,675	0,079	0,61	0,61	568,299	0,119	0,053344828
Trenchers	2000	16	25	Trenchers_2000_25	15,815	1,908	4,438	6,326	0,065	0,555	0,555	568,299	0,172	0,077103448
Trenchers	2000	26	50	Trenchers_2000_50	34,945	4,216	8,713	7,029	0,066	0,89	0,89	568,299	0,38	0,170344828
Trenchers	2000	51	120	Trenchers_2000_120	30,939	1,893	4,777	10,98	0,06	0,882	0,882	568,299	0,17	0,076206897

Trenchers	2000	121	175	Trenchers_2000_175	46,959	1,296	3,969	10,057	0,057	0,541	0,541	568,299	0,116	0,052
Trenchers	2000	176	250	Trenchers_2000_250	64,645	1,151	3,402	9,8	0,057	0,474	0,474	568,299	0,103	0,046172414
Trenchers	2000	251	500	Trenchers_2000_500	81,678	1,042	6,221	9,354	0,05	0,416	0,416	568,299	0,094	0,042137931
Trenchers	2000	501	750	Trenchers_2000_750	153,98	1,042	6,221	9,354	0,052	0,416	0,416	568,299	0,094	0,042137931
Trenchers	2005	6	15	Trenchers_2005_15	1,582	0,742	3,469	4,981	0,079	0,35	0,35	568,299	0,066	0,029586207
Trenchers	2005	16	25	Trenchers_2005_25	7,043	0,849	2,519	5,321	0,065	0,333	0,333	568,3	0,076	0,034068966
Trenchers	2005	26	50	Trenchers_2005_50	32,497	3,921	8,33	6,674	0,066	0,849	0,849	568,299	0,353	0,158241379
Trenchers	2005	51	120	Trenchers_2005_120	27,751	1,698	4,526	9,727	0,06	0,839	0,839	568,299	0,153	0,068586207
Trenchers	2005	121	175	Trenchers_2005_175	40,799	1,126	3,695	8,861	0,057	0,487	0,487	568,299	0,101	0,045275862
Trenchers	2005	176	250	Trenchers_2005_250	51,63	0,92	2,668	8,545	0,057	0,379	0,379	568,299	0,083	0,037206897
Trenchers	2005	251	500	Trenchers_2005_500	63,694	0,812	4,395	7,903	0,05	0,332	0,332	568,299	0,073	0,032724138
Trenchers	2005	501	750	Trenchers_2005_750	121,568	0,822	4,387	8,023	0,052	0,333	0,333	568,299	0,074	0,033172414
Trenchers	2010	6	15	Trenchers_2010_15	1,531711	1,287	5,11336	5,52761	0,005	0,509	0,468	586,297	0,171	0,076655172
Trenchers	2010	16	25	Trenchers_2010_25	1,531711	1,287	5,11336	5,52761	0,005	0,509	0,468	586,297	0,171	0,076655172
Trenchers	2010	26	50	Trenchers_2010_50	1,531711	1,287	5,11336	5,52761	0,005	0,509	0,468	586,297	0,171	0,076655172
Trenchers	2010	51	120	Trenchers_2010_120	1,099287	0,924	4,07421	7,99924	0,005	0,62	0,571	529,306	0,154	0,069034483
Trenchers	2010	121	175	Trenchers_2010_175	0,922781	0,775	3,7406	8,65095	0,005	0,441	0,406	519,6876	0,151	0,067689655
Trenchers	2010	176	250	Trenchers_2010_250	0,705197	0,593	2,36576	7,86432	0,005	0,314	0,288	527,3537	0,154	0,069034483
Trenchers	2010	251	500	Trenchers_2010_500	0,380701	0,32	2,10547	4,85363	0,005	0,176	0,162	523,7828	0,152	0,068137931
Trenchers	2010	501	750	Trenchers_2010_750	0,194919	0,164	1,33412	3,20501	0,005	0,113	0,104	525,788	0,153	0,068586207
Trenchers	2011	6	15	Trenchers_2011_15	1,520162	1,277	5,14932	5,52336	0,005	0,507	0,467	585,033	0,171	0,076655172
Trenchers	2011	16	25	Trenchers_2011_25	1,520162	1,277	5,14932	5,52336	0,005	0,507	0,467	585,033	0,171	0,076655172
Trenchers	2011	26	50	Trenchers_2011_50	1,520162	1,277	5,14932	5,52336	0,005	0,507	0,467	585,033	0,171	0,076655172
Trenchers	2011	51	120	Trenchers_2011_120	1,045215	0,878	4,02646	7,67483	0,005	0,598	0,55	527,7187	0,154	0,069034483
Trenchers	2011	121	175	Trenchers_2011_175	0,916044	0,77	3,73004	8,56359	0,005	0,438	0,403	518,4008	0,151	0,067689655
Trenchers	2011	176	250	Trenchers_2011_250	0,655301	0,551	2,19702	7,41222	0,005	0,29	0,267	525,9543	0,153	0,068586207
Trenchers	2011	251	500	Trenchers_2011_500	0,372561	0,313	2,04569	4,66474	0,005	0,171	0,158	522,8418	0,153	0,068586207
Trenchers	2011	501	750	Trenchers_2011_750	0,180473	0,152	1,33856	2,67369	0,005	0,097	0,089	525,691	0,153	0,068586207
Trenchers	2012	6	15	Trenchers_2012_15	1,545009	1,298	5,24421	5,53504	0,005	0,512	0,471	583,5639	0,171	0,076655172
Trenchers	2012	16	25	Trenchers_2012_25	1,545009	1,298	5,24421	5,53504	0,005	0,512	0,471	583,5639	0,171	0,076655172
Trenchers	2012	26	50	Trenchers_2012_50	1,545009	1,298	5,24421	5,53504	0,005	0,512	0,471	583,5639	0,171	0,076655172
Trenchers	2012	51	120	Trenchers_2012_120	1,052636	0,885	4,05076	7,69459	0,005	0,604	0,556	526,3562	0,154	0,069034483
Trenchers	2012	121	175	Trenchers_2012_175	0,907539	0,763	3,7162	8,45762	0,005	0,436	0,401	517,1147	0,151	0,067689655
Trenchers	2012	176	250	Trenchers_2012_250	0,662356	0,557	2,20863	7,44867	0,005	0,293	0,27	524,572	0,153	0,068586207
Trenchers	2012	251	500	Trenchers_2012_500	0,369046	0,31	2,03349	4,58546	0,005	0,168	0,155	521,6264	0,153	0,068586207
Trenchers	2012	501	750	Trenchers_2012_750	0,135931	0,114	0,95532	2,04792	0,005	0,069	0,064	524,8533	0,154	0,069034483
Trenchers	2013	6	15	Trenchers_2013_15	1,53809	1,292	5,2883	5,51013	0,005	0,509	0,469	580,7693	0,171	0,076655172
Trenchers	2013	16	25	Trenchers_2013_25	1,53809	1,292	5,2883	5,51013	0,005	0,509	0,469	580,7693	0,171	0,076655172
Trenchers	2013	26	50	Trenchers_2013_50	1,53809	1,292	5,2883	5,51013	0,005	0,509	0,469	580,7693	0,171	0,076655172
Trenchers	2013	51	120	Trenchers_2013_120	1,010936	0,849	4,02389	7,45031	0,005	0,582	0,536	523,4236	0,154	0,069034483
Trenchers	2013	121	175	Trenchers_2013_175	0,916392	0,77	3,73732	8,49431	0,005	0,441	0,406	514,53	0,151	0,067689655
Trenchers	2013	176	250	Trenchers_2013_250	0,626949	0,527	2,13383	7,03951	0,005	0,276	0,254	520,4335	0,153	0,068586207
Trenchers	2013	251	500	Trenchers_2013_500	0,376293	0,316	2,04997	4,60225	0,005	0,17	0,156	519,043	0,153	0,068586207
Trenchers	2013	501	750	Trenchers_2013_750	0,144323	0,121	0,96183	2,05561	0,005	0,07	0,065	522,2778	0,154	0,069034483
Trenchers	2014	6	15	Trenchers_2014_15	1,508934	1,268	5,29329	5,45539	0,005	0,501	0,46	577,7275	0,171	0,076655172
Trenchers	2014	16	25	Trenchers_2014_25	1,508934	1,268	5,29329	5,45539	0,005	0,501	0,46	577,7275	0,171	0,076655172
Trenchers	2014	26	50	Trenchers_2014_50	1,508934	1,268	5,29329	5,45539	0,005	0,501	0,46	577,7275	0,171	0,076655172
Trenchers	2014	51	120	Trenchers_2014_120	0,973633	0,818	3,99876	7,2172	0,005	0,563	0,518	520,7658	0,154	0,069034483
Trenchers	2014	121	175	Trenchers_2014_175	0,824366	0,693	3,66799	7,69921	0,005	0,395	0,364	512,1475	0,151	0,067689655
Trenchers	2014	176	250	Trenchers_2014_250	0,591196	0,497	2,07009	6,48427	0,005	0,258	0,237	517,7188	0,153	0,068586207
Trenchers	2014	251	500	Trenchers_2014_500	0,364023	0,306	2,03515	4,37019	0,005	0,161	0,148	513,7439	0,152	0,068137931
Trenchers	2014	501	750	Trenchers_2014_750	0,140019	0,118	0,96403	1,825	0,005	0,061	0,056	519,6576	0,154	0,069034483
Trenchers	2015	6	15	Trenchers_2015_15	1,498018	1,259	5,32346	5,40567	0,005	0,493	0,454	571,6674	0,171	0,076655172
Trenchers	2015	16	25	Trenchers_2015_25	1,498018	1,259	5,32346	5,40567	0,005	0,493	0,454	571,6674	0,171	0,076655172
Trenchers	2015	26	50	Trenchers_2015_50	1,498018	1,259	5,32346	5,40567	0,005	0,493	0,454	571,6674	0,171	0,076655172
Trenchers	2015	51	120	Trenchers_2015_120	0,972367	0,817	4,01434	7,17857	0,005	0,562	0,517	515,3955	0,154	0,069034483
Trenchers	2015	121	175	Trenchers_2015_175	0,829448	0,697	3,68389	7,67382	0,005	0,396	0,364	506,9434	0,151	0,067689655
Trenchers	2015	176	250	Trenchers_2015_250	0,597101	0,502	2,0797	6,50988	0,005	0,26	0,239	512,4325	0,153	0,068586207
Trenchers	2015	251	500	Trenchers_2015_500	0,370644	0,311	2,05093	4,38344	0,005	0,163	0,15	508,3296	0,152	0,068137931
Trenchers	2015	501	750	Trenchers_2015_750	0,135272	0,114	0,96532	1,62336	0,005	0,053	0,049	514,4002	0,154	0,069034483
Trenchers	2016	6	15	Trenchers_2016_15	1,450442	1,219	5,28497	5,29818	0,005	0,475	0,437	565,9942	0,171	0,076655172
Trenchers	2016	16	25	Trenchers_2016_25	1,450442	1,219	5,28497	5,29818	0,005	0,475	0,437	565,9942	0,171	0,076655172
Trenchers	2016	26	50	Trenchers_2016_50	1,450442	1,219	5,28497	5,29818	0,005	0,475	0,437	565,9942	0,171	0,076655172
Trenchers	2016	51	120	Trenchers_2016_120	0,937737	0,788	3,98822	6,90219	0,005	0,541	0,498	509,9027	0,154	0,069034483
Trenchers	2016	121	175	Trenchers_2016_175	0,693219	0,582	3,50717	6,50303	0,005	0,328	0,302	501,7809	0,151	0,067689655
Trenchers	2016	176	250	Trenchers_2016_250	0,58008	0,487	2,03007	6,31168	0,005	0,251	0,231	507,1448	0,153	0,068586207
Trenchers	2016	251	500	Trenchers_2016_500	0,351818	0,296	1,96649	4,09912	0,005	0,15	0,138	504,4103	0,152	0,068137931
Trenchers	2016	501	750	Trenchers_2016_750	0,142468	0,12	0,97148	1,63008	0,005	0,054	0,05	509,1433	0,154	0,069034483
Trenchers	2017	6	15	Trenchers_2017_15	1,367315	1,149	5,19682	5,16614	0,005	0,449	0,413	557,4601	0,171	0,076655172
Trenchers	2017	16	25	Trenchers_2017_25	1,367315	1,149	5,19682	5,16614	0,005	0,449	0,413	557,4601	0,171	0,076655172
Trenchers	2017	26	50	Trenchers_2017_50	1,367315	1,149	5,19682	5,16614	0,005	0,449	0,413	557,4601	0,171	0,076655172
Trenchers	2017	51	120	Trenchers_2017_120	0,906302	0,762	3,96827	6,67876	0,005	0,523	0,481	501,9916	0,154	0,069034483
Trenchers	2017	121	175	Trenchers_2017_175	0,638299	0,536	3,43391	5,92725	0,005	0,3	0,276	493,7642	0,151	0,067689655

Trenchers	2017	176	250	Trenchers_2017_250	0,577948	0,486	2,03655	6,19428	0,005	0,25	0,23	499,2281	0,153	0,068586207
Trenchers	2017	251	500	Trenchers_2017_500	0,315778	0,265	1,96603	3,44157	0,005	0,129	0,119	497,0197	0,152	0,068137931
Trenchers	2017	501	750	Trenchers_2017_750	0,135465	0,114	0,97168	1,42958	0,005	0,046	0,042	501,1831	0,154	0,069034483
Trenchers	2018	6	15	Trenchers_2018_15	1,236195	1,039	5,01831	4,95997	0,005	0,409	0,377	548,3607	0,171	0,076655172
Trenchers	2018	16	25	Trenchers_2018_25	1,236195	1,039	5,01831	4,95997	0,005	0,409	0,377	548,3607	0,171	0,076655172
Trenchers	2018	26	50	Trenchers_2018_50	1,236195	1,039	5,01831	4,95997	0,005	0,409	0,377	548,3607	0,171	0,076655172
Trenchers	2018	51	120	Trenchers_2018_120	0,78315	0,658	3,85487	5,91527	0,005	0,45	0,414	493,715	0,154	0,069034483
Trenchers	2018	121	175	Trenchers_2018_175	0,559787	0,47	3,33134	5,12742	0,005	0,261	0,24	485,9254	0,151	0,067689655
Trenchers	2018	176	250	Trenchers_2018_250	0,498602	0,419	1,84856	5,29554	0,005	0,212	0,195	491,5649	0,153	0,068586207
Trenchers	2018	251	500	Trenchers_2018_500	0,30464	0,256	1,97444	3,21114	0,005	0,121	0,112	489,6281	0,152	0,068137931
Trenchers	2018	501	750	Trenchers_2018_750	0,111849	0,094	0,96632	1,02523	0,005	0,029	0,026	494,6426	0,154	0,069034483
Trenchers	2019	6	15	Trenchers_2019_15	1,136688	0,955	4,89183	4,78464	0,005	0,377	0,347	539,1037	0,171	0,076655172
Trenchers	2019	16	25	Trenchers_2019_25	1,136688	0,955	4,89183	4,78464	0,005	0,377	0,347	539,1037	0,171	0,076655172
Trenchers	2019	26	50	Trenchers_2019_50	1,136688	0,955	4,89183	4,78464	0,005	0,377	0,347	539,1037	0,171	0,076655172
Trenchers	2019	51	120	Trenchers_2019_120	0,751452	0,631	3,83677	5,69508	0,005	0,431	0,396	485,3635	0,154	0,069034483
Trenchers	2019	121	175	Trenchers_2019_175	0,547248	0,46	3,34151	4,95976	0,005	0,255	0,234	478,1294	0,151	0,067689655
Trenchers	2019	176	250	Trenchers_2019_250	0,481784	0,405	1,81019	5,04653	0,005	0,203	0,187	484,1167	0,153	0,068586207
Trenchers	2019	251	500	Trenchers_2019_500	0,302803	0,254	1,98689	3,12824	0,005	0,118	0,109	482,1648	0,153	0,068586207
Trenchers	2019	501	750	Trenchers_2019_750	0,09296	0,078	0,95644	0,70662	0,005	0,015	0,014	484,5422	0,153	0,068586207
Trenchers	2020	6	15	Trenchers_2020_15	1,076913	0,905	4,8331	4,67651	0,005	0,356	0,328	527,0962	0,17	0,076206897
Trenchers	2020	16	25	Trenchers_2020_25	1,076913	0,905	4,8331	4,67651	0,005	0,356	0,328	527,0962	0,17	0,076206897
Trenchers	2020	26	50	Trenchers_2020_50	1,076913	0,905	4,8331	4,67651	0,005	0,356	0,328	527,0962	0,17	0,076206897
Trenchers	2020	51	120	Trenchers_2020_120	0,726229	0,61	3,83272	5,51952	0,005	0,413	0,38	475,1265	0,154	0,069034483
Trenchers	2020	121	175	Trenchers_2020_175	0,500709	0,421	3,32968	4,46042	0,005	0,228	0,21	467,7348	0,151	0,067689655
Trenchers	2020	176	250	Trenchers_2020_250	0,466499	0,392	1,77405	4,8091	0,005	0,195	0,179	473,5951	0,153	0,068586207
Trenchers	2020	251	500	Trenchers_2020_500	0,276702	0,233	1,85932	2,775	0,005	0,105	0,097	470,6367	0,152	0,068137931
Trenchers	2020	501	750	Trenchers_2020_750	0,083454	0,07	0,95004	0,56006	0,005	0,009	0,008	472,6556	0,153	0,068586207
Trenchers	2021	6	15	Trenchers_2021_15	0,962829	0,809	4,66576	4,45891	0,005	0,313	0,288	527,0165	0,17	0,076206897
Trenchers	2021	16	25	Trenchers_2021_25	0,962829	0,809	4,66576	4,45891	0,005	0,313	0,288	527,0165	0,17	0,076206897
Trenchers	2021	26	50	Trenchers_2021_50	0,962829	0,809	4,66576	4,45891	0,005	0,313	0,288	527,0165	0,17	0,076206897
Trenchers	2021	51	120	Trenchers_2021_120	0,661739	0,556	3,78912	5,10594	0,005	0,371	0,341	475,287	0,154	0,069034483
Trenchers	2021	121	175	Trenchers_2021_175	0,483838	0,407	3,30363	4,27237	0,005	0,219	0,201	467,7343	0,151	0,067689655
Trenchers	2021	176	250	Trenchers_2021_250	0,42408	0,356	1,66826	4,36036	0,005	0,172	0,158	473,8538	0,153	0,068586207
Trenchers	2021	251	500	Trenchers_2021_500	0,263326	0,221	1,86493	2,49105	0,005	0,1	0,092	470,701	0,152	0,068137931
Trenchers	2021	501	750	Trenchers_2021_750	0,078358	0,066	0,94677	0,47513	0,005	0,009	0,008	472,5289	0,153	0,068586207
Trenchers	2022	6	15	Trenchers_2022_15	0,859634	0,722	4,51833	4,26873	0,005	0,275	0,253	527,0258	0,17	0,076206897
Trenchers	2022	16	25	Trenchers_2022_25	0,859634	0,722	4,51833	4,26873	0,005	0,275	0,253	527,0258	0,17	0,076206897
Trenchers	2022	26	50	Trenchers_2022_50	0,859634	0,722	4,51833	4,26873	0,005	0,275	0,253	527,0258	0,17	0,076206897
Trenchers	2022	51	120	Trenchers_2022_120	0,629528	0,529	3,77843	4,91345	0,005	0,348	0,32	475,3262	0,154	0,069034483
Trenchers	2022	121	175	Trenchers_2022_175	0,470645	0,395	3,31289	4,10333	0,005	0,211	0,195	467,7337	0,151	0,067689655
Trenchers	2022	176	250	Trenchers_2022_250	0,398562	0,335	1,66329	3,85292	0,005	0,16	0,148	473,8512	0,153	0,068586207
Trenchers	2022	251	500	Trenchers_2022_500	0,252168	0,212	1,87233	2,21226	0,005	0,094	0,086	470,5845	0,152	0,068137931
Trenchers	2022	501	750	Trenchers_2022_750	0,067683	0,057	0,94489	0,30138	0,005	0,009	0,008	474,2887	0,153	0,068586207
Trenchers	2023	6	15	Trenchers_2023_15	0,763609	0,642	4,30164	3,95873	0,005	0,22	0,202	527,0954	0,17	0,076206897
Trenchers	2023	16	25	Trenchers_2023_25	0,763609	0,642	4,30164	3,95873	0,005	0,22	0,202	527,0954	0,17	0,076206897
Trenchers	2023	26	50	Trenchers_2023_50	0,763609	0,642	4,30164	3,95873	0,005	0,22	0,202	527,0954	0,17	0,076206897
Trenchers	2023	51	120	Trenchers_2023_120	0,599816	0,504	3,76842	4,70045	0,005	0,326	0,3	475,6903	0,154	0,069034483
Trenchers	2023	121	175	Trenchers_2023_175	0,427489	0,359	3,29061	3,65725	0,005	0,185	0,171	467,7332	0,151	0,067689655
Trenchers	2023	176	250	Trenchers_2023_250	0,390278	0,328	1,6386	3,7365	0,005	0,155	0,143	473,8485	0,153	0,068586207
Trenchers	2023	251	500	Trenchers_2023_500	0,236268	0,199	1,72273	2,00504	0,005	0,085	0,078	471,6125	0,153	0,068586207
Trenchers	2023	501	750	Trenchers_2023_750	0,071688	0,06	0,95111	0,30278	0,005	0,009	0,008	474,4705	0,153	0,068586207
Trenchers	2024	6	15	Trenchers_2024_15	0,714783	0,601	4,23326	3,83415	0,005	0,197	0,181	527,0216	0,17	0,076206897
Trenchers	2024	16	25	Trenchers_2024_25	0,714783	0,601	4,23326	3,83415	0,005	0,197	0,181	527,0216	0,17	0,076206897
Trenchers	2024	26	50	Trenchers_2024_50	0,714783	0,601	4,23326	3,83415	0,005	0,197	0,181	527,0216	0,17	0,076206897
Trenchers	2024	51	120	Trenchers_2024_120	0,588274	0,494	3,76854	4,59319	0,005	0,318	0,292	475,6324	0,154	0,069034483
Trenchers	2024	121	175	Trenchers_2024_175	0,432612	0,364	3,31073	3,66715	0,005	0,187	0,172	467,7326	0,151	0,067689655
Trenchers	2024	176	250	Trenchers_2024_250	0,370794	0,312	1,59847	3,48285	0,005	0,145	0,134	473,8455	0,153	0,068586207
Trenchers	2024	251	500	Trenchers_2024_500	0,228039	0,192	1,66789	1,85871	0,005	0,08	0,074	469,9942	0,152	0,068137931
Trenchers	2024	501	750	Trenchers_2024_750	0,076605	0,064	0,95838	0,30435	0,005	0,009	0,008	474,4782	0,153	0,068586207
Trenchers	2025	6	15	Trenchers_2025_15	0,645012	0,542	4,11956	3,65681	0,005	0,163	0,15	527,1603	0,17	0,076206897
Trenchers	2025	16	25	Trenchers_2025_25	0,645012	0,542	4,11956	3,65681	0,005	0,163	0,15	527,1603	0,17	0,076206897
Trenchers	2025	26	50	Trenchers_2025_50	0,645012	0,542	4,11956	3,65681	0,005	0,163	0,15	527,1603	0,17	0,076206897
Trenchers	2025	51	120	Trenchers_2025_120	0,5433	0,457	3,73437	4,279	0,005	0,285	0,262	475,9014	0,154	0,069034483
Trenchers	2025	121	175	Trenchers_2025_175	0,426125	0,358	3,30907	3,54907	0,005	0,179	0,165	467,732	0,151	0,067689655
Trenchers	2025	176	250	Trenchers_2025_250	0,365033	0,307	1,60076	3,31521	0,005	0,144	0,132	473,9168	0,153	0,068586207
Trenchers	2025	251	500	Trenchers_2025_500	0,227307	0,191	1,67595	1,82613	0,005	0,079	0,072	470,4394	0,152	0,068137931
Trenchers	2025	501	750	Trenchers_2025_750	0,079299	0,067	0,96233	0,30526	0,005	0,009	0,008	474,4863	0,153	0,068586207
Trenchers	2030	6	15	Trenchers_2030_15	1,409	0,661	3,469	4,142	0,008	0,161	0,161	568,299	0,059	0,026448276
Trenchers	2030	16	25	Trenchers_2030_25	5,681	0,685	2,339	4,332	0,007	0,161	0,161	568,299	0,061	0,027344828
Trenchers	2030	26	50	Trenchers_2030_50	7,055	0,851	5,208	3,835	0,007	0,144	0,144	568,299	0,076	0,034068966
Trenchers	2030	51	120	Trenchers_2030_120	6,697	0,409	3,743	2,559	0,006	0,132	0,132	568,299	0,036	0,016137931
Trenchers	2030	121	175	Trenchers_2030_175	10,904	0,3	3,273	1,529	0,006	0,08	0,08	568,3	0,027	0,012103448
Trenchers	2030	176	250	Trenchers_2030_250	14,406	0,256	1,188	1,348	0,006	0,049	0,049	568,3	0,023	0,010310345

Trenchers	2030	251	500	Trenchers_2030_500	19,534	0,249	1,209	1,231	0,005	0,046	0,046	568,299	0,022	0,009862069
Trenchers	2030	501	750	Trenchers_2030_750	36,902	0,249	1,209	1,254	0,005	0,047	0,047	568,299	0,022	0,009862069
Trenchers	2035	6	15	Trenchers_2035_15	1,409	0,661	3,469	4,142	0,008	0,161	0,161	568,299	0,059	0,026448276
Trenchers	2035	16	25	Trenchers_2035_25	5,681	0,685	2,339	4,332	0,007	0,161	0,161	568,299	0,061	0,027344828
Trenchers	2035	26	50	Trenchers_2035_50	5,645	0,681	5,055	3,548	0,007	0,084	0,084	568,299	0,061	0,027344828
Trenchers	2035	51	120	Trenchers_2035_120	5,437	0,332	3,713	2,049	0,006	0,076	0,076	568,3	0,03	0,013448276
Trenchers	2035	121	175	Trenchers_2035_175	8,756	0,241	3,264	0,966	0,006	0,048	0,048	568,299	0,021	0,009413793
Trenchers	2035	176	250	Trenchers_2035_250	12,171	0,216	1,149	0,847	0,006	0,031	0,031	568,299	0,019	0,008517241
Trenchers	2035	251	500	Trenchers_2035_500	16,707	0,213	1,126	0,79	0,005	0,029	0,029	568,299	0,019	0,008517241
Trenchers	2035	501	750	Trenchers_2035_750	31,529	0,213	1,126	0,801	0,005	0,029	0,029	568,3	0,019	0,008517241
Trenchers	2040	6	15	Trenchers_2040_15	1,409	0,661	3,469	4,142	0,008	0,161	0,161	568,299	0,059	0,026448276
Trenchers	2040	16	25	Trenchers_2040_25	5,681	0,685	2,339	4,332	0,007	0,161	0,161	568,299	0,061	0,027344828
Trenchers	2040	26	50	Trenchers_2040_50	4,961	0,598	4,98	3,374	0,007	0,052	0,052	568,299	0,054	0,024206897
Trenchers	2040	51	120	Trenchers_2040_120	4,791	0,293	3,699	1,767	0,006	0,047	0,047	568,299	0,026	0,011655172
Trenchers	2040	121	175	Trenchers_2040_175	7,533	0,207	3,26	0,639	0,006	0,03	0,03	568,3	0,018	0,008068966
Trenchers	2040	176	250	Trenchers_2040_250	10,853	0,193	1,126	0,573	0,006	0,02	0,02	568,3	0,017	0,00762069
Trenchers	2040	251	500	Trenchers_2040_500	15,011	0,191	1,081	0,542	0,005	0,02	0,02	568,3	0,017	0,00762069
Trenchers	2040	501	750	Trenchers_2040_750	28,323	0,191	1,081	0,549	0,005	0,02	0,02	568,299	0,017	0,00762069
Welders	1990	6	15	Welders_1990_15	4,525	1,804	4,999	9,999	1,018	0,974	0,974	568,299	0,162	0,07262069
Welders	1990	16	25	Welders_1990_25	10,092	2,213	4,999	6,919	0,83	0,74	0,74	568,299	0,199	0,089206897
Welders	1990	26	50	Welders_1990_50	40,899	3,899	8,078	7,611	0,846	1,085	1,085	568,3	0,351	0,157344828
Welders	1990	51	120	Welders_1990_120	33,632	2,107	5,312	13,999	0,768	1,146	1,146	568,3	0,19	0,085172414
Welders	1990	121	175	Welders_1990_175	57,219	1,442	4,703	12,598	0,736	0,761	0,761	568,299	0,13	0,058275862
Welders	1990	176	250	Welders_1990_250	69,387	1,442	4,703	12,598	0,736	0,761	0,761	568,299	0,13	0,058275862
Welders	1990	251	500	Welders_1990_500	88,323	1,304	8,704	12,141	0,642	0,672	0,672	568,3	0,117	0,052448276
Welders	2000	6	15	Welders_2000_15	4,323	1,723	4,875	9,08	0,079	0,747	0,747	568,299	0,155	0,069482759
Welders	2000	16	25	Welders_2000_25	9,556	2,095	4,783	6,405	0,065	0,569	0,569	568,299	0,189	0,084724138
Welders	2000	26	50	Welders_2000_50	38,432	3,664	7,708	6,797	0,066	0,803	0,803	568,299	0,33	0,147931034
Welders	2000	51	120	Welders_2000_120	27,201	1,704	4,433	10,046	0,06	0,791	0,791	568,3	0,153	0,068586207
Welders	2000	121	175	Welders_2000_175	45,269	1,14	3,61	9,126	0,057	0,468	0,468	568,299	0,102	0,045724138
Welders	2000	176	250	Welders_2000_250	45,901	0,954	2,869	8,783	0,057	0,384	0,384	568,299	0,086	0,038551724
Welders	2000	251	500	Welders_2000_500	59,514	0,878	4,719	8,466	0,05	0,344	0,344	568,299	0,079	0,035413793
Welders	2005	6	15	Welders_2005_15	3,497	1,394	4,38	7,817	0,079	0,621	0,621	568,299	0,125	0,056034483
Welders	2005	16	25	Welders_2005_25	7,401	1,622	3,922	6,014	0,065	0,483	0,483	568,299	0,146	0,065448276
Welders	2005	26	50	Welders_2005_50	34,243	3,264	7,144	6,342	0,066	0,746	0,746	568,299	0,294	0,131793103
Welders	2005	51	120	Welders_2005_120	23,288	1,459	4,096	8,459	0,06	0,733	0,733	568,299	0,131	0,058724138
Welders	2005	121	175	Welders_2005_175	37,837	0,953	3,26	7,736	0,057	0,405	0,405	568,299	0,086	0,038551724
Welders	2005	176	250	Welders_2005_250	32,839	0,682	1,941	7,302	0,057	0,268	0,268	568,299	0,061	0,027344828
Welders	2005	251	500	Welders_2005_500	41,097	0,606	2,566	6,755	0,05	0,241	0,241	568,299	0,054	0,024206897
Welders	2010	6	15	Welders_2010_15	2,82	1,124	4,027	6,554	0,008	0,473	0,473	568,3	0,101	0,045275862
Welders	2010	16	25	Welders_2010_25	5,78	1,267	3,309	5,477	0,007	0,384	0,384	568,299	0,114	0,051103448
Welders	2010	26	50	Welders_2010_50	27,885	2,658	6,571	5,944	0,007	0,623	0,623	568,299	0,239	0,107137931
Welders	2010	51	120	Welders_2010_120	18,341	1,149	3,928	6,999	0,006	0,61	0,61	568,299	0,103	0,046172414
Welders	2010	121	175	Welders_2010_175	30,26	0,762	3,185	6,255	0,006	0,338	0,338	568,299	0,068	0,030482759
Welders	2010	176	250	Welders_2010_250	23,908	0,496	1,433	5,857	0,006	0,189	0,189	568,299	0,044	0,019724138
Welders	2010	251	500	Welders_2010_500	30,15	0,445	1,621	5,26	0,005	0,174	0,174	568,299	0,04	0,017931034
Welders	2011	6	15	Welders_2011_15	2,677	1,067	3,952	6,283	0,008	0,441	0,441	568,299	0,096	0,043034483
Welders	2011	16	25	Welders_2011_25	5,436	1,192	3,179	5,36	0,007	0,361	0,361	568,3	0,107	0,047965517
Welders	2011	26	50	Welders_2011_50	26,104	2,488	6,392	5,85	0,007	0,593	0,593	568,299	0,224	0,100413793
Welders	2011	51	120	Welders_2011_120	17,199	1,077	3,891	6,632	0,006	0,584	0,584	568,3	0,097	0,043482759
Welders	2011	121	175	Welders_2011_175	28,559	0,719	3,173	5,91	0,006	0,325	0,325	568,299	0,064	0,028689655
Welders	2011	176	250	Welders_2011_250	22,03	0,457	1,34	5,462	0,006	0,17	0,17	568,299	0,041	0,01837931
Welders	2011	251	500	Welders_2011_500	27,869	0,411	1,473	4,886	0,005	0,157	0,157	568,299	0,037	0,016586207
Welders	2012	6	15	Welders_2012_15	2,527	1,007	3,874	5,999	0,008	0,407	0,407	568,299	0,09	0,040344828
Welders	2012	16	25	Welders_2012_25	5,076	1,113	3,043	5,239	0,007	0,337	0,337	568,299	0,1	0,044827586
Welders	2012	26	50	Welders_2012_50	24,122	2,299	6,185	5,749	0,007	0,56	0,56	568,299	0,207	0,092793103
Welders	2012	51	120	Welders_2012_120	15,992	1,001	3,852	6,232	0,006	0,549	0,549	568,299	0,09	0,040344828
Welders	2012	121	175	Welders_2012_175	26,736	0,673	3,161	5,543	0,006	0,303	0,303	568,299	0,06	0,026896552
Welders	2012	176	250	Welders_2012_250	20,583	0,427	1,281	5,087	0,006	0,154	0,154	568,299	0,038	0,017034483
Welders	2012	251	500	Welders_2012_500	26,151	0,386	1,369	4,532	0,005	0,144	0,144	568,299	0,034	0,015241379
Welders	2013	6	15	Welders_2013_15	2,378	0,948	3,796	5,716	0,008	0,373	0,373	568,299	0,085	0,038103448
Welders	2013	16	25	Welders_2013_25	4,718	1,034	2,907	5,117	0,007	0,314	0,314	568,299	0,093	0,041689655
Welders	2013	26	50	Welders_2013_50	22,037	2,101	5,967	5,526	0,007	0,517	0,517	568,299	0,189	0,084724138
Welders	2013	51	120	Welders_2013_120	14,766	0,925	3,813	5,836	0,006	0,507	0,507	568,3	0,083	0,037206897

Welders	2013	121	175	Welders_2013_175	24,884	0,627	3,151	5,195	0,006	0,279	0,279	568,299	0,056	0,025103448
Welders	2013	176	250	Welders_2013_250	19,36	0,402	1,241	4,723	0,006	0,141	0,141	568,299	0,036	0,016137931
Welders	2013	251	500	Welders_2013_500	24,728	0,365	1,291	4,191	0,005	0,131	0,131	568,299	0,032	0,014344828
Welders	2014	6	15	Welders_2014_15	2,237	0,891	3,723	5,445	0,008	0,341	0,341	568,3	0,08	0,035862069
Welders	2014	16	25	Welders_2014_25	4,381	0,96	2,78	5	0,007	0,291	0,291	568,299	0,086	0,038551724
Welders	2014	26	50	Welders_2014_50	19,935	1,9	5,749	5,308	0,007	0,473	0,473	568,3	0,171	0,076655172
Welders	2014	51	120	Welders_2014_120	13,552	0,849	3,774	5,481	0,006	0,464	0,464	568,299	0,076	0,034068966
Welders	2014	121	175	Welders_2014_175	23,067	0,581	3,141	4,862	0,006	0,255	0,255	568,299	0,052	0,023310345
Welders	2014	176	250	Welders_2014_250	18,135	0,376	1,207	4,297	0,006	0,128	0,128	568,299	0,034	0,015241379
Welders	2014	251	500	Welders_2014_500	23,294	0,343	1,227	3,788	0,005	0,119	0,119	568,299	0,031	0,013896552
Welders	2015	6	15	Welders_2015_15	2,109	0,84	3,658	5,196	0,008	0,311	0,311	568,299	0,075	0,03362069
Welders	2015	16	25	Welders_2015_25	4,078	0,894	2,666	4,89	0,007	0,27	0,27	568,299	0,08	0,035862069
Welders	2015	26	50	Welders_2015_50	17,994	1,715	5,562	5,113	0,007	0,43	0,43	568,3	0,154	0,069034483
Welders	2015	51	120	Welders_2015_120	12,337	0,772	3,738	5,077	0,006	0,419	0,419	568,299	0,069	0,030931034
Welders	2015	121	175	Welders_2015_175	21,139	0,532	3,133	4,408	0,006	0,23	0,23	568,299	0,048	0,021517241
Welders	2015	176	250	Welders_2015_250	16,976	0,352	1,178	3,88	0,006	0,116	0,116	568,299	0,031	0,013896552
Welders	2015	251	500	Welders_2015_500	21,953	0,324	1,176	3,398	0,005	0,108	0,108	568,299	0,029	0,013
Welders	2016	6	15	Welders_2016_15	2,03	0,809	3,622	5,023	0,008	0,289	0,289	568,299	0,073	0,032724138
Welders	2016	16	25	Welders_2016_25	3,903	0,855	2,604	4,803	0,007	0,255	0,255	568,299	0,077	0,034517241
Welders	2016	26	50	Welders_2016_50	16,155	1,54	5,395	4,936	0,007	0,389	0,389	568,299	0,138	0,061862069
Welders	2016	51	120	Welders_2016_120	11,165	0,699	3,705	4,692	0,006	0,375	0,375	568,3	0,063	0,028241379
Welders	2016	121	175	Welders_2016_175	19,285	0,486	3,128	3,973	0,006	0,206	0,206	568,299	0,043	0,019275862
Welders	2016	176	250	Welders_2016_250	15,901	0,33	1,153	3,481	0,006	0,104	0,104	568,299	0,029	0,013
Welders	2016	251	500	Welders_2016_500	20,731	0,306	1,134	3,032	0,005	0,097	0,097	568,299	0,027	0,012103448
Welders	2017	6	15	Welders_2017_15	1,973	0,786	3,599	4,887	0,008	0,272	0,272	568,299	0,07	0,03137931
Welders	2017	16	25	Welders_2017_25	3,785	0,83	2,564	4,729	0,007	0,243	0,243	568,299	0,074	0,033172414
Welders	2017	26	50	Welders_2017_50	14,392	1,372	5,239	4,768	0,007	0,35	0,35	568,299	0,123	0,055137931
Welders	2017	51	120	Welders_2017_120	10,06	0,63	3,675	4,328	0,006	0,332	0,332	568,299	0,056	0,025103448
Welders	2017	121	175	Welders_2017_175	17,561	0,442	3,124	3,562	0,006	0,183	0,183	568,299	0,039	0,017482759
Welders	2017	176	250	Welders_2017_250	14,942	0,31	1,133	3,105	0,006	0,094	0,094	568,299	0,028	0,012551724
Welders	2017	251	500	Welders_2017_500	19,705	0,29	1,102	2,713	0,005	0,088	0,088	568,299	0,026	0,011655172
Welders	2018	6	15	Welders_2018_15	1,923	0,766	3,58	4,762	0,008	0,256	0,256	568,3	0,069	0,030931034
Welders	2018	16	25	Welders_2018_25	3,684	0,807	2,531	4,661	0,007	0,232	0,232	568,299	0,072	0,032275862
Welders	2018	26	50	Welders_2018_50	12,698	1,21	5,092	4,607	0,007	0,311	0,311	568,299	0,109	0,048862069
Welders	2018	51	120	Welders_2018_120	9,016	0,564	3,648	3,98	0,006	0,29	0,29	568,299	0,05	0,022413793
Welders	2018	121	175	Welders_2018_175	15,966	0,402	3,123	3,176	0,006	0,162	0,162	568,299	0,036	0,016137931
Welders	2018	176	250	Welders_2018_250	14,068	0,292	1,118	2,751	0,006	0,084	0,084	568,299	0,026	0,011655172
Welders	2018	251	500	Welders_2018_500	18,804	0,277	1,08	2,43	0,005	0,08	0,08	568,299	0,025	0,011206897
Welders	2019	6	15	Welders_2019_15	1,877	0,748	3,562	4,647	0,008	0,241	0,241	568,299	0,067	0,030034483
Welders	2019	16	25	Welders_2019_25	3,592	0,787	2,501	4,596	0,007	0,222	0,222	568,299	0,071	0,031827586
Welders	2019	26	50	Welders_2019_50	11,071	1,055	4,95	4,449	0,007	0,273	0,273	568,299	0,095	0,042586207
Welders	2019	51	120	Welders_2019_120	8,032	0,503	3,623	3,648	0,006	0,25	0,25	568,299	0,045	0,020172414
Welders	2019	121	175	Welders_2019_175	14,693	0,37	3,122	2,832	0,006	0,143	0,143	568,3	0,033	0,014793103
Welders	2019	176	250	Welders_2019_250	13,284	0,276	1,104	2,432	0,006	0,075	0,075	568,299	0,024	0,010758621
Welders	2019	251	500	Welders_2019_500	17,937	0,264	1,065	2,163	0,005	0,072	0,072	568,3	0,023	0,010310345
Welders	2020	6	15	Welders_2020_15	1,835	0,731	3,546	4,542	0,008	0,227	0,227	568,299	0,066	0,029586207
Welders	2020	16	25	Welders_2020_25	3,507	0,769	2,473	4,538	0,007	0,212	0,212	568,299	0,069	0,030931034
Welders	2020	26	50	Welders_2020_50	9,83	0,937	4,84	4,304	0,007	0,238	0,238	568,299	0,084	0,037655172
Welders	2020	51	120	Welders_2020_120	7,278	0,455	3,605	3,351	0,006	0,216	0,216	568,299	0,041	0,01837931
Welders	2020	121	175	Welders_2020_175	13,663	0,344	3,122	2,523	0,006	0,127	0,127	568,299	0,031	0,013896552
Welders	2020	176	250	Welders_2020_250	12,577	0,261	1,093	2,143	0,006	0,066	0,066	568,299	0,023	0,010310345
Welders	2020	251	500	Welders_2020_500	17,094	0,252	1,055	1,91	0,005	0,064	0,064	568,299	0,022	0,009862069
Welders	2021	6	15	Welders_2021_15	1,8	0,717	3,531	4,462	0,008	0,214	0,214	568,299	0,064	0,028689655
Welders	2021	16	25	Welders_2021_25	3,431	0,752	2,446	4,497	0,007	0,201	0,201	568,299	0,067	0,030034483
Welders	2021	26	50	Welders_2021_50	8,704	0,829	4,708	4,133	0,007	0,203	0,203	568,299	0,074	0,033172414
Welders	2021	51	120	Welders_2021_120	6,572	0,411	3,579	3,042	0,006	0,184	0,184	568,299	0,037	0,016586207
Welders	2021	121	175	Welders_2021_175	12,512	0,315	3,112	2,189	0,006	0,11	0,11	568,299	0,028	0,012551724
Welders	2021	176	250	Welders_2021_250	11,711	0,243	1,081	1,836	0,006	0,057	0,057	568,299	0,021	0,009413793
Welders	2021	251	500	Welders_2021_500	15,998	0,236	1,044	1,642	0,005	0,055	0,055	568,299	0,021	0,009413793
Welders	2022	6	15	Welders_2022_15	1,774	0,707	3,519	4,408	0,008	0,203	0,203	568,3	0,063	0,028241379

Welders	2022	16	25	Welders_2022_25	3,374	0,739	2,426	4,47	0,007	0,193	0,193	568,299	0,066	0,029586207
Welders	2022	26	50	Welders_2022_50	7,959	0,758	4,645	4,007	0,007	0,175	0,175	568,299	0,068	0,030482759
Welders	2022	51	120	Welders_2022_120	6,112	0,382	3,57	2,808	0,006	0,16	0,16	568,299	0,034	0,015241379
Welders	2022	121	175	Welders_2022_175	11,714	0,295	3,113	1,935	0,006	0,097	0,097	568,3	0,026	0,011655172
Welders	2022	176	250	Welders_2022_250	11,128	0,231	1,074	1,598	0,006	0,05	0,05	568,299	0,02	0,008965517
Welders	2022	251	500	Welders_2022_500	15,267	0,225	1,038	1,454	0,005	0,049	0,049	568,3	0,02	0,008965517
Welders	2023	6	15	Welders_2023_15	1,751	0,698	3,508	4,359	0,008	0,194	0,194	568,3	0,063	0,028241379
Welders	2023	16	25	Welders_2023_25	3,322	0,728	2,407	4,447	0,007	0,186	0,186	568,299	0,065	0,029137931
Welders	2023	26	50	Welders_2023_50	7,318	0,697	4,596	3,891	0,007	0,151	0,151	568,299	0,062	0,027793103
Welders	2023	51	120	Welders_2023_120	5,713	0,357	3,564	2,599	0,006	0,139	0,139	568,299	0,032	0,014344828
Welders	2023	121	175	Welders_2023_175	11,013	0,277	3,115	1,726	0,006	0,085	0,085	568,299	0,025	0,011206897
Welders	2023	176	250	Welders_2023_250	10,606	0,22	1,071	1,404	0,006	0,044	0,044	568,299	0,019	0,008517241
Welders	2023	251	500	Welders_2023_500	14,602	0,215	1,034	1,289	0,005	0,042	0,042	568,299	0,019	0,008517241
Welders	2024	6	15	Welders_2024_15	1,731	0,69	3,499	4,316	0,008	0,188	0,188	568,299	0,062	0,027793103
Welders	2024	16	25	Welders_2024_25	3,276	0,718	2,39	4,426	0,007	0,181	0,181	568,299	0,064	0,028689655
Welders	2024	26	50	Welders_2024_50	6,78	0,646	4,557	3,782	0,007	0,13	0,13	568,299	0,058	0,026
Welders	2024	51	120	Welders_2024_120	5,366	0,336	3,56	2,43	0,006	0,12	0,12	568,299	0,03	0,013448276
Welders	2024	121	175	Welders_2024_175	10,369	0,261	3,118	1,541	0,006	0,074	0,074	568,299	0,023	0,010310345
Welders	2024	176	250	Welders_2024_250	10,107	0,21	1,068	1,234	0,006	0,038	0,038	568,299	0,018	0,008068966
Welders	2024	251	500	Welders_2024_500	13,957	0,206	1,032	1,135	0,005	0,037	0,037	568,299	0,018	0,008068966
Welders	2025	6	15	Welders_2025_15	1,713	0,683	3,491	4,278	0,008	0,183	0,183	568,3	0,061	0,027344828
Welders	2025	16	25	Welders_2025_25	3,237	0,709	2,376	4,407	0,007	0,177	0,177	568,299	0,064	0,028689655
Welders	2025	26	50	Welders_2025_50	6,315	0,602	4,524	3,676	0,007	0,112	0,112	568,299	0,054	0,024206897
Welders	2025	51	120	Welders_2025_120	5,055	0,316	3,557	2,283	0,006	0,102	0,102	568,299	0,028	0,012551724
Welders	2025	121	175	Welders_2025_175	9,743	0,245	3,121	1,365	0,006	0,063	0,063	568,299	0,022	0,009862069
Welders	2025	176	250	Welders_2025_250	9,621	0,199	1,065	1,075	0,006	0,032	0,032	568,299	0,018	0,008068966
Welders	2025	251	500	Welders_2025_500	13,325	0,196	1,029	0,99	0,005	0,031	0,031	568,299	0,017	0,00762069
Welders	2030	6	15	Welders_2030_15	1,665	0,663	3,47	4,164	0,008	0,166	0,166	568,299	0,059	0,026448276
Welders	2030	16	25	Welders_2030_25	3,133	0,687	2,34	4,347	0,007	0,165	0,165	568,299	0,061	0,027344828
Welders	2030	26	50	Welders_2030_50	4,719	0,449	4,387	3,273	0,007	0,045	0,045	568,299	0,04	0,017931034
Welders	2030	51	120	Welders_2030_120	3,827	0,239	3,535	1,707	0,006	0,04	0,04	568,299	0,021	0,009413793
Welders	2030	121	175	Welders_2030_175	7,011	0,176	3,121	0,628	0,006	0,027	0,027	568,299	0,015	0,006724138
Welders	2030	176	250	Welders_2030_250	7,829	0,162	1,063	0,525	0,006	0,017	0,017	568,299	0,014	0,006275862
Welders	2030	251	500	Welders_2030_500	10,967	0,161	1,027	0,495	0,005	0,017	0,017	568,299	0,014	0,006275862
Welders	2035	6	15	Welders_2035_15	1,659	0,661	3,469	4,143	0,008	0,162	0,162	568,299	0,059	0,026448276
Welders	2035	16	25	Welders_2035_25	3,126	0,685	2,339	4,332	0,007	0,162	0,162	568,299	0,061	0,027344828
Welders	2035	26	50	Welders_2035_50	4,262	0,406	4,349	3,147	0,007	0,022	0,022	568,299	0,036	0,016137931
Welders	2035	51	120	Welders_2035_120	3,418	0,214	3,528	1,509	0,006	0,019	0,019	568,299	0,019	0,008517241
Welders	2035	121	175	Welders_2035_175	6,087	0,153	3,121	0,387	0,006	0,015	0,015	568,299	0,013	0,005827586
Welders	2035	176	250	Welders_2035_250	7,189	0,149	1,063	0,343	0,006	0,012	0,012	568,299	0,013	0,005827586
Welders	2035	251	500	Welders_2035_500	10,118	0,149	1,027	0,339	0,005	0,012	0,012	568,299	0,013	0,005827586
Welders	2040	6	15	Welders_2040_15	1,659	0,661	3,469	4,142	0,008	0,161	0,161	568,299	0,059	0,026448276
Welders	2040	16	25	Welders_2040_25	3,126	0,685	2,339	4,332	0,007	0,161	0,161	568,299	0,061	0,027344828
Welders	2040	26	50	Welders_2040_50	4,218	0,402	4,336	3,093	0,007	0,015	0,015	568,3	0,036	0,016137931
Welders	2040	51	120	Welders_2040_120	3,322	0,208	3,524	1,447	0,006	0,014	0,014	568,299	0,018	0,008068966
Welders	2040	121	175	Welders_2040_175	5,753	0,145	3,118	0,303	0,006	0,011	0,011	568,299	0,013	0,005827586
Welders	2040	176	250	Welders_2040_250	6,911	0,143	1,062	0,287	0,006	0,01	0,01	568,3	0,012	0,00537931
Welders	2040	251	500	Welders_2040_500	9,728	0,143	1,026	0,287	0,005	0,01	0,01	568,299	0,012	0,00537931

N_2O calculated based on CH_4/N_2O proportions values from:
https://www.theclimateregistry.org/wp-content/uploads/2018/06/The-Climate-Registry-2018-Default-Emission-Factor-Document.pdf
Table 13.7 U.S. Default Factors for Calculating CH_4 and N_2O Emissions from Non-Highway Vehicles
Construction/Mining Equipment

CH_4 (g/gallon)	N_2O (g/gallon)
0,58	0,26

WPWMA Landfill
GHG Emissions - Electricity Usage
Net Increase in 2050 from 2018 Baseline

Current baseline 2018 with escalation factor x 1.88 = **3 531 870 kWh**

Future Compost Electric Equipment

Equipment / Process Item	Model	Annual Ho	Hours/Yea	Days/Wee	Weeks/Ye	HP	kW	Annual Load
Shredder	Komptech 6200 Stat	5	1316	5	52	375	281	370078
Trommel _Pre-Screen	Vermeer 521	5	1316	5	52	120	90	118425
Sortline	Customized - Electri	5	1316	5	52	40	30	39475
Air Lift Separator	Komptech Hurrikan	5	1316	5	52	75	56	74016
Screening Plant Conveyors	Zipline Conveyor	5	1316	5	52	30	23	29606
Screening Plant Conveyors	Zipline Conveyor	2	520	5	52	30	23	11700
Screening Plant Conveyors	Zipline Conveyor	2	520	5	52	30	23	11700
Radial Stacker	Thor Stacker	4	962	5	52	50	38	36075
Trommel Screen_Finish Screen	Vermeer 521	4	955	5	52	120	90	85950
ASP Blowers	Daniels Model BI	19	6916	7	52	120	90	622440
ASP Blowers	Daniels Model BI	19	6916	7	52	120	90	622440
ASP Blowers	Daniels Model BI	19	6916	7	52	120	90	622440
ASP Blowers	Daniels Model BI	19	6916	7	52	120	90	622440
Building Blowers	Cincinnati	24	8736	7	52	60	45	393120
Building Blowers	Cincinnati	24	8736	7	52	60	45	393120
							KWH	**4053025**
							MWh	**4053,025**

Projected Future Escalation factor x 1.88

KWH	**10 692 900,00**
MWh	**10692,9**

PG&E GHG Intensity

CO2	203,983	lb/MWh
CH4	0,033	lb/MWh
N2O	0,004	lb/MWh

*Based on GHG intensity factors in CalEEMod.2020.4.0 for Pacific Gas and Electric

Summary of Electricity Emissions, Annual

MT/yr			
Total CO2	**CH4**	**N2O**	**CO2e**
989,363	0,160	0,019	998,986

Jacobs

WPWMA Landfill

Summary of Operational Emissions for Compatible Manufacturing

Plan Concept 1 and Plan Concept 2 - Full Buildout Year 2050

Summary of Compatible Manufacturing Emissions, Annual

	tons/yr							MT/yr					
Category	**ROG**	**NOx**	**CO**	**SO_X**	**PM_{10}**	**$PM_{2.5}$**	**dpm**	**Bio-CO2**	**NBio-CO2**	**Total CO2**	**CH4**	**N2O**	**CO2e**
Area	1,335	5,00E-05	5,48E-03	0,00E+00	2,00E-05	2,00E-05	0,00E+00	0,00E+00	0,011	0,011	0,000	0,000	0,011
Energy	0,021	0,192	0,161	0,001	0,015	0,015	0,000	0,000	933,981	933,981	0,037	0,011	938,064
Mobile	0,113	1,188	1,401	0,010	0,988	0,268	0,003	0,000	891,250	891,250	0,020	0,000	891,744
Waste	-	-	-	-	-	-	-	18,878	0,000	18,878	1,116	0,000	46,770
Water	-	-	-	-	-	-	-	19,289	95,707	114,996	1,986	0,048	178,841
Total	1,469	1,380	1,568	0,011	1,003	0,282	0,003	38,167	1 921	1 959	3,158	0,058	2 055

*Compatible manufacturing was modeled in CalEEMod, as 300,000 sq ft of manufacturing buildings and 300,000 sq ft of parking lot area.

Summary of Compatible Manufacturing Emissions, Daily

	lb/day						
Category	**ROG**	**NOx**	**CO**	**SO_X**	**PM_{10}**	**$PM_{2.5}$**	**dpm**
Area	7,317	5,50E-04	6,09E-02	0,00E+00	2,20E-04	2,20E-04	0,00E+00
Energy	0,116	1,053	0,884	0,006	0,080	0,080	0,000
Mobile	0,946	8,116	10,669	0,071	7,154	1,930	0,022
Total	8,4	9,2	11,6	0,1	7,2	2,0	0,0

*Compatible manufacturing was modeled in CalEEMod, as 300,000 sq ft of manufacturing buildings and 300,000 sq ft of parking lot area.

Based on summer daily CalEEMod results.

WPWMA EIR
Summary of Construction Emissions
Plan Concept 1

Summary of Construction Emissions by Year

	Maximum Daily Emissions (lb/day) - across all construction phases									
Year	TOG	ROG	CO	NO_X	SO_X	PM_{10}	$PM_{2.5}$	CO_2	CH_4	dpm
2024	19,784	3,6	72,7	8,9	0,2	5,6	7,6	14 952,512	4,835	0,252
2025	6,395	1,2	50,7	5,3	0,1	5,9	8,0	9 697,393	3,133	0,164
2028	9,301	2,0	76,2	8,7	0,2	3,1	4,2	15 872,857	5,137	0,268
2029	57,451	3,2	128,1	15,1	0,2	3,5	4,2	23 372,301	6,368	0,380
2033	55,136	1,7	42,8	5,3	0,1	1,1	1,3	10 823,029	0,444	0,152
C Mfg 1		2,304	8,250	4,649	0,021	0,536	0,226	1 971,771	0,068	0,044
C Mfg 2		2,304	8,250	4,649	0,021	0,536	0,226	1 971,771	0,068	0,044
C Mfg 3		2,304	8,250	4,649	0,021	0,536	0,226	1 971,771	0,068	0,044
C Mfg 4		2,304	8,250	4,649	0,021	0,536	0,226	1 971,771	0,068	0,044
C Mfg 5		2,304	8,250	4,649	0,021	0,536	0,226	1 971,771	0,068	0,044

*Compatible manufacturing is assumed to be constructed over 5 years, so emissions will occur equally for a 5-year period.

Off-Road and On-Road Emissions by Year

	Maximum Daily Emissions (lb/day) - across all construction phases																			
	Off-Road Emissions (Exhaust and Fugitive)										On-Road Emissions (Exhaust and Fugitive)									
Year	TOG	ROG	CO	NO_X	SO_X	PM_{10}	$PM_{2.5}$	CO_2	CH_4	dpm	TOG	ROG	CO	NO_X	SO_X	PM_{10}	$PM_{2.5}$	CO_2	CH_4	dpm
2024	19,784	3,596	72,662	8,922	0,158	5,596	7,630	14 952,512	4,835	0,252	0,000	0,000	0,000	0,000	0,000	0,000	0,000	0,000	0,000	0,000
2025	6,395	1,227	50,691	5,318	0,102	5,863	8,033	9 697,393	3,133	0,164	0,000	0,000	0,000	0,000	0,000	0,000	0,000	0,000	0,000	0,000
2028	9,301	2,012	76,152	8,719	0,168	3,118	4,203	15 872,857	5,137	0,268	0,000	0,000	0,000	0,000	0,000	0,000	0,000	0,000	0,000	0,000
2029	57,451	3,178	128,144	15,077	0,248	3,509	4,194	23 372,301	6,368	0,380	0,000	0,000	0,000	0,000	0,000	0,000	0,000	0,000	0,000	0,000
2033	55,136	1,667	42,848	5,257	0,099	1,135	1,323	10 823,029	0,444	0,152	0,000	0,000	0,000	0,000	0,000	0,000	0,000	0,000	0,000	0,000

WPWMA EIR

Summary of Construction Emissions

Plan Concept 1

Off-Road Emissions by Element		Maximum Daily Emissions (lb/day) - across all construction phases											
		Exhaust Emissions									Fugitive Emissions (Uncontrolled)		
Element	**Year**	**TOG**	**ROG**	**CO**	**NO_X**	**SO_X**	**PM_{10}**	**$PM_{2.5}$**	**CO_2**	**CH_4**	**PM_{10}**	**$PM_{2.5}$**	**ROG**
Public Area	2024	13,731	0,762	29,822	3,712	0,063	0,102	0,102	6 009,754	1,943	2,850	3,935	1,179
Public Area - SW Pond	2024	2,368	0,461	17,084	1,996	0,038	0,061	0,061	3 638,437	1,177	0,831	1,148	0,000
Western Entrance	2024	1,317	0,211	8,671	1,218	0,018	0,028	0,028	1 665,884	0,538	0,831	1,148	0,524
Shared Site Utilities	2024	2,368	0,461	17,084	1,996	0,038	0,061	0,061	3 638,437	1,177	0,831	1,148	0,000
Compost Facility	2025	3,453	0,762	29,822	3,300	0,063	0,102	0,102	6 008,286	1,943	2,850	3,935	0,000
Compost Facility - SW Pond	2025	2,943	0,466	20,869	2,017	0,039	0,062	0,062	3 689,107	1,190	2,850	3,935	0,000
Landfill Construction	2028	9,301	2,012	76,152	8,719	0,168	0,268	0,268	15 872,857	5,137	2,850	3,935	0,000
Landfill Lining & Partial Closure	2029	41,338	2,483	107,169	10,760	0,214	0,331	0,331	20 221,026	5,473	1,900	2,623	0,000
Recovered Materials Storage	2029	12,809	0,293	13,124	3,712	0,022	0,030	0,030	2 002,154	0,538	0,831	1,148	0,262
HHW Storage	2029	3,303	0,140	7,851	0,605	0,012	0,019	0,019	1 149,120	0,357	0,398	0,043	0,000
Primary Maintenance Facility	2033	13,239	0,211	8,671	1,218	0,021	0,028	0,028	1 994,695	0,087	0,831	1,148	0,524
Stockpile Relocation	2033	41,897	0,932	34,176	4,039	0,078	0,124	0,124	8 828,335	0,357	0,152	0,023	0,000

On-Road Emissions by Element		Maximum Daily Emissions (lb/day) - across all construction phases											
		Exhaust Emissions										Fugitive Emissions	
Element	**Year**	**TOG**	**ROG**	**CO**	**NO_X**	**SO_X**	**PM_{10}**	**$PM_{2.5}$**	**CO_2**	**CH_4**	**N_2O**	**PM_{10}**	**$PM_{2.5}$**
Public Area	2024	0,000	0,000	0,000	0,000	0,000	0,000	0,000	0,000	0,000	0,000	0,000	0,000
Public Area - SW Pond	2024	0,000	0,000	0,000	0,000	0,000	0,000	0,000	0,000	0,000	0,000	0,000	0,000
Western Entrance	2024	0,000	0,000	0,000	0,000	0,000	0,000	0,000	0,000	0,000	0,000	0,000	0,000
Shared Site Utilities	2024	0,000	0,000	0,000	0,000	0,000	0,000	0,000	0,000	0,000	0,000	0,000	0,000
Compost Facility	2025	0,000	0,000	0,000	0,000	0,000	0,000	0,000	0,000	0,000	0,000	0,000	0,000
Compost Facility - SW Pond	2025	0,000	0,000	0,000	0,000	0,000	0,000	0,000	0,000	0,000	0,000	0,000	0,000
Landfill Construction	2028	0,000	0,000	0,000	0,000	0,000	0,000	0,000	0,000	0,000	0,000	0,000	0,000
Landfill Lining & Partial Closure	2029	0,000	0,000	0,000	0,000	0,000	0,000	0,000	0,000	0,000	0,000	0,000	0,000
Recovered Materials Storage	2029	0,000	0,000	0,000	0,000	0,000	0,000	0,000	0,000	0,000	0,000	0,000	0,000
HHW Storage	2029	0,000	0,000	0,000	0,000	0,000	0,000	0,000	0,000	0,000	0,000	0,000	0,000
Primary Maintenance Facility	2033	0,000	0,000	0,000	0,000	0,000	0,000	0,000	0,000	0,000	0,000	0,000	0,000
Stockpile Relocation	2033	0,000	0,000	0,000	0,000	0,000	0,000	0,000	0,000	0,000	0,000	0,000	0,000

WPWMA EIR
Summary of Construction Emissions
Plan Concept 2

Summary of Construction Emissions by Year

	Maximum Daily Emissions (lb/day) - across all construction phases									
Year	TOG	ROG	CO	NO_X	SO_X	PM_{10}	$PM_{2.5}$	CO_2	CH_4	dpm
2024	18,0	3,5	114,5	13,1	0,2	12,5	15,8	23 286,495	7,529	0,393
2026	20,2	3,5	89,3	10,4	0,2	19,9	27,4	18 256,078	5,906	0,308
2031	9,3	2,0	76,2	8,7	0,2	8,8	12,1	15 872,857	5,137	0,268
2032	157,3	3,9	145,2	17,7	0,3	11,0	12,0	31 356,526	1,196	0,441
C Mfg 1		2,304	8,250	4,649	0,021	0,536	0,226	1 971,771	0,068	0,044
C Mfg 2		2,304	8,250	4,649	0,021	0,536	0,226	1 971,771	0,068	0,044
C Mfg 3		2,304	8,250	4,649	0,021	0,536	0,226	1 971,771	0,068	0,044
C Mfg 4		2,304	8,250	4,649	0,021	0,536	0,226	1 971,771	0,068	0,044
C Mfg 5		2,304	8,250	4,649	0,021	0,536	0,226	1 971,771	0,068	0,044

*Compatible manufacturing is assumed to be constructed over 5 years, so emissions will occur equally for a 5-year period.

Off-Road and On-Road Emissions by Year

	Maximum Daily Emissions (lb/day) - across all construction phases																			
	Off-Road Emissions (Exhaust and Fugitive)										On-Road Emissions (Exhaust and Fugitive)									
Year	TOG	ROG	CO	NO_X	SO_X	PM_{10}	$PM_{2.5}$	CO_2	CH_4	dpm	TOG	ROG	CO	NO_X	SO_X	PM_{10}	$PM_{2.5}$	CO_2	CH_4	dpm
2024	18,019	3,474	114,484	13,088	0,246	12,479	15,798	23 286,495	7,529	0,393	0,000	0,000	0,000	0,000	0,000	0,000	0,000	0,000	0,000	0,000
2026	20,212	3,493	89,261	10,437	0,193	19,901	27,360	18 256,078	5,906	0,308	0,000	0,000	0,000	0,000	0,000	0,000	0,000	0,000	0,000	0,000
2031	9,301	2,012	76,152	8,719	0,168	8,818	12,073	15 872,857	5,137	0,268	0,000	0,000	0,000	0,000	0,000	0,000	0,000	0,000	0,000	0,000
2032	157,347	3,905	145,228	17,686	0,304	11,021	12,012	31 356,526	1,196	0,441	0,000	0,000	0,000	0,000	0,000	0,000	0,000	0,000	0,000	0,000

WPWMA EIR

Summary of Construction Emissions

Plan Concept 2

Off-Road Emissions by Element

		Maximum Daily Emissions (lb/day) - across all construction phases											
		Exhaust Emissions									Fugitive Emissions (Uncontrolled)		
Element	**Year**	**TOG**	**ROG**	**CO**	**NO_X**	**SO_X**	**PM_{10}**	**$PM_{2.5}$**	**CO_2**	**CH_4**	**PM_{10}**	**$PM_{2.5}$**	**ROG**
Main Entrance	2024	3,513	0,211	8,671	1,218	0,018	0,028	0,028	1 665,884	0,538	2,494	3,443	0,524
New SW Ponds	2024	3,167	0,466	20,869	2,017	0,039	0,062	0,062	3 688,013	1,190	0,815	0,123	0,000
Unlined Area Excavation (1 of 3)	2024	6,816	1,341	50,768	5,813	0,112	0,179	0,179	10 587,101	3,425	8,549	11,804	0,000
Stockpile Relocation	2024	4,523	0,932	34,176	4,039	0,078	0,124	0,124	7 345,497	2,377	0,228	0,034	0,000
Public Area	2026	12,809	0,762	29,822	3,712	0,063	0,102	0,102	6 008,286	1,943	8,549	11,804	1,179
Public Area - SW Pond	2026	1,202	0,211	8,671	0,913	0,018	0,028	0,028	1 665,887	0,538	2,494	3,443	0,000
Unlined Area Excavation (3 of 3)	2026	6,201	1,341	50,768	5,813	0,112	0,179	0,179	10 581,904	3,425	8,549	11,804	0,000
Landfill Construction	2031	9,301	2,012	76,152	8,719	0,168	0,268	0,268	15 872,857	5,137	8,549	11,804	0,000
Landfill Lining & Partial Closure	2032	118,673	2,483	107,169	10,760	0,226	0,331	0,331	23 519,023	0,856	5,700	7,870	0,000
Admin Building	2032	9,314	0,144	7,851	1,218	0,014	0,019	0,019	1 322,797	0,064	1,193	0,129	0,262
Recovered Materials Storage	2032	13,239	0,293	13,124	3,712	0,024	0,030	0,030	2 152,658	0,096	2,494	3,443	0,262
Shared Site Utilities	2032	16,121	0,461	17,084	1,996	0,040	0,061	0,061	4 362,047	0,178	1,193	0,129	0,000

On-Road Emissions by Element

		Maximum Daily Emissions (lb/day) - across all construction phases											
		Exhaust Emissions										Fugitive Emissions	
Element	**Year**	**TOG**	**ROG**	**CO**	**NO_X**	**SO_X**	**PM_{10}**	**$PM_{2.5}$**	**CO_2**	**CH_4**	**N_2O**	**PM_{10}**	**$PM_{2.5}$**
Main Entrance	2024	0,000	0,000	0,000	0,000	0,000	0,000	0,000	0,000	0,000	0,000	0,000	0,000
New SW Ponds	2024	0,000	0,000	0,000	0,000	0,000	0,000	0,000	0,000	0,000	0,000	0,000	0,000
Unlined Area Excavation (1 of 3)	2024	0,000	0,000	0,000	0,000	0,000	0,000	0,000	0,000	0,000	0,000	0,000	0,000
Stockpile Relocation	2024	0,000	0,000	0,000	0,000	0,000	0,000	0,000	0,000	0,000	0,000	0,000	0,000
Public Area	2026	0,000	0,000	0,000	0,000	0,000	0,000	0,000	0,000	0,000	0,000	0,000	0,000
Public Area - SW Pond	2026	0,000	0,000	0,000	0,000	0,000	0,000	0,000	0,000	0,000	0,000	0,000	0,000
Unlined Area Excavation (3 of 3)	2026	0,000	0,000	0,000	0,000	0,000	0,000	0,000	0,000	0,000	0,000	0,000	0,000
Landfill Construction	2031	0,000	0,000	0,000	0,000	0,000	0,000	0,000	0,000	0,000	0,000	0,000	0,000
Landfill Lining & Partial Closure	2032	0,000	0,000	0,000	0,000	0,000	0,000	0,000	0,000	0,000	0,000	0,000	0,000
Admin Building	2032	0,000	0,000	0,000	0,000	0,000	0,000	0,000	0,000	0,000	0,000	0,000	0,000
Recovered Materials Storage	2032	0,000	0,000	0,000	0,000	0,000	0,000	0,000	0,000	0,000	0,000	0,000	0,000
Shared Site Utilities	2032	0,000	0,000	0,000	0,000	0,000	0,000	0,000	0,000	0,000	0,000	0,000	0,000

WPWMA EIR

Summary of Annual GHG Construction Emissions

Plan Concept 1

Summary of Construction Emissions by Year

				Annual (MT/yr)
Year	**CO_2**	**CH_4**	**N_2O**	**CO_2e**
2024	350	0,08	0,00	353
2025	432	0,14	0,00	436
2028	1 358	0,44	0,00	1 371
2029	1 946	0,51	0,00	1 961
2033	1 181	0,05	0,00	1 182
C Mfg (1 year)*	326	0,01	0	327
Max Annual	**1 946**	**0,51**	**0**	**1 961**

*Compatible manufacturing is assumed to be constructed over 5 years, so emissions will occur equally for a 5-year period.

WPWMA EIR

Summary of Annual GHG Construction Emissions

Plan Concept 2

Summary of Construction Emissions by Year

				Annual (MT/yr)
Year	**CO_2**	**CH_4**	**N_2O**	**CO_2e**
2024	1 500	0,48	0,00	1 514
2026	932	0,27	0,00	939
2031	1 358	0,44	0,00	1 371
2032	2 267	0,09	0,00	2 269
C Mfg (1 year)*	326	0,01	0	327
Max Annual	**2 267**	**0,48**	**0**	**2 269**

*Compatible manufacturing is assumed to be constructed over 5 years, so emissions will occur equally for a 5-year period.

WPWMA EIR
Summary of Construction Phase Information
Plan Concept 1

Number of Equipment

		Number of Equipment Used in Construction Phase									
Element	**Year**	**Demolition**	**Site Preparation**	**Grading**	**Building Construction**	**Paving - Asphalt**	**Paving - Concrete**	**Site Preparation - Pond**	**Excavation**	**Lining and Partial Closure**	**Stockpile Movement**
Public Area	2024	0	7	8	7	8	5	N/A	N/A	N/A	N/A
Public Area - SW Pond	2024	N/A	N/A	N/A	N/A	N/A	N/A	3	4	N/A	N/A
Western Entrance	2024	0	3	3	0	5	7	0	0	N/A	N/A
Shared Site Utilities	2024	0	3	3	0	0	0	0	4	N/A	N/A
Compost Facility	2025	0	7	8	5	0	6	N/A	N/A	N/A	N/A
Compost Facility - SW Pond	2025	N/A	N/A	N/A	N/A	N/A	N/A	7	4	N/A	N/A
Landfill Construction	2028	0	7	8	0	0	0	0	24	N/A	N/A
Landfill Lining & Partial Closure	2029	0	0	0	0	0	0	0	4	44	N/A
Recovered Materials Storage	2029	0	3	3	7	7	5	0	0	N/A	N/A
HHW Storage	2029	0	2	4	5	0	0	0	0	N/A	N/A
Primary Maintenance Facility	2033	0	3	3	5	5	7	0	0	N/A	N/A
Stockpile Relocation	2033	0	0	0	0	0	0	0	0	N/A	5

Daily Equipment-Hours

		Number of Equipment-Hours per Day									
Element	**Year**	**Demolition**	**Site Preparation**	**Grading**	**Building Construction**	**Paving - Asphalt**	**Paving - Concrete**	**Site Preparation - Pond**	**Excavation**	**Lining and Partial Closure**	**Stockpile Movement**
Public Area	2024	0	56	64	50	52	35	N/A	N/A	N/A	N/A
Public Area - SW Pond	2024	N/A	N/A	N/A	N/A	N/A	N/A	23	26	N/A	N/A
Western Entrance	2024	0	23	19	0	35	45	0	0	N/A	N/A
Shared Site Utilities	2024	0	23	19	0	0	0	0	26	N/A	N/A
Compost Facility	2025	0	56	64	32	0	48	N/A	N/A	N/A	N/A
Compost Facility - SW Pond	2025	N/A	N/A	N/A	N/A	N/A	N/A	56	26	N/A	N/A
Landfill Construction	2028	0	56	64	0	0	0	0	120	N/A	N/A
Landfill Lining & Partial Closure	2029	0	0	0	0	0	0	0	26	216	N/A
Recovered Materials Storage	2029	0	23	19	50	45	35	0	0	N/A	N/A
HHW Storage	2029	0	16	21	32	0	0	0	0	N/A	N/A
Primary Maintenance Facility	2033	0	23	19	32	35	45	0	0	N/A	N/A
Stockpile Relocation	2033	0	0	0	0	0	0	0	0	N/A	40

Annual Days Equipment Used

		Number of Days Equipment Used (equivalent to Duration of Construction Phase)									
Element	**Year**	**Demolition**	**Site Preparation**	**Grading**	**Building Construction**	**Paving - Asphalt**	**Paving - Concrete**	**Site Preparation - Pond**	**Excavation**	**Lining and Partial Closure**	**Stockpile Movement**
Public Area	2024	0	10	30	220	20	10	N/A	N/A	N/A	N/A
Public Area - SW Pond	2024	N/A	N/A	N/A	N/A	N/A	N/A	3	1	N/A	N/A
Western Entrance	2024	0	3	6	0	10	10	0	0	N/A	N/A
Shared Site Utilities	2024	0	3	6	0	0	0	0	2	N/A	N/A
Compost Facility	2025	0	30	75	200	0	55	N/A	N/A	N/A	N/A
Compost Facility - SW Pond	2025	N/A	N/A	N/A	N/A	N/A	N/A	10	3	N/A	N/A
Landfill Construction	2028	0	10	30	0	0	0	0	175	N/A	N/A
Landfill Lining & Partial Closure	2029	0	0	0	0	0	0	0	13	175	N/A
Recovered Materials Storage	2029	0	3	6	220	10	10	0	0	N/A	N/A
HHW Storage	2029	0	2	4	200	0	0	0	0	N/A	N/A
Primary Maintenance Facility	2033	0	3	6	200	10	10	0	0	N/A	N/A
Stockpile Relocation	2033	0	0	0	0	0	0	0	0	N/A	260

WPWMA EIR
Summary of Construction Phase Information
Plan Concept 2

Number of Equipment

		Number of Equipment Used in Construction Phase									
Element	**Year**	**Demolition**	**Site Preparation**	**Grading**	**Building Construction**	**Paving - Asphalt**	**Paving - Concrete**	**Site Preparation - Pond**	**Excavation**	**Lining and Partial Closure**	**Stockpile Movement**
Main Entrance	2024	4	3	3	0	5	7	0	0	N/A	N/A
New SW Ponds	2024	0	0	0	0	0	0	7	4	N/A	N/A
Unlined Area Excavation (1 of 3)	2024	0	7	0	0	0	0	0	16	N/A	N/A
Stockpile Relocation	2024	0	0	0	0	0	0	0	0	N/A	5
Public Area	2026	6	7	8	7	8	5	N/A	N/A	N/A	N/A
Public Area - SW Pond	2026	N/A	N/A	N/A	N/A	N/A	N/A	3	4	N/A	N/A
Unlined Area Excavation (3 of 3)	2026	0	7	0	0	0	0	0	16	N/A	N/A
Landfill Construction	2031	0	7	8	0	0	0	0	24	N/A	N/A
Landfill Lining & Partial Closure	2032	0	0	0	0	0	0	0	4	44	N/A
Admin Building	2032	0	2	4	5	7	7	0	0	N/A	N/A
Recovered Materials Storage	2032	0	3	3	7	7	5	0	0	N/A	N/A
Shared Site Utilities	2032	0	2	4	0	0	0	0	4	N/A	N/A

Daily Equipment-Hours

		Number of Equipment-Hours per Day									
Element	**Year**	**Demolition**	**Site Preparation**	**Grading**	**Building Construction**	**Paving - Asphalt**	**Paving - Concrete**	**Site Preparation - Pond**	**Excavation**	**Lining and Partial Closure**	**Stockpile Movement**
Main Entrance	2024	21	23	19	0	35	45	0	0	N/A	N/A
New SW Ponds	2024	0	0	0	0	0	0	56	26	N/A	N/A
Unlined Area Excavation (1 of 3)	2024	0	56	0	0	0	0	0	80	N/A	N/A
Stockpile Relocation	2024	0	0	0	0	0	0	0	0	N/A	40
Public Area	2026	48	56	64	50	52	35	N/A	N/A	N/A	N/A
Public Area - SW Pond	2026	N/A	N/A	N/A	N/A	N/A	N/A	23	26	N/A	N/A
Unlined Area Excavation (3 of 3)	2026	0	56	0	0	0	0	0	80	N/A	N/A
Landfill Construction	2031	0	56	64	0	0	0	0	120	N/A	N/A
Landfill Lining & Partial Closure	2032	0	0	0	0	0	0	0	26	216	N/A
Admin Building	2032	0	16	21	32	45	45	0	0	N/A	N/A
Recovered Materials Storage	2032	0	23	19	50	45	35	0	0	N/A	N/A
Shared Site Utilities	2032	0	16	21	0	0	0	0	26	N/A	N/A

Annual Days Equipment Used

		Number of Days Equipment Used (equivalent to Duration of Construction Phase)									
Element	**Year**	**Demolition**	**Site Preparation**	**Grading**	**Building Construction**	**Paving - Asphalt**	**Paving - Concrete**	**Site Preparation - Pond**	**Excavation**	**Lining and Partial Closure**	**Stockpile Movement**
Main Entrance	2024	20	3	6	0	10	10	0	0	N/A	N/A
New SW Ponds	2024	0	0	0	0	0	0	10	10	N/A	N/A
Unlined Area Excavation (1 of 3)	2024	0	10	0	0	0	0	0	116	N/A	N/A
Stockpile Relocation	2024	0	0	0	0	0	0	0	0	N/A	260
Public Area	2026	20	10	30	220	20	10	N/A	N/A	N/A	N/A
Public Area - SW Pond	2026	N/A	N/A	N/A	N/A	N/A	N/A	3	1	N/A	N/A
Unlined Area Excavation (3 of 3)	2026	0	10	0	0	0	0	0	116	N/A	N/A
Landfill Construction	2031	0	10	30	0	0	0	0	175	N/A	N/A
Landfill Lining & Partial Closure	2032	0	0	0	0	0	0	0	13	175	N/A
Admin Building	2032	0	2	4	200	10	10	0	0	N/A	N/A
Recovered Materials Storage	2032	0	3	6	220	10	10	0	0	N/A	N/A
Shared Site Utilities	2032	0	2	4	0	0	0	0	1	N/A	N/A

WPWMA Construction Project Schedule

Last Updated 20.02.2020

= Critical Element Initial Build
= Necessary Supporting Element
= Existing Feature to be Removed
= Replacement
= Candidate Peak Year

Plan Concept 1 (CEQA Schedule)

Project El	2021												2022												2023												2024												2025												2026												2027												2028											
	J	F	M	A	M	J	J	A	S	O	N	D	J	F	M	A	M	J	J	A	S	O	N	D	J	F	M	A	M	J	J	A	S	O	N	D	J	F	M	A	M	J	J	A	S	O	N	D	J	F	M	A	M	J	J	A	S	O	N	D	J	F	M	A	M	J	J	A	S	O	N	D	J	F	M	A	M	J	J	A	S	O	N	D
Public Area																																					1	1	1	1	1	1	1	1	1	1	1	1																																																			
C&D Facility																		

WPWMA Construction Project Schedule

Last Updated 20.02.2020

= Critical Element Initial Build
= Necessary Supporting Element
= Existing Feature to be Removed
= Replacement
= Candidate Peak Year

Plan Concept 1 (CEQA Schedule)

| Project El | 2029 | | | | | | | | | | | | 2030 | | | | | | | | | | | | 2031 | | | | | | | | | | | | 2032 | | | | | | | | | | | | 2033 | | | | | | | | | | | | 2034 | | | | | | | | | | | | 2035 | | | | | | | | | | | | 2036 | | | | | | | | | | | |
|---|---|---

WPWMA Construction Project Schedule

Last Updated 20.02.2020

= Critical Element Initial Build
= Necessary Supporting Element
= Existing Feature to be Removed
= Replacement
= Candidate Peak Year

Plan Concept 1 (CEQA Schedule)

| Project El | 2037 | | | | | | | | | | | | 2038 | | | | | | | | | | | | 2039 | | | | | | | | | | | | 2040 | | | | | | | | | | | | 2041 | | | | | | | | | | | | 2042 | | | | | | | | | | | | 2043 | | | | | | | | | | | | 2044 | | | | | | | | | | | |
|---|---|---

WPWMA Construction Project Schedule

Last Updated 20.02.2020

= Critical Element Initial Build
= Necessary Supporting Element
= Existing Feature to be Removed
= Replacement
= Candidate Peak Year

Plan Concept 1 (CEQA Schedule)

Project El	2045												2046												2047												2048												2049												2050											
	J	F	M	A	M	J	J	A	S	O	N	D	J	F	M	A	M	J	J	A	S	O	N	D	J	F	M	A	M	J	J	A	S	O	N	D	J	F	M	A	M	J	J	A	S	O	N	D	J	F	M	A	M	J	J	A	S	O	N	D	J	F	M	A	M	J	J	A	S	O	N	D
Public Area																																																1	1	1	1	1	1	1	1	1	1	1																	
C&D Facility																																															1	1	1	1	1	1	1	1	1	1	1																	
Composting																									1	1	1	1	1	1	1	1	1	1	1	1																																										
Landfill - Module Construction																																																																																	
Landfill - Unlined Area Excavation/Backfill													1	1	1	1	1	1	1	1	1	1	1	1	1	1	1	1	1	1	1	1	1	1	1	1	1	1	1	1	1	1	1	1	1	1	1	1	1	1	1	1	1	1	1	1	1	1	1	1	1	1	1	1	1	1	1	1	1	1	1	1
Landfill - Stockpile Relocation																																																																																
Landfill - Module Closure																																																																																
Admin																																																																																
Main Entrance																																																																															
Western Entrance																																																																															
Overpass																																																																															
Recovered Materials Storage																																																1	1	1	1	1	1	1	1	1	1	1																	
Primary Maintenance Facility																																																																															
Satellite Maintenance and Staff Facility													1	1	1	1	1	1	1	1	1	1	1	1																																																											
Stormwater Pond																																																																																
Main Site HHW Facility																																																																																
Compost Pond Removal																																																																															
Site Utilities																																																																															
MRF Upgrade to TS																																																																															
Compatible/Programmatic Facilities																																																																														
Flare																																																																														

Plan Concept 2 (CEQA Schedule)

Project El	2045												2046												2047												2048												2049												2050											
	J	F	M	A	M	J	J	A	S	O	N	D	J	F	M	A	M	J	J	A	S	O	N	D	J	F	M	A	M	J	J	A	S	O	N	D	J	F	M	A	M	J	J	A	S	O	N	D	J	F	M	A	M	J	J	A	S	O	N	D	J	F	M	A	M	J	J	A	S	O	N	D
Public Area													1	1	1	1	1	1	1	1	1	1	1	1																																																															
C&D Facility																									1	1	1	1	1	1	1	1	1	1	1	1																																															
Composting																																					1	1	1	1	1	1	1	1	1	1	1	1																		

Construction Timing Assumptions

Last Updated	12.02.2020

Project Element	**Sub-Element**	**Plan Concept 1 Assumptions**	**Plan Concept 2 Assumptions**
Public Area		- Shift one year to 2024 for more reasonable start date. Public Area will be first to be built - Assume full Public Area built in one year, instead of staggered as in CER schedule	- Must be built after or at tail end of Unlined Area Excavation/Backfill since some of the Public Area will be built on top of old landfill - Assume full Public Area built in one year, instead of staggered as in CER schedule
	Public Area - Roadways		
	Public Area - Buyback (220' x 230')		
	Public Area - HHW (300' x 100')		
	Public Area - Reuse Store Area (155' x 140')		
	Public Area - Tipping Area		
C&D Facility		- Built 2-3 years after Compost per WPWMA - Ask WPWMA how soon we need C&D Area, currently slated for 2030	- Must be built after Unlined Area Excavation/Backfill since majority of C&D Area will be built on top of old landfill - Must be built before Compost because Compost is built over old C&D Area
	C&D - C&D Pad		
	C&D - Processing Line		
Composting		- Built 2 years after Public Area per WPWMA - Compost is built partially in separate events because full Compost Area is not needed given anticipated tonnage growth. Subsequent builds are timed to accommodate predicted tonnage in those years. - Facility dimensions sizing accounts for Compost Option 3 layout even though Option 4 was costed in CER	- Must be built after C&D Area because Compost will be built on top of old C&D Area - Compost is built partially in separate events because full Compost Area is not needed given anticipated tonnage growth. Subsequent builds are timed to accommodate predicted tonnage in those years. - Facility dimensions sizing accounts for Compost Option 3 layout even though Option 4 was costed in CER
	Compost - Green Waste Pad (210' x 225')		
	Compost - Wood Waste Pad (115' x 225')		
	Compost - Outdoor Receiving Area (90' x 200')	Assume receiving building will be built	Assume receiving building will be built
	Compost - Screening and Product Storage Pad (400' x 350')		
	Compost - Temporary Positive ASP System	Assume no more temp ASP system, WPWMA will need to figure out interim compost outside of this project. Temp ASP does not include pad construction, all pad is included in full buildout.	Assume no more temp ASP system, WPWMA will need to figure out interim compost outside of this project. Temp ASP does not include pad construction, all pad is included in full buildout.
	Compost - Active Composting System (205' x 880')		
	Compost - Biofilter (135' x 880')		
	Compost - ASP Curing System (185' x 880')		
	Compost - Dedicated Stormwater Ponds		
	Compost - Miscellaneous Equipment		
Landfill			
	Landfill Construction	- Module 6 will be built in 2023 (not part of Project) - Assume LF module built every 5-10 years, not to coincide with other major construction	- Module 6 will be built in 2023 (not part of Project) - Assume LF module built every 5-10 years, not to coincide with other major construction - Ask Josh/Brenda what year we will start constructing western landfill
	Unlined Area Excavation/Backfill	- Occur over 5 years at tail end of 2050 timeline per WPWMA - Excavation only, no backfill (will be filled with waste as part of landfill construction)	- Occur over 3 years at beginning of 2050 timeline - Let Air team know we need to account for excavation and backfill construction in PC2
	Stockpile Relocation	- One relocation	- Two relocations accomplished in 3 movements (first relocation will be moved in 50% increments, second relocation will be moved in full)
	Closure	- Per WPWMA (2/13/2020), partial closure likely happening year after module excavation. Module lining happens in 2nd year and same crew also does partial closure.	- Per WPWMA (2/13/2020), partial closure likely happening year after module excavation. Module lining happens in 2nd year and same crew also does partial closure.
Admin		- No specific timing for this	- No specific timing for this
	Admin Staff Bldg		
	Admin Staff Parking Lot		
Main Entrance		- No specific timing for this	- Initial retrofit prior to Public Area construction, full buildout after C&D and Compost
	Main Entrance - Roadways		
	Main Entrance - Scale/Building		
Western Entrance		- Built one year before Public Area to allow for construction traffic	- Built prior to construction of new landfill
	Western Entrance - Roadways		
	Western Entrance - Scale/Building		
Overpass		- Not immediately needed, operations can utilize public roadway until overpass gets built	- Built prior to construction of new landfill, assume PC2 has a conveyor and not an overpass
	Overpass		
Recovered Materials Storage		- No specific timing for this	- No specific timing for this
	Recyclables Storage Building		
Primary Maintenance Facility		- No specific timing for this	- No specific timing for this
	Primary Maintenance - Maintenance Area (250' x 300')		
Satellite Maintenance and Staff Facility		- Satellite Maint needed for western property	- Satellite Maint built after Western Entrance and Overpass/Conveyor
	Satellite Maintenance and Staff - Maintenance Area		
	Satellite Maintenance and Staff - Staff Bldg and Parking Area		
Stormwater Pond		- Construct SW ponds in same years as the Public, C&D areas and prior to first LF module	- Construct SW ponds in same years as the Public, C&D areas and prior to first LF module + WPWMA indicates they need one in Year 1 per 2/5/2020 meeting
	New Stormwater Ponds		
Main Site HHW Facility		- No specific timing for this	- No Main Site HHW in PC2
	HHW Building (65' x 75')		
Compost Pond Removal		- Remove compost pond at same time as main entrance construction since it's in same vicinity	- Must be removed prior to Public Area since this space will be utilized by Public Area - After removal, do we need to replace with interim compost pond before Compost Area is built?
	Compost Pond Removal		
Special Permits and Allow (Geotech only)		Assume this is part of operations (not a separate construction event)	Assume this is part of operations (not a separate construction event)
	Geotechnical Investigation		
Wetlands Mitigation		This is a cost, not construction	This is a cost, not construction
	Wetlands Mitigation		
Site Beautification		Assume this is part of operations (not a separate construction event)	Assume this is part of operations (not a separate construction event)
	Facility Beautification		
Site-wide Demolition		Assume this is part of individual elements	Assume this is part of individual elements
	Site-wide Demolition and Disposal		
Site Utilities		- Must be built with Public Area or before	- There is flexibility to construct this, as it is not likely needed until western property construction begins
	Shared Site Utilities		
MRF Upgrade to TS		- Will be kept outside of 2050 timeline	- Will be kept outside of 2050 timeline
	MRF Upgrade to TS		

WPWMA EIR
Construction Emissions - Proposed Project Exhaust Emissions
Plan Concept 1

Assumptions:

Construction Schedule:	4	weeks/month
	5	days/week
	8	hrs/day
Unit Conversion:	453,592	g/lb

= manual input
= max value (conditional formatting)

Additional travel other than equipment operation is minimal and not included in this analysis.
Since construction contractors would be large operators of diesel off-road equipment, all off-road diesel equipment would be compliant with CARB requirements at the time of construction.
After 2020, all off-road diesel construction equipment would meet Tier 4 Final emission standards.

Public Area

Construction Period: 01.01.2024 to
Number of workers: Duration (weeks):

Off Road Equipment Type	Area Size	Number (ea)	Daily Hours	Annual Days Equipment Used
Demolition				
Scraper - CAT 657				
Water Truck - 4000 gal, 3 axle, 58000 gvw				
Site Preparation (15 ac)	***15 ac***	***7***	***56***	***10***
Graders	15	0	0	0
Tractors/Loaders/Backhoes	15	4	8	10
Rubber Tired Dozers	15	3	8	10
Scrapers	15	0	0	0
Grading (15 ac)	***15 ac***	***8***	***64***	***30***
Rubber Tired Dozers	15	1	8	30
Concrete/Industrial Saws	15	0	0	0
Tractors/Loaders/Backhoes	15	2	8	30
Graders	15	1	8	30
Excavators	15	2	8	30
Scrapers	15	2	8	30
Building Construction (2 ac)	***2 ac***	***7***	***50***	***220***
Cranes	2	1	6	220
Forklifts	2	1	6	220
Tractors/Loaders/Backhoes	2	1	6	220
Welders	2	3	8	220
Generator Sets	2	1	8	220
Paving - Asphalt (9 ac)	***9 ac***	***8***	***52***	***20***
Pavers	9	1	8	20
Cement and Mortar Mixers	9	2	6	20
Rollers	9	2	6	20
Tractors/Loaders/Backhoes	9	1	8	20
Paving Equipment	9	2	6	20
Paving - Concrete (2 ac)	***2 ac***	***5***	***35***	***10***
Pavers	2	1	6	10
Cement and Mortar Mixers	2	1	6	10
Rollers	2	1	7	10
Tractors/Loaders/Backhoes	2	1	8	10
Paving Equipment	2	1	8	10
Site Preparation - Pond (2 ac)	***2 ac***	***3***	***23***	***3***
Graders	2	1	8	3
Tractors/Loaders/Backhoes	2	1	8	3
Rubber Tired Dozers	2	1	7	3
Scrapers	2	0	0	0
Excavation (9735 cy)	***9735 cy***	***4***	***26***	***1***
Scrapers	9735	1	8	1
Rubber Tired Dozers	9735	1	8	1
Off-Highway Trucks	9735	1	8	1
Other General Industrial Equipment	9735	1	2	1

Area Size Reference Table	Size	Unit
Site Preparation	15	ac
Grading	15	ac
Building Construction	2	ac
Paving - Asphalt	9	ac
Paving - Concrete	2	ac
Site Preparation - Pond	2	ac
Excavation	9735	cy

WPWMA EIR
Construction Emissions - Proposed Project Exhaust Emissions

Public Area

Emission Factors					Emissions Factor (g/bhp-hr)								
Equipment Type	HorsePower	Load Factor	Construction Year	Year+Equipment Type+HorsePower	CO	NOX	PM10	PM2.5	ROG	TOG	SO2	CO2	CH4
Demolition													
Site Preparation (15 ac)													
Graders													
Tractors/Loaders/Backhoes	97	0,37	2024	2024Tractors/Loaders/Backhoes120	3,70E+00	2,60E-01	8,00E-03	8,00E-03	6,00E-02	2,71E-01	5,00E-03	4,77E+02	1,54E-01
Rubber Tired Dozers	247	0,4	2024	2024Rubber Tired Dozers250	2,20E+00	2,60E-01	8,00E-03	8,00E-03	6,00E-02	4,75E-01	5,00E-03	4,75E+02	1,53E-01
Scrapers													
Grading (15 ac)													
Rubber Tired Dozers	247	0,4	2024	2024Rubber Tired Dozers250	2,20E+00	2,60E-01	8,00E-03	8,00E-03	6,00E-02	4,75E-01	5,00E-03	4,75E+02	1,53E-01
Concrete/Industrial Saws													
Tractors/Loaders/Backhoes	97	0,37	2024	2024Tractors/Loaders/Backhoes120	3,70E+00	2,60E-01	8,00E-03	8,00E-03	6,00E-02	2,71E-01	5,00E-03	4,77E+02	1,54E-01
Graders	187	0,41	2024	2024Graders250	2,20E+00	2,60E-01	8,00E-03	8,00E-03	6,00E-02	3,12E-01	5,00E-03	4,74E+02	1,53E-01
Excavators	158	0,38	2024	2024Excavators175	2,20E+00	2,60E-01	8,00E-03	8,00E-03	6,00E-02	2,03E-01	5,00E-03	4,72E+02	1,53E-01
Scrapers	367	0,48	2024	2024Scrapers500	2,20E+00	2,60E-01	8,00E-03	8,00E-03	6,00E-02	2,91E-01	5,00E-03	4,73E+02	1,53E-01
Building Construction (2 ac)													
Cranes	231	0,29	2024	2024Cranes250	2,20E+00	2,60E-01	8,00E-03	8,00E-03	6,00E-02	3,34E-01	5,00E-03	4,73E+02	1,53E-01
Forklifts	89	0,2	2024	2024Forklifts120	3,70E+00	2,60E-01	8,00E-03	8,00E-03	6,00E-02	3,57E-01	5,00E-03	4,72E+02	1,53E-01
Tractors/Loaders/Backhoes	97	0,37	2024	2024Tractors/Loaders/Backhoes120	3,70E+00	2,60E-01	8,00E-03	8,00E-03	6,00E-02	2,71E-01	5,00E-03	4,77E+02	1,54E-01
Welders	46	0,45	2024	2024Welders50	4,10E+00	2,75E+00	8,00E-03	8,00E-03	1,20E-01	6,78E+00	7,00E-03	5,68E+02	5,80E-02
Generator Sets	84	0,74	2024	2024Generator Sets120	3,70E+00	2,60E-01	8,00E-03	8,00E-03	6,00E-02	5,29E+00	6,00E-03	5,68E+02	2,30E-02
Paving - Asphalt (9 ac)													
Pavers	130	0,42	2024	2024Pavers175	2,20E+00	2,60E-01	8,00E-03	8,00E-03	6,00E-02	2,27E-01	5,00E-03	4,73E+02	1,53E-01
Cement and Mortar Mixers	9	0,56	2024	2024Cement and Mortar Mixers15	4,10E+00	2,75E+00	8,00E-03	8,00E-03	1,20E-01	1,08E+00	8,00E-03	5,68E+02	5,90E-02
Rollers	80	0,38	2024	2024Rollers120	3,70E+00	2,60E-01	8,00E-03	8,00E-03	6,00E-02	3,23E-01	5,00E-03	4,74E+02	1,53E-01
Tractors/Loaders/Backhoes	97	0,37	2024	2024Tractors/Loaders/Backhoes120	3,70E+00	2,60E-01	8,00E-03	8,00E-03	6,00E-02	2,71E-01	5,00E-03	4,77E+02	1,54E-01
Paving Equipment	132	0,36	2024	2024Paving Equipment175	2,20E+00	2,60E-01	8,00E-03	8,00E-03	6,00E-02	2,34E-01	5,00E-03	4,71E+02	1,52E-01
Paving - Concrete (2 ac)													
Pavers	130	0,42	2024	2024Pavers175	2,20E+00	2,60E-01	8,00E-03	8,00E-03	6,00E-02	2,27E-01	5,00E-03	4,73E+02	1,53E-01
Cement and Mortar Mixers	9	0,56	2024	2024Cement and Mortar Mixers15	4,10E+00	2,75E+00	8,00E-03	8,00E-03	1,20E-01	1,08E+00	8,00E-03	5,68E+02	5,90E-02
Rollers	80	0,38	2024	2024Rollers120	3,70E+00	2,60E-01	8,00E-03	8,00E-03	6,00E-02	3,23E-01	5,00E-03	4,74E+02	1,53E-01
Tractors/Loaders/Backhoes	97	0,37	2024	2024Tractors/Loaders/Backhoes120	3,70E+00	2,60E-01	8,00E-03	8,00E-03	6,00E-02	2,71E-01	5,00E-03	4,77E+02	1,54E-01
Paving Equipment	132	0,36	2024	2024Paving Equipment175	2,20E+00	2,60E-01	8,00E-03	8,00E-03	6,00E-02	2,34E-01	5,00E-03	4,71E+02	1,52E-01
Site Preparation - Pond (2 ac)													
Graders	187	0,41	2024	2024Graders250	2,20E+00	2,60E-01	8,00E-03	8,00E-03	6,00E-02	3,12E-01	5,00E-03	4,74E+02	1,53E-01
Tractors/Loaders/Backhoes	97	0,37	2024	2024Tractors/Loaders/Backhoes120	3,70E+00	2,60E-01	8,00E-03	8,00E-03	6,00E-02	2,71E-01	5,00E-03	4,77E+02	1,54E-01
Rubber Tired Dozers	247	0,4	2024	2024Rubber Tired Dozers250	2,20E+00	2,60E-01	8,00E-03	8,00E-03	6,00E-02	4,75E-01	5,00E-03	4,75E+02	1,53E-01
Scrapers													
Excavation (9735 cy)													
Scrapers	367	0,48	2024	2024Scrapers500	2,20E+00	2,60E-01	8,00E-03	8,00E-03	6,00E-02	2,91E-01	5,00E-03	4,73E+02	1,53E-01
Rubber Tired Dozers	247	0,4	2024	2024Rubber Tired Dozers250	2,20E+00	2,60E-01	8,00E-03	8,00E-03	6,00E-02	4,75E-01	5,00E-03	4,75E+02	1,53E-01
Off-Highway Trucks	402	0,38	2024	2024Off-Highway Trucks500	2,20E+00	2,60E-01	8,00E-03	8,00E-03	6,00E-02	2,20E-01	5,00E-03	4,75E+02	1,54E-01
Other General Industrial Equip	88	0,34	2024	2024Other General Industrial Equipmen	3,70E+00	2,60E-01	8,00E-03	8,00E-03	6,00E-02	3,42E-01	5,00E-03	4,70E+02	1,52E-01

WPWMA EIR
Construction Emissions - Proposed Project Exhaust Emissions

Public Area

	Hourly Emissions (lb/hr)									Daily Emissions (lb/day)									Annual Emissions (lb/yr)								
Equipment Type	**TOG**	**ROG**	**CO**	**NOX**	**SO2**	**PM10**	**PM2.5**	**CO2**	**CH4**	**TOG**	**ROG**	**CO**	**NOX**	**SO2**	**PM10**	**PM2.5**	**CO2**	**CH4**	**TOG**	**ROG**	**CO**	**NOX**	**SO2**	**PM10**	**PM2.5**	**CO2**	**CH4**
Demolition																											
Site Preparation (15 ac)																											
Graders																											
Tractors/Loaders/Backhoes	0,086	0,019	1,171	0,082	0,002	0,003	0,003	150,883	0,049	0,685	0,152	9,368	0,658	0,013	0,020	0,020	1 207,068	0,390	6,851	1,519	93,683	6,583	0,127	0,203	0,203	12 070,7	3,899
Rubber Tired Dozers	0,310	0,039	1,438	0,170	0,003	0,005	0,005	310,118	0,100	2,482	0,314	11,501	1,359	0,026	0,042	0,042	2 480,945	0,800	24,816	3,137	115,007	13,592	0,261	0,418	0,418	24 809,5	7,998
Scrapers																											
Grading (15 ac)																											
Rubber Tired Dozers	0,103	0,013	0,479	0,057	0,001	0,002	0,002	103,373	0,033	0,827	0,105	3,834	0,453	0,009	0,014	0,014	826,982	0,267	24,816	3,137	115,007	13,592	0,261	0,418	0,418	24 809,5	7,998
Concrete/Industrial Saws																											
Tractors/Loaders/Backhoes	0,043	0,009	0,586	0,041	0,001	0,001	0,001	75,442	0,024	0,343	0,076	4,684	0,329	0,006	0,010	0,010	603,534	0,195	10,277	2,279	140,524	9,875	0,190	0,304	0,304	18 106,0	5,849
Graders	0,053	0,010	0,372	0,044	0,001	0,001	0,001	80,064	0,026	0,422	0,081	2,975	0,352	0,007	0,011	0,011	640,508	0,207	12,660	2,434	89,247	10,547	0,203	0,325	0,325	19 215,2	6,207
Excavators	0,054	0,016	0,582	0,069	0,001	0,002	0,002	125,066	0,041	0,429	0,127	4,659	0,551	0,011	0,017	0,017	1 000,532	0,324	12,871	3,812	139,778	16,519	0,318	0,508	0,508	30 015,9	9,721
Scrapers	0,226	0,047	1,709	0,202	0,004	0,006	0,006	367,275	0,119	1,809	0,373	13,671	1,616	0,031	0,050	0,050	2 938,199	0,951	54,273	11,185	410,115	48,468	0,932	1,491	1,491	88 146,0	28,522
Building Construction (2 ac)																											
Cranes	0,049	0,009	0,325	0,038	0,001	0,001	0,001	69,851	0,023	0,296	0,053	1,949	0,230	0,004	0,007	0,007	419,106	0,136	65,144	11,697	428,885	50,686	0,975	1,560	1,560	92 203,3	29,827
Forklifts	0,014	0,002	0,145	0,010	0,000	0,000	0,000	18,504	0,006	0,084	0,014	0,871	0,061	0,001	0,002	0,002	111,023	0,036	18,497	3,108	191,659	13,468	0,259	0,414	0,414	24 425,1	7,925
Tractors/Loaders/Backhoes	0,021	0,005	0,293	0,021	0,000	0,001	0,001	37,721	0,012	0,128	0,028	1,757	0,123	0,002	0,004	0,004	226,325	0,073	28,262	6,267	386,441	27,155	0,522	0,836	0,836	49 791,6	16,084
Welders	0,928	0,016	0,561	0,376	0,001	0,001	0,001	77,804	0,008	7,426	0,131	4,491	3,012	0,008	0,009	0,009	622,434	0,064	1 633,686	28,915	987,922	662,631	1,687	1,928	1,928	136 935,4	13,975
Generator Sets	0,725	0,008	0,507	0,036	0,001	0,001	0,001	77,879	0,003	5,796	0,066	4,056	0,285	0,007	0,009	0,009	623,035	0,025	1 275,169	14,471	892,401	62,709	1,447	1,930	1,930	137 067,7	5,547
Paving - Asphalt (9 ac)																											
Pavers	0,027	0,007	0,265	0,031	0,001	0,001	0,001	56,895	0,018	0,219	0,058	2,119	0,250	0,005	0,008	0,008	455,163	0,147	4,370	1,156	42,371	5,007	0,096	0,154	0,154	9 103,3	2,947
Cement and Mortar Mixers	0,024	0,003	0,091	0,061	0,000	0,000	0,000	12,629	0,001	0,143	0,016	0,547	0,367	0,001	0,001	0,001	75,775	0,008	2,867	0,320	10,934	7,333	0,021	0,021	0,021	1 515,5	0,157
Rollers	0,043	0,008	0,496	0,035	0,001	0,001	0,001	63,536	0,021	0,260	0,048	2,976	0,209	0,004	0,006	0,006	381,219	0,123	5,202	0,965	59,514	4,182	0,080	0,129	0,129	7 624,4	2,461
Tractors/Loaders/Backhoes	0,021	0,005	0,293	0,021	0,000	0,001	0,001	37,721	0,012	0,171	0,038	2,342	0,165	0,003	0,005	0,005	301,767	0,097	3,426	0,760	46,841	3,292	0,063	0,101	0,101	6 035,3	1,950
Paving Equipment	0,049	0,013	0,461	0,054	0,001	0,002	0,002	98,617	0,032	0,294	0,075	2,766	0,327	0,006	0,010	0,010	591,699	0,191	5,882	1,509	55,315	6,537	0,126	0,201	0,201	11 834,0	3,822
Paving - Concrete (2 ac)																											
Pavers	0,027	0,007	0,265	0,031	0,001	0,001	0,001	56,895	0,018	0,164	0,043	1,589	0,188	0,004	0,006	0,006	341,372	0,111	1,639	0,433	15,889	1,878	0,036	0,058	0,058	3 413,7	1,105
Cement and Mortar Mixers	0,012	0,001	0,046	0,031	0,000	0,000	0,000	6,315	0,001	0,072	0,008	0,273	0,183	0,001	0,001	0,001	37,887	0,004	0,717	0,080	2,733	1,833	0,005	0,005	0,005	378,9	0,039
Rollers	0,022	0,004	0,248	0,017	0,000	0,001	0,001	31,768	0,010	0,152	0,028	1,736	0,122	0,002	0,004	0,004	222,378	0,072	1,517	0,281	17,358	1,220	0,023	0,038	0,038	2 223,8	0,718
Tractors/Loaders/Backhoes	0,021	0,005	0,293	0,021	0,000	0,001	0,001	37,721	0,012	0,171	0,038	2,342	0,165	0,003	0,005	0,005	301,767	0,097	1,713	0,380	23,421	1,646	0,032	0,051	0,051	3 017,7	0,975
Paving Equipment	0,025	0,006	0,230	0,027	0,001	0,001	0,001	49,308	0,016	0,196	0,050	1,844	0,218	0,004	0,007	0,007	394,466	0,127	1,961	0,503	18,438	2,179	0,042	0,067	0,067	3 944,7	1,274
Site Preparation - Pond (2 ac)																											
Graders	0,053	0,010	0,372	0,044	0,001	0,001	0,001	80,064	0,026	0,422	0,081	2,975	0,352	0,007	0,011	0,011	640,508	0,207	1,266	0,243	8,925	1,055	0,020	0,032	0,032	1 921,5	0,621
Tractors/Loaders/Backhoes	0,021	0,005	0,293	0,021	0,000	0,001	0,001	37,721	0,012	0,171	0,038	2,342	0,165	0,003	0,005	0,005	301,767	0,097	0,514	0,114	7,026	0,494	0,009	0,015	0,015	905,3	0,292
Rubber Tired Dozers	0,103	0,013	0,479	0,057	0,001	0,002	0,002	103,373	0,033	0,724	0,091	3,354	0,396	0,008	0,012	0,012	723,609	0,233	2,171	0,274	10,063	1,189	0,023	0,037	0,037	2 170,8	0,700
Scrapers																											
Excavation (9735 cy)																											
Scrapers	0,113	0,023	0,854	0,101	0,002	0,003	0,003	183,637	0,059	0,905	0,186	6,835	0,808	0,016	0,025	0,025	1 469,099	0,475	0,905	0,186	6,835	0,808	0,016	0,025	0,025	1 469,1	0,475
Rubber Tired Dozers	0,103	0,013	0,479	0,057	0,001	0,002	0,002	103,373	0,033	0,827	0,105	3,834	0,453	0,009	0,014	0,014	826,982	0,267	0,827	0,105	3,834	0,453	0,009	0,014	0,014	827,0	0,267
Off-Highway Trucks	0,074	0,020	0,741	0,088	0,002	0,003	0,003	160,044	0,052	0,591	0,162	5,927	0,700	0,013	0,022	0,022	1 280,352	0,415	0,591	0,162	5,927	0,700	0,013	0,022	0,022	1 280,4	0,415
Other General Industrial Equip	0,023	0,004	0,244	0,017	0,000	0,001	0,001	31,002	0,010	0,045	0,008	0,488	0,034	0,001	0,001	0,001	62,005	0,020	0,045	0,008	0,488	0,034	0,001	0,001	0,001	62,0	0,020
Total per Phase																											
Site Preparation	0,396	0,058	2,609	0,252	0,005	0,008	0,008	461,002	0,149	3,167	0,466	20,869	2,017	0,039	0,062	0,062	3 688,013	1,190	31,667	4,656	208,690	20,175	0,388	0,621	0,621	36 880,1	11,897
Grading	0,479	0,095	3,728	0,413	0,008	0,013	0,013	751,219	0,243	3,830	0,762	29,822	3,300	0,063	0,102	0,102	6 009,754	1,943	114,896	22,846	894,672	99,001	1,904	3,046	3,046	180 292,6	58,296
Building Construction	1,738	0,041	1,831	0,481	0,003	0,004	0,004	281,759	0,052	13,731	0,293	13,124	3,712	0,022	0,030	0,030	2 001,923	0,333	3 020,757	64,458	2 887,309	816,650	4,890	6,667	6,667	440 423,1	73,360
Paving - Asphalt	0,165	0,035	1,606	0,202	0,003	0,005	0,005	269,398	0,084	1,087	0,235	10,749	1,318	0,019	0,030	0,030	1 805,622	0,567	21,747	4,709	214,976	26,352	0,387	0,607	0,607	36 112,4	11,336
Paving - Concrete	0,107	0,024	1,082	0,127	0,002	0,003	0,003	182,007	0,057	0,755	0,168	7,784	0,876	0,014	0,022	0,022	1 297,870	0,411	7,546	1,677	77,840	8,756	0,138	0,218	0,218	12 978,7	4,111
Site Preparation - Pond	0,178	0,028	1,144	0,121	0,002	0,004	0,004	221,157	0,071	1,317	0,211	8,671	0,913	0,018	0,028	0,028	1 665,884	0,538	3,951	0,632	26,014	2,738	0,053	0,084	0,084	4 997,7	1,613
Excavation	0,313	0,061	2,319	0,262	0,005	0,008	0,008	478,056	0,155	2,368	0,461	17,084	1,996	0,038	0,061	0,061	3 638,437	1,177	2,368	0,461	17,084	1,996	0,038	0,061	0,061	3 638,4	1,177
Total																			**3 202,933**	**99,439**	**4 326,585**	**975,667**	**7,798**	**11,304**	**11,304**	**715 323,1**	**161,791**

WPWMA EIR
Construction Emissions - Proposed Project Exhaust Emissions
Plan Concept 1

Western Entrance

Construction Period:	01.01.2024	to		
Number of workers:		Duration (weeks):		

Off Road Equipment Type	Area Size	Number (ea)	Daily Hours	Annual Days Equipment Used
Demolition				
Scraper - CAT 657				
Water Truck - 4000 gal, 3 axle, 58000 gvw				
Site Preparation (2 ac)	***2 ac***	***3***	***23***	***3***
Graders	2	1	8	3
Tractors/Loaders/Backhoes	2	1	8	3
Rubber Tired Dozers	2	1	7	3
Scrapers	2	0	0	0
Grading (2 ac)	***2 ac***	***3***	***19***	***6***
Rubber Tired Dozers	2	1	6	6
Concrete/Industrial Saws	2	0	0	0
Tractors/Loaders/Backhoes	2	1	7	6
Graders	2	1	6	6
Excavators	2	0	0	0
Scrapers	2	0	0	0
Building Construction (0 ac)	***0 ac***	***0***	***0***	***0***
Cranes	0	0	0	0
Forklifts	0	0	0	0
Tractors/Loaders/Backhoes	0	0	0	0
Welders	0	0	0	0
Generator Sets	0	0	0	0
Paving - Asphalt (2 ac)	***2 ac***	***5***	***35***	***10***
Pavers	2	1	6	10
Cement and Mortar Mixers	2	1	6	10
Rollers	2	1	7	10
Tractors/Loaders/Backhoes	2	1	8	10
Paving Equipment	2	1	8	10
Paving - Concrete (1 ac)	***1 ac***	***7***	***45***	***10***
Pavers	1	1	7	10
Cement and Mortar Mixers	1	4	6	10
Rollers	1	1	7	10
Tractors/Loaders/Backhoes	1	1	7	10
Paving Equipment	1	0	0	0
Site Preparation - Pond (0 ac)	***0 ac***	***0***	***0***	***0***
Graders	0	0	0	0
Tractors/Loaders/Backhoes	0	0	0	0
Rubber Tired Dozers	0	0	0	0
Scrapers	0	0	0	0
Excavation (0 cy)	***0 cy***	***0***	***0***	***0***
Scrapers	0	0	0	0
Rubber Tired Dozers	0	0	0	0
Off-Highway Trucks	0	0	0	0
Other General Industrial Equipment	0	0	0	0

Area Size Reference Table	Size	Unit
Site Preparation	2	ac
Grading	2	ac
Building Construction	0	ac
Paving - Asphalt	2	ac
Paving - Concrete	1	ac
Site Preparation - Pond	0	ac
Excavation	0	cy

WPWMA EIR
Construction Emissions - Proposed Project Exhaust Emissions

Western Entrance

Emission Factors					Emissions Factor (g/bhp-hr)								
Equipment Type	HorsePower	Load Factor	Construction Year	Year+Equipment Type+HorsePower	CO	NOX	PM10	PM2.5	ROG	TOG	SO2	CO2	CH4
Demolition													
Site Preparation (2 ac)													
Graders	187	0,41	2024	2024Graders250	2,20E+00	2,60E-01	8,00E-03	8,00E-03	6,00E-02	3,12E-01	5,00E-03	4,74E+02	1,53E-01
Tractors/Loaders/Backhoes	97	0,37	2024	2024Tractors/Loaders/Backhoes120	3,70E+00	2,60E-01	8,00E-03	8,00E-03	6,00E-02	2,71E-01	5,00E-03	4,77E+02	1,54E-01
Rubber Tired Dozers	247	0,4	2024	2024Rubber Tired Dozers250	2,20E+00	2,60E-01	8,00E-03	8,00E-03	6,00E-02	4,75E-01	5,00E-03	4,75E+02	1,53E-01
Scrapers													
Grading (2 ac)													
Rubber Tired Dozers	247	0,4	2024	2024Rubber Tired Dozers250	2,20E+00	2,60E-01	8,00E-03	8,00E-03	6,00E-02	4,75E-01	5,00E-03	4,75E+02	1,53E-01
Concrete/Industrial Saws													
Tractors/Loaders/Backhoes	97	0,37	2024	2024Tractors/Loaders/Backhoes120	3,70E+00	2,60E-01	8,00E-03	8,00E-03	6,00E-02	2,71E-01	5,00E-03	4,77E+02	1,54E-01
Graders	187	0,41	2024	2024Graders250	2,20E+00	2,60E-01	8,00E-03	8,00E-03	6,00E-02	3,12E-01	5,00E-03	4,74E+02	1,53E-01
Excavators													
Scrapers													
Building Construction (0 ac)													
Cranes													
Forklifts													
Tractors/Loaders/Backhoes													
Welders													
Generator Sets													
Paving - Asphalt (2 ac)													
Pavers	130	0,42	2024	2024Pavers175	2,20E+00	2,60E-01	8,00E-03	8,00E-03	6,00E-02	2,27E-01	5,00E-03	4,73E+02	1,53E-01
Cement and Mortar Mixers	9	0,56	2024	2024Cement and Mortar Mixers15	4,10E+00	2,75E+00	8,00E-03	8,00E-03	1,20E-01	1,08E+00	8,00E-03	5,68E+02	5,90E-02
Rollers	80	0,38	2024	2024Rollers120	3,70E+00	2,60E-01	8,00E-03	8,00E-03	6,00E-02	3,23E-01	5,00E-03	4,74E+02	1,53E-01
Tractors/Loaders/Backhoes	97	0,37	2024	2024Tractors/Loaders/Backhoes120	3,70E+00	2,60E-01	8,00E-03	8,00E-03	6,00E-02	2,71E-01	5,00E-03	4,77E+02	1,54E-01
Paving Equipment	132	0,36	2024	2024Paving Equipment175	2,20E+00	2,60E-01	8,00E-03	8,00E-03	6,00E-02	2,34E-01	5,00E-03	4,71E+02	1,52E-01
Paving - Concrete (1 ac)													
Pavers	130	0,42	2024	2024Pavers175	2,20E+00	2,60E-01	8,00E-03	8,00E-03	6,00E-02	2,27E-01	5,00E-03	4,73E+02	1,53E-01
Cement and Mortar Mixers	9	0,56	2024	2024Cement and Mortar Mixers15	4,10E+00	2,75E+00	8,00E-03	8,00E-03	1,20E-01	1,08E+00	8,00E-03	5,68E+02	5,90E-02
Rollers	80	0,38	2024	2024Rollers120	3,70E+00	2,60E-01	8,00E-03	8,00E-03	6,00E-02	3,23E-01	5,00E-03	4,74E+02	1,53E-01
Tractors/Loaders/Backhoes	97	0,37	2024	2024Tractors/Loaders/Backhoes120	3,70E+00	2,60E-01	8,00E-03	8,00E-03	6,00E-02	2,71E-01	5,00E-03	4,77E+02	1,54E-01
Paving Equipment													
Site Preparation - Pond (0 ac)													
Graders													
Tractors/Loaders/Backhoes													
Rubber Tired Dozers													
Scrapers													
Excavation (0 cy)													
Scrapers													
Rubber Tired Dozers													
Off-Highway Trucks													
Other General Industrial Equip													

WPWMA EIR
Construction Emissions - Proposed Project Exhaust Emissions

Western Entrance

	Hourly Emissions (lb/hr)									Daily Emissions (lb/day)									Annual Emissions (lb/yr)								
Equipment Type	**TOG**	**ROG**	**CO**	**NOX**	**SO2**	**PM10**	**PM2.5**	**CO2**	**CH4**	**TOG**	**ROG**	**CO**	**NOX**	**SO2**	**PM10**	**PM2.5**	**CO2**	**CH4**	**TOG**	**ROG**	**CO**	**NOX**	**SO2**	**PM10**	**PM2.5**	**CO2**	**CH4**
Demolition																											
Site Preparation (2 ac)																											
Graders	0,053	0,010	0,372	0,044	0,001	0,001	0,001	80,064	0,026	0,422	0,081	2,975	0,352	0,007	0,011	0,011	640,508	0,207	1,266	0,243	8,925	1,055	0,020	0,032	0,032	1 921,5	0,621
Tractors/Loaders/Backhoes	0,021	0,005	0,293	0,021	0,000	0,001	0,001	37,721	0,012	0,171	0,038	2,342	0,165	0,003	0,005	0,005	301,767	0,097	0,514	0,114	7,026	0,494	0,009	0,015	0,015	905,3	0,292
Rubber Tired Dozers	0,103	0,013	0,479	0,057	0,001	0,002	0,002	103,373	0,033	0,724	0,091	3,354	0,396	0,008	0,012	0,012	723,609	0,233	2,171	0,274	10,063	1,189	0,023	0,037	0,037	2 170,8	0,700
Scrapers																											
Grading (2 ac)																											
Rubber Tired Dozers	0,103	0,013	0,479	0,057	0,001	0,002	0,002	103,373	0,033	0,620	0,078	2,875	0,340	0,007	0,010	0,010	620,236	0,200	3,722	0,470	17,251	2,039	0,039	0,063	0,063	3 721,4	1,200
Concrete/Industrial Saws																											
Tractors/Loaders/Backhoes	0,021	0,005	0,293	0,021	0,000	0,001	0,001	37,721	0,012	0,150	0,033	2,049	0,144	0,003	0,004	0,004	264,046	0,085	0,899	0,199	12,296	0,864	0,017	0,027	0,027	1 584,3	0,512
Graders	0,053	0,010	0,372	0,044	0,001	0,001	0,001	80,064	0,026	0,316	0,061	2,231	0,264	0,005	0,008	0,008	480,381	0,155	1,899	0,365	13,387	1,582	0,030	0,049	0,049	2 882,3	0,931
Excavators																											
Scrapers																											
Building Construction (0 ac)																											
Cranes																											
Forklifts																											
Tractors/Loaders/Backhoes																											
Welders																											
Generator Sets																											
Paving - Asphalt (2 ac)																											
Pavers	0,027	0,007	0,265	0,031	0,001	0,001	0,001	56,895	0,018	0,164	0,043	1,589	0,188	0,004	0,006	0,006	341,372	0,111	1,639	0,433	15,889	1,878	0,036	0,058	0,058	3 413,7	1,105
Cement and Mortar Mixers	0,012	0,001	0,046	0,031	0,000	0,000	0,000	6,315	0,001	0,072	0,008	0,273	0,183	0,001	0,001	0,001	37,887	0,004	0,717	0,080	2,733	1,833	0,005	0,005	0,005	378,9	0,039
Rollers	0,022	0,004	0,248	0,017	0,000	0,001	0,001	31,768	0,010	0,152	0,028	1,736	0,122	0,002	0,004	0,004	222,378	0,072	1,517	0,281	17,358	1,220	0,023	0,038	0,038	2 223,8	0,718
Tractors/Loaders/Backhoes	0,021	0,005	0,293	0,021	0,000	0,001	0,001	37,721	0,012	0,171	0,038	2,342	0,165	0,003	0,005	0,005	301,767	0,097	1,713	0,380	23,421	1,646	0,032	0,051	0,051	3 017,7	0,975
Paving Equipment	0,025	0,006	0,230	0,027	0,001	0,001	0,001	49,308	0,016	0,196	0,050	1,844	0,218	0,004	0,007	0,007	394,466	0,127	1,961	0,503	18,438	2,179	0,042	0,067	0,067	3 944,7	1,274
Paving - Concrete (1 ac)																											
Pavers	0,027	0,007	0,265	0,031	0,001	0,001	0,001	56,895	0,018	0,191	0,051	1,854	0,219	0,004	0,007	0,007	398,267	0,129	1,912	0,506	18,537	2,191	0,042	0,067	0,067	3 982,7	1,289
Cement and Mortar Mixers	0,048	0,005	0,182	0,122	0,000	0,000	0,000	25,258	0,003	0,287	0,032	1,093	0,733	0,002	0,002	0,002	151,549	0,016	2,867	0,320	10,934	7,333	0,021	0,021	0,021	1 515,5	0,157
Rollers	0,022	0,004	0,248	0,017	0,000	0,001	0,001	31,768	0,010	0,152	0,028	1,736	0,122	0,002	0,004	0,004	222,378	0,072	1,517	0,281	17,358	1,220	0,023	0,038	0,038	2 223,8	0,718
Tractors/Loaders/Backhoes	0,021	0,005	0,293	0,021	0,000	0,001	0,001	37,721	0,012	0,150	0,033	2,049	0,144	0,003	0,004	0,004	264,046	0,085	1,499	0,332	20,493	1,440	0,028	0,044	0,044	2 640,5	0,853
Paving Equipment																											
Site Preparation - Pond (0 ac)																											
Graders																											
Tractors/Loaders/Backhoes																											
Rubber Tired Dozers																											
Scrapers																											
Excavation (0 cy)																											
Scrapers																											
Rubber Tired Dozers																											
Off-Highway Trucks																											
Other General Industrial Equip																											

Total per Phase																											
Site Preparation	0,178	0,028	1,144	0,121	0,002	0,004	0,004	221,157	0,071	1,317	0,211	8,671	0,913	0,018	0,028	0,028	1 665,884	0,538	3,951	0,632	26,014	2,738	0,053	0,084	0,084	4 997,7	1,613
Grading	0,178	0,028	1,144	0,121	0,002	0,004	0,004	221,157	0,071	1,087	0,172	7,156	0,747	0,014	0,023	0,023	1 364,663	0,440	6,521	1,035	42,934	4,485	0,086	0,138	0,138	8 188,0	2,643
Building Construction	0,000	0,000	0,000	0,000	0,000	0,000	0,000	0,000	0,000	0,000	0,000	0,000	0,000	0,000	0,000	0,000	0,000	0,000	0,000	0,000	0,000	0,000	0,000	0,000	0,000	0,0	0,000
Paving - Asphalt	0,107	0,024	1,082	0,127	0,002	0,003	0,003	182,007	0,057	0,755	0,168	7,784	0,876	0,014	0,022	0,022	1 297,870	0,411	7,546	1,677	77,840	8,756	0,138	0,218	0,218	12 978,7	4,111
Paving - Concrete	0,118	0,021	0,988	0,192	0,002	0,002	0,002	151,643	0,043	0,779	0,144	6,732	1,218	0,011	0,017	0,017	1 036,240	0,302	7,795	1,439	67,322	12,184	0,115	0,171	0,171	10 362,4	3,017
Site Preparation - Pond	0,000	0,000	0,000	0,000	0,000	0,000	0,000	0,000	0,000	0,000	0,000	0,000	0,000	0,000	0,000	0,000	0,000	0,000	0,000	0,000	0,000	0,000	0,000	0,000	0,000	0,0	0,000
Excavation	0,000	0,000	0,000	0,000	0,000	0,000	0,000	0,000	0,000	0,000	0,000	0,000	0,000	0,000	0,000	0,000	0,000	0,000	0,000	0,000	0,000	0,000	0,000	0,000	0,000	0,0	0,000
Total																			**25,813**	**4,784**	**214,110**	**28,163**	**0,392**	**0,611**	**0,611**	**36 526,7**	**11,384**

WPWMA EIR
Construction Emissions - Proposed Project Exhaust Emissions
Plan Concept 1

Shared Site Utilities

Construction Period:	01.01.2024	to		
Number of workers:		Duration (weeks):		

Off Road Equipment Type	Area Size	Number (ea)	Daily Hours	Annual Days Equipment Used
Demolition				
Scraper - CAT 657				
Water Truck - 4000 gal, 3 axle, 58000 gvw				
Site Preparation (2 ac)	***2 ac***	***3***	***23***	***3***
Graders	2	1	8	3
Tractors/Loaders/Backhoes	2	1	8	3
Rubber Tired Dozers	2	1	7	3
Scrapers	2	0	0	0
Grading (2 ac)	***2 ac***	***3***	***19***	***6***
Rubber Tired Dozers	2	1	6	6
Concrete/Industrial Saws	2	0	0	0
Tractors/Loaders/Backhoes	2	1	7	6
Graders	2	1	6	6
Excavators	2	0	0	0
Scrapers	2	0	0	0
Building Construction (0 ac)	***0 ac***	***0***	***0***	***0***
Cranes	0	0	0	0
Forklifts	0	0	0	0
Tractors/Loaders/Backhoes	0	0	0	0
Welders	0	0	0	0
Generator Sets	0	0	0	0
Paving - Asphalt (0 ac)	***0 ac***	***0***	***0***	***0***
Pavers	0	0	0	0
Cement and Mortar Mixers	0	0	0	0
Rollers	0	0	0	0
Tractors/Loaders/Backhoes	0	0	0	0
Paving Equipment	0	0	0	0
Paving - Concrete (0 ac)	***0 ac***	***0***	***0***	***0***
Pavers	0	0	0	0
Cement and Mortar Mixers	0	0	0	0
Rollers	0	0	0	0
Tractors/Loaders/Backhoes	0	0	0	0
Paving Equipment	0	0	0	0
Site Preparation - Pond (0 ac)	***0 ac***	***0***	***0***	***0***
Graders	0	0	0	0
Tractors/Loaders/Backhoes	0	0	0	0
Rubber Tired Dozers	0	0	0	0
Scrapers	0	0	0	0
Excavation (16000 cy)	***16000 cy***	***4***	***26***	***2***
Scrapers	16000	1	8	2
Rubber Tired Dozers	16000	1	8	2
Off-Highway Trucks	16000	1	8	2
Other General Industrial Equipment	16000	1	2	2

Area Size Reference Table	Size	Unit
Site Preparation	2	ac
Grading	2	ac
Building Construction	0	ac
Paving - Asphalt	0	ac
Paving - Concrete	0	ac
Site Preparation - Pond	0	ac
Excavation	16 000	cy

WPWMA EIR
Construction Emissions - Proposed Project Exhaust Emissions

Shared Site Utilities

Emission Factors					Emissions Factor (g/bhp-hr)								
Equipment Type	HorsePower	Load Factor	Construction Year	Year+Equipment Type+HorsePower	CO	NOX	PM10	PM2.5	ROG	TOG	SO2	CO2	CH4
Demolition													
Site Preparation (2 ac)													
Graders	187	0,41	2024	2024Graders250	2,20E+00	2,60E-01	8,00E-03	8,00E-03	6,00E-02	3,12E-01	5,00E-03	4,74E+02	1,53E-01
Tractors/Loaders/Backhoes	97	0,37	2024	2024Tractors/Loaders/Backhoes120	3,70E+00	2,60E-01	8,00E-03	8,00E-03	6,00E-02	2,71E-01	5,00E-03	4,77E+02	1,54E-01
Rubber Tired Dozers	247	0,4	2024	2024Rubber Tired Dozers250	2,20E+00	2,60E-01	8,00E-03	8,00E-03	6,00E-02	4,75E-01	5,00E-03	4,75E+02	1,53E-01
Scrapers													
Grading (2 ac)													
Rubber Tired Dozers	247	0,4	2024	2024Rubber Tired Dozers250	2,20E+00	2,60E-01	8,00E-03	8,00E-03	6,00E-02	4,75E-01	5,00E-03	4,75E+02	1,53E-01
Concrete/Industrial Saws													
Tractors/Loaders/Backhoes	97	0,37	2024	2024Tractors/Loaders/Backhoes120	3,70E+00	2,60E-01	8,00E-03	8,00E-03	6,00E-02	2,71E-01	5,00E-03	4,77E+02	1,54E-01
Graders	187	0,41	2024	2024Graders250	2,20E+00	2,60E-01	8,00E-03	8,00E-03	6,00E-02	3,12E-01	5,00E-03	4,74E+02	1,53E-01
Excavators													
Scrapers													
Building Construction (0 ac)													
Cranes													
Forklifts													
Tractors/Loaders/Backhoes													
Welders													
Generator Sets													
Paving - Asphalt (0 ac)													
Pavers													
Cement and Mortar Mixers													
Rollers													
Tractors/Loaders/Backhoes													
Paving Equipment													
Paving - Concrete (0 ac)													
Pavers													
Cement and Mortar Mixers													
Rollers													
Tractors/Loaders/Backhoes													
Paving Equipment													
Site Preparation - Pond (0 ac)													
Graders													
Tractors/Loaders/Backhoes													
Rubber Tired Dozers													
Scrapers													
Excavation (16000 cy)													
Scrapers	367	0,48	2024	2024Scrapers500	2,20E+00	2,60E-01	8,00E-03	8,00E-03	6,00E-02	2,91E-01	5,00E-03	4,73E+02	1,53E-01
Rubber Tired Dozers	247	0,4	2024	2024Rubber Tired Dozers250	2,20E+00	2,60E-01	8,00E-03	8,00E-03	6,00E-02	4,75E-01	5,00E-03	4,75E+02	1,53E-01
Off-Highway Trucks	402	0,38	2024	2024Off-Highway Trucks500	2,20E+00	2,60E-01	8,00E-03	8,00E-03	6,00E-02	2,20E-01	5,00E-03	4,75E+02	1,54E-01
Other General Industrial Equip	88	0,34	2024	2024Other General Industrial Equipmen	3,70E+00	2,60E-01	8,00E-03	8,00E-03	6,00E-02	3,42E-01	5,00E-03	4,70E+02	1,52E-01

WPWMA EIR
Construction Emissions - Proposed Project Exhaust Emissions

Shared Site Utilities

	Hourly Emissions (lb/hr)									Daily Emissions (lb/day)									Annual Emissions (lb/yr)								
Equipment Type	**TOG**	**ROG**	**CO**	**NOX**	**SO2**	**PM10**	**PM2.5**	**CO2**	**CH4**	**TOG**	**ROG**	**CO**	**NOX**	**SO2**	**PM10**	**PM2.5**	**CO2**	**CH4**	**TOG**	**ROG**	**CO**	**NOX**	**SO2**	**PM10**	**PM2.5**	**CO2**	**CH4**
Demolition																											
Site Preparation (2 ac)																											
Graders	0,053	0,010	0,372	0,044	0,001	0,001	0,001	80,064	0,026	0,422	0,081	2,975	0,352	0,007	0,011	0,011	640,508	0,207	1,266	0,243	8,925	1,055	0,020	0,032	0,032	1 921,5	0,621
Tractors/Loaders/Backhoes	0,021	0,005	0,293	0,021	0,000	0,001	0,001	37,721	0,012	0,171	0,038	2,342	0,165	0,003	0,005	0,005	301,767	0,097	0,514	0,114	7,026	0,494	0,009	0,015	0,015	905,3	0,292
Rubber Tired Dozers	0,103	0,013	0,479	0,057	0,001	0,002	0,002	103,373	0,033	0,724	0,091	3,354	0,396	0,008	0,012	0,012	723,609	0,233	2,171	0,274	10,063	1,189	0,023	0,037	0,037	2 170,8	0,700
Scrapers																											
Grading (2 ac)																											
Rubber Tired Dozers	0,103	0,013	0,479	0,057	0,001	0,002	0,002	103,373	0,033	0,620	0,078	2,875	0,340	0,007	0,010	0,010	620,236	0,200	3,722	0,470	17,251	2,039	0,039	0,063	0,063	3 721,4	1,200
Concrete/Industrial Saws																											
Tractors/Loaders/Backhoes	0,021	0,005	0,293	0,021	0,000	0,001	0,001	37,721	0,012	0,150	0,033	2,049	0,144	0,003	0,004	0,004	264,046	0,085	0,899	0,199	12,296	0,864	0,017	0,027	0,027	1 584,3	0,512
Graders	0,053	0,010	0,372	0,044	0,001	0,001	0,001	80,064	0,026	0,316	0,061	2,231	0,264	0,005	0,008	0,008	480,381	0,155	1,899	0,365	13,387	1,582	0,030	0,049	0,049	2 882,3	0,931
Excavators																											
Scrapers																											
Building Construction (0 ac)																											
Cranes																											
Forklifts																											
Tractors/Loaders/Backhoes																											
Welders																											
Generator Sets																											
Paving - Asphalt (0 ac)																											
Pavers																											
Cement and Mortar Mixers																											
Rollers																											
Tractors/Loaders/Backhoes																											
Paving Equipment																											
Paving - Concrete (0 ac)																											
Pavers																											
Cement and Mortar Mixers																											
Rollers																											
Tractors/Loaders/Backhoes																											
Paving Equipment																											
Site Preparation - Pond (0 ac)																											
Graders																											
Tractors/Loaders/Backhoes																											
Rubber Tired Dozers																											
Scrapers																											
Excavation (16000 cy)																											
Scrapers	0,113	0,023	0,854	0,101	0,002	0,003	0,003	183,637	0,059	0,905	0,186	6,835	0,808	0,016	0,025	0,025	1 469,099	0,475	1,809	0,373	13,671	1,616	0,031	0,050	0,050	2 938,2	0,951
Rubber Tired Dozers	0,103	0,013	0,479	0,057	0,001	0,002	0,002	103,373	0,033	0,827	0,105	3,834	0,453	0,009	0,014	0,014	826,982	0,267	1,654	0,209	7,667	0,906	0,017	0,028	0,028	1 654,0	0,533
Off-Highway Trucks	0,074	0,020	0,741	0,088	0,002	0,003	0,003	160,044	0,052	0,591	0,162	5,927	0,700	0,013	0,022	0,022	1 280,352	0,415	1,183	0,323	11,855	1,401	0,027	0,043	0,043	2 560,7	0,830
Other General Industrial Equip	0,023	0,004	0,244	0,017	0,000	0,001	0,001	31,002	0,010	0,045	0,008	0,488	0,034	0,001	0,001	0,001	62,005	0,020	0,090	0,016	0,976	0,069	0,001	0,002	0,002	124,0	0,040
Total per Phase																											
Site Preparation	0,178	0,028	1,144	0,121	0,002	0,004	0,004	221,157	0,071	1,317	0,211	8,671	0,913	0,018	0,028	0,028	1 665,884	0,538	3,951	0,632	26,014	2,738	0,053	0,084	0,084	4 997,7	1,613
Grading	0,178	0,028	1,144	0,121	0,002	0,004	0,004	221,157	0,071	1,087	0,172	7,156	0,747	0,014	0,023	0,023	1 364,663	0,440	6,521	1,035	42,934	4,485	0,086	0,138	0,138	8 188,0	2,643
Building Construction	0,000	0,000	0,000	0,000	0,000	0,000	0,000	0,000	0,000	0,000	0,000	0,000	0,000	0,000	0,000	0,000	0,000	0,000	0,000	0,000	0,000	0,000	0,000	0,000	0,000	0,0	0,000
Paving - Asphalt	0,000	0,000	0,000	0,000	0,000	0,000	0,000	0,000	0,000	0,000	0,000	0,000	0,000	0,000	0,000	0,000	0,000	0,000	0,000	0,000	0,000	0,000	0,000	0,000	0,000	0,0	0,000
Paving - Concrete	0,000	0,000	0,000	0,000	0,000	0,000	0,000	0,000	0,000	0,000	0,000	0,000	0,000	0,000	0,000	0,000	0,000	0,000	0,000	0,000	0,000	0,000	0,000	0,000	0,000	0,0	0,000
Site Preparation - Pond	0,000	0,000	0,000	0,000	0,000	0,000	0,000	0,000	0,000	0,000	0,000	0,000	0,000	0,000	0,000	0,000	0,000	0,000	0,000	0,000	0,000	0,000	0,000	0,000	0,000	0,0	0,000
Excavation	0,313	0,061	2,319	0,262	0,005	0,008	0,008	478,056	0,155	2,368	0,461	17,084	1,996	0,038	0,061	0,061	3 638,437	1,177	4,737	0,921	34,169	3,991	0,077	0,123	0,123	7 276,9	2,354
Total																			**15,208**	**2,588**	**103,117**	**11,214**	**0,216**	**0,345**	**0,345**	**20 462,5**	**6,609**

WPWMA EIR
Construction Emissions - Proposed Project Exhaust Emissions
Plan Concept 1

Compost Facility

Construction Period:	01.01.2025	to		
Number of workers:		Duration (weeks):		

Off Road Equipment Type	Area Size	Number (ea)	Daily Hours	Annual Days Equipment Used
Demolition				
Scraper - CAT 657				
Water Truck - 4000 gal, 3 axle, 58000 gvw				
Site Preparation (35 ac)	***35 ac***	***7***	***56***	***30***
Graders	35	0	0	0
Tractors/Loaders/Backhoes	35	4	8	30
Rubber Tired Dozers	35	3	8	30
Scrapers	35	0	0	0
Grading (35 ac)	***35 ac***	***8***	***64***	***75***
Rubber Tired Dozers	35	1	8	75
Concrete/Industrial Saws	35	0	0	0
Tractors/Loaders/Backhoes	35	2	8	75
Graders	35	1	8	75
Excavators	35	2	8	75
Scrapers	35	2	8	75
Building Construction (1 ac)	***1 ac***	***5***	***32***	***200***
Cranes	1	1	4	200
Forklifts	1	2	6	200
Tractors/Loaders/Backhoes	1	2	8	200
Welders	1	0	0	0
Generator Sets	1	0	0	0
Paving - Asphalt (0 ac)	***0 ac***	***0***	***0***	***0***
Pavers	0	0	0	0
Cement and Mortar Mixers	0	0	0	0
Rollers	0	0	0	0
Tractors/Loaders/Backhoes	0	0	0	0
Paving Equipment	0	0	0	0
Paving - Concrete (35 ac)	***35 ac***	***6***	***48***	***55***
Pavers	35	2	8	55
Cement and Mortar Mixers	35	0	0	0
Rollers	35	2	8	55
Tractors/Loaders/Backhoes	35	0	0	0
Paving Equipment	35	2	8	55
Site Preparation - Pond (5 ac)	***5 ac***	***7***	***56***	***10***
Graders	5	0	0	0
Tractors/Loaders/Backhoes	5	4	8	10
Rubber Tired Dozers	5	3	8	10
Scrapers	5	0	0	0
Excavation (31241 cy)	***31241 cy***	***4***	***26***	***3***
Scrapers	31241	1	8	3
Rubber Tired Dozers	31241	1	8	3
Off-Highway Trucks	31241	1	8	3
Other General Industrial Equipment	31241	1	2	3

Area Size Reference Table	Size	Unit
Site Preparation	35	ac
Grading	35	ac
Building Construction	1	ac
Paving - Asphalt	0	ac
Paving - Concrete	35	ac
Site Preparation - Pond	5	ac
Excavation	31 241	cy

WPWMA EIR
Construction Emissions - Proposed Project Exhaust Emissions

Compost Facility

Emission Factors					Emissions Factor (g/bhp-hr)								
Equipment Type	HorsePower	Load Factor	Construction Year	Year+Equipment Type+HorsePower	CO	NOX	PM10	PM2.5	ROG	TOG	SO2	CO2	CH4
Demolition													
Site Preparation (35 ac)													
Graders													
Tractors/Loaders/Backhoes	97	0,37	2025	2025Tractors/Loaders/Backhoes120	3,70E+00	2,60E-01	8,00E-03	8,00E-03	6,00E-02	2,48E-01	5,00E-03	4,77E+02	1,54E-01
Rubber Tired Dozers	247	0,4	2025	2025Rubber Tired Dozers250	2,20E+00	2,60E-01	8,00E-03	8,00E-03	6,00E-02	4,43E-01	5,00E-03	4,75E+02	1,53E-01
Scrapers													
Grading (35 ac)													
Rubber Tired Dozers	247	0,4	2025	2025Rubber Tired Dozers250	2,20E+00	2,60E-01	8,00E-03	8,00E-03	6,00E-02	4,43E-01	5,00E-03	4,75E+02	1,53E-01
Concrete/Industrial Saws													
Tractors/Loaders/Backhoes	97	0,37	2025	2025Tractors/Loaders/Backhoes120	3,70E+00	2,60E-01	8,00E-03	8,00E-03	6,00E-02	2,48E-01	5,00E-03	4,77E+02	1,54E-01
Graders	187	0,41	2025	2025Graders250	2,20E+00	2,60E-01	8,00E-03	8,00E-03	6,00E-02	2,74E-01	5,00E-03	4,73E+02	1,53E-01
Excavators	158	0,38	2025	2025Excavators175	2,20E+00	2,60E-01	8,00E-03	8,00E-03	6,00E-02	1,88E-01	5,00E-03	4,72E+02	1,53E-01
Scrapers	367	0,48	2025	2025Scrapers500	2,20E+00	2,60E-01	8,00E-03	8,00E-03	6,00E-02	2,57E-01	5,00E-03	4,73E+02	1,53E-01
Building Construction (1 ac)													
Cranes	231	0,29	2025	2025Cranes250	2,20E+00	2,60E-01	8,00E-03	8,00E-03	6,00E-02	3,15E-01	5,00E-03	4,73E+02	1,53E-01
Forklifts	89	0,2	2025	2025Forklifts120	3,70E+00	2,60E-01	8,00E-03	8,00E-03	6,00E-02	3,29E-01	5,00E-03	4,72E+02	1,53E-01
Tractors/Loaders/Backhoes	97	0,37	2025	2025Tractors/Loaders/Backhoes120	3,70E+00	2,60E-01	8,00E-03	8,00E-03	6,00E-02	2,48E-01	5,00E-03	4,77E+02	1,54E-01
Welders													
Generator Sets													
Paving - Asphalt (0 ac)													
Pavers													
Cement and Mortar Mixers													
Rollers													
Tractors/Loaders/Backhoes													
Paving Equipment													
Paving - Concrete (35 ac)													
Pavers	130	0,42	2025	2025Pavers175	2,20E+00	2,60E-01	8,00E-03	8,00E-03	6,00E-02	2,15E-01	5,00E-03	4,72E+02	1,53E-01
Cement and Mortar Mixers													
Rollers	80	0,38	2025	2025Rollers120	3,70E+00	2,60E-01	8,00E-03	8,00E-03	6,00E-02	3,04E-01	5,00E-03	4,74E+02	1,53E-01
Tractors/Loaders/Backhoes													
Paving Equipment	132	0,36	2025	2025Paving Equipment175	2,20E+00	2,60E-01	8,00E-03	8,00E-03	6,00E-02	2,08E-01	5,00E-03	4,70E+02	1,52E-01
Site Preparation - Pond (5 ac)													
Graders													
Tractors/Loaders/Backhoes	97	0,37	2025	2025Tractors/Loaders/Backhoes120	3,70E+00	2,60E-01	8,00E-03	8,00E-03	6,00E-02	2,48E-01	5,00E-03	4,77E+02	1,54E-01
Rubber Tired Dozers	247	0,4	2025	2025Rubber Tired Dozers250	2,20E+00	2,60E-01	8,00E-03	8,00E-03	6,00E-02	4,43E-01	5,00E-03	4,75E+02	1,53E-01
Scrapers													
Excavation (31241 cy)													
Scrapers	367	0,48	2025	2025Scrapers500	2,20E+00	2,60E-01	8,00E-03	8,00E-03	6,00E-02	2,57E-01	5,00E-03	4,73E+02	1,53E-01
Rubber Tired Dozers	247	0,4	2025	2025Rubber Tired Dozers250	2,20E+00	2,60E-01	8,00E-03	8,00E-03	6,00E-02	4,43E-01	5,00E-03	4,75E+02	1,53E-01
Off-Highway Trucks	402	0,38	2025	2025Off-Highway Trucks500	2,20E+00	2,60E-01	8,00E-03	8,00E-03	6,00E-02	2,11E-01	5,00E-03	4,75E+02	1,54E-01
Other General Industrial Equip	88	0,34	2025	2025Other General Industrial Equipmen	3,70E+00	2,60E-01	8,00E-03	8,00E-03	6,00E-02	3,06E-01	5,00E-03	4,70E+02	1,52E-01

WPWMA EIR
Construction Emissions - Proposed Project Exhaust Emissions

Compost Facility

	Hourly Emissions (lb/hr)									Daily Emissions (lb/day)									Annual Emissions (lb/yr)								
Equipment Type	**TOG**	**ROG**	**CO**	**NOX**	**SO2**	**PM10**	**PM2.5**	**CO2**	**CH4**	**TOG**	**ROG**	**CO**	**NOX**	**SO2**	**PM10**	**PM2.5**	**CO2**	**CH4**	**TOG**	**ROG**	**CO**	**NOX**	**SO2**	**PM10**	**PM2.5**	**CO2**	**CH4**
Demolition																											
Site Preparation (35 ac)																											
Graders																											
Tractors/Loaders/Backhoes	0,079	0,019	1,171	0,082	0,002	0,003	0,003	151,028	0,049	0,629	0,152	9,368	0,658	0,013	0,020	0,020	1 208,224	0,390	18,869	4,558	281,048	19,749	0,380	0,608	0,608	36 246,7	11,698
Rubber Tired Dozers	0,289	0,039	1,438	0,170	0,003	0,005	0,005	310,110	0,100	2,314	0,314	11,501	1,359	0,026	0,042	0,042	2 480,882	0,800	69,413	9,410	345,022	40,775	0,784	1,255	1,255	74 426,5	23,995
Scrapers																											
Grading (35 ac)																											
Rubber Tired Dozers	0,096	0,013	0,479	0,057	0,001	0,002	0,002	103,370	0,033	0,771	0,105	3,834	0,453	0,009	0,014	0,014	826,961	0,267	57,844	7,841	287,518	33,979	0,653	1,046	1,046	62 022,1	19,996
Concrete/Industrial Saws																											
Tractors/Loaders/Backhoes	0,039	0,009	0,586	0,041	0,001	0,001	0,001	75,514	0,024	0,314	0,076	4,684	0,329	0,006	0,010	0,010	604,112	0,195	23,586	5,697	351,310	24,687	0,475	0,760	0,760	45 308,4	14,622
Graders	0,046	0,010	0,372	0,044	0,001	0,001	0,001	80,030	0,026	0,370	0,081	2,975	0,352	0,007	0,011	0,011	640,240	0,207	27,767	6,085	223,118	26,368	0,507	0,811	0,811	48 018,0	15,517
Excavators	0,050	0,016	0,582	0,069	0,001	0,002	0,002	125,085	0,041	0,398	0,127	4,659	0,551	0,011	0,017	0,017	1 000,677	0,324	29,832	9,530	349,445	41,298	0,794	1,271	1,271	75 050,8	24,302
Scrapers	0,200	0,047	1,709	0,202	0,004	0,006	0,006	367,037	0,119	1,599	0,373	13,671	1,616	0,031	0,050	0,050	2 936,297	0,951	119,925	27,962	1 025,288	121,170	2,330	3,728	3,728	220 222,2	71,304
Building Construction (1 ac)																											
Cranes	0,047	0,009	0,325	0,038	0,001	0,001	0,001	69,853	0,023	0,186	0,035	1,300	0,154	0,003	0,005	0,005	279,413	0,090	37,227	7,089	259,931	30,719	0,591	0,945	0,945	55 882,7	18,077
Forklifts	0,026	0,005	0,290	0,020	0,000	0,001	0,001	37,008	0,012	0,155	0,028	1,742	0,122	0,002	0,004	0,004	222,046	0,072	31,022	5,651	348,472	24,487	0,471	0,753	0,753	44 409,3	14,410
Tractors/Loaders/Backhoes	0,039	0,009	0,586	0,041	0,001	0,001	0,001	75,514	0,024	0,314	0,076	4,684	0,329	0,006	0,010	0,010	604,112	0,195	62,897	15,192	936,828	65,831	1,266	2,026	2,026	120 822,4	38,992
Welders																											
Generator Sets																											
Paving - Asphalt (0 ac)																											
Pavers																											
Cement and Mortar Mixers																											
Rollers																											
Tractors/Loaders/Backhoes																											
Paving Equipment																											
Paving - Concrete (35 ac)																											
Pavers	0,052	0,014	0,530	0,063	0,001	0,002	0,002	113,748	0,037	0,414	0,116	4,237	0,501	0,010	0,015	0,015	909,987	0,295	22,753	6,356	233,041	27,541	0,530	0,847	0,847	50 049,3	16,207
Cement and Mortar Mixers																											
Rollers	0,041	0,008	0,496	0,035	0,001	0,001	0,001	63,516	0,021	0,326	0,064	3,968	0,279	0,005	0,009	0,009	508,124	0,164	17,929	3,539	218,219	15,334	0,295	0,472	0,472	27 946,8	9,024
Tractors/Loaders/Backhoes																											
Paving Equipment	0,044	0,013	0,461	0,054	0,001	0,002	0,002	98,579	0,032	0,349	0,101	3,688	0,436	0,008	0,013	0,013	788,635	0,255	19,219	5,532	202,823	23,970	0,461	0,738	0,738	43 374,9	14,013
Site Preparation - Pond (5 ac)																											
Graders																											
Tractors/Loaders/Backhoes	0,079	0,019	1,171	0,082	0,002	0,003	0,003	151,028	0,049	0,629	0,152	9,368	0,658	0,013	0,020	0,020	1 208,224	0,390	6,290	1,519	93,683	6,583	0,127	0,203	0,203	12 082,2	3,899
Rubber Tired Dozers	0,289	0,039	1,438	0,170	0,003	0,005	0,005	310,110	0,100	2,314	0,314	11,501	1,359	0,026	0,042	0,042	2 480,882	0,800	23,138	3,137	115,007	13,592	0,261	0,418	0,418	24 808,8	7,998
Scrapers																											
Excavation (31241 cy)																											
Scrapers	0,100	0,023	0,854	0,101	0,002	0,003	0,003	183,519	0,059	0,800	0,186	6,835	0,808	0,016	0,025	0,025	1 468,148	0,475	2,399	0,559	20,506	2,423	0,047	0,075	0,075	4 404,4	1,426
Rubber Tired Dozers	0,096	0,013	0,479	0,057	0,001	0,002	0,002	103,370	0,033	0,771	0,105	3,834	0,453	0,009	0,014	0,014	826,961	0,267	2,314	0,314	11,501	1,359	0,026	0,042	0,042	2 480,9	0,800
Off-Highway Trucks	0,071	0,020	0,741	0,088	0,002	0,003	0,003	159,960	0,052	0,568	0,162	5,927	0,700	0,013	0,022	0,022	1 279,676	0,415	1,705	0,485	17,782	2,101	0,040	0,065	0,065	3 839,0	1,245
Other General Industrial Equip	0,020	0,004	0,244	0,017	0,000	0,001	0,001	31,002	0,010	0,040	0,008	0,488	0,034	0,001	0,001	0,001	62,005	0,020	0,121	0,024	1,464	0,103	0,002	0,003	0,003	186,0	0,060
Total per Phase																											
Site Preparation	0,368	0,058	2,609	0,252	0,005	0,008	0,008	461,138	0,149	2,943	0,466	20,869	2,017	0,039	0,062	0,062	3 689,107	1,190	88,282	13,967	626,070	60,525	1,164	1,862	1,862	110 673,2	35,692
Grading	0,432	0,095	3,728	0,413	0,008	0,013	0,013	751,036	0,243	3,453	0,762	29,822	3,300	0,063	0,102	0,102	6 008,286	1,943	258,954	57,116	2 236,680	247,503	4,760	7,615	7,615	450 621,5	145,741
Building Construction	0,112	0,023	1,201	0,100	0,002	0,003	0,003	182,375	0,059	0,656	0,140	7,726	0,605	0,012	0,019	0,019	1 105,572	0,357	131,146	27,932	1 545,230	121,037	2,328	3,724	3,724	221 114,4	71,479
Paving - Asphalt	0,000	0,000	0,000	0,000	0,000	0,000	0,000	0,000	0,000	0,000	0,000	0,000	0,000	0,000	0,000	0,000	0,000	0,000	0,000	0,000	0,000	0,000	0,000	0,000	0,000	0,0	0,000
Paving - Concrete	0,136	0,035	1,487	0,152	0,003	0,005	0,005	275,843	0,089	1,089	0,280	11,892	1,215	0,023	0,037	0,037	2 206,747	0,714	59,901	15,426	654,083	66,845	1,285	2,057	2,057	121 371,1	39,244
Site Preparation - Pond	0,368	0,058	2,609	0,252	0,005	0,008	0,008	461,138	0,149	2,943	0,466	20,869	2,017	0,039	0,062	0,062	3 689,107	1,190	29,427	4,656	208,690	20,175	0,388	0,621	0,621	36 891,1	11,897
Excavation	0,288	0,061	2,319	0,262	0,005	0,008	0,008	477,850	0,155	2,180	0,461	17,084	1,996	0,038	0,061	0,061	3 636,790	1,177	6,539	1,382	51,253	5,987	0,115	0,184	0,184	10 910,4	3,531
Total																			**574,248**	**120,478**	**5 322,006**	**522,072**	**10,040**	**16,064**	**16,064**	**951 581,6**	**307,584**

WPWMA EIR
Construction Emissions - Proposed Project Exhaust Emissions
Plan Concept 1

Landfill Construction

Construction Period:	01.01.2028	to		
Number of workers:		Duration (weeks):		

Off Road Equipment Type	Area Size	Number (ea)	Daily Hours	Annual Days Equipment Used
Demolition				
Scraper - CAT 657				
Water Truck - 4000 gal, 3 axle, 58000 gvw				
Site Preparation (18,11 ac)	***18 ac***	***7***	***56***	***10***
Graders	18	0	0	0
Tractors/Loaders/Backhoes	18	4	8	10
Rubber Tired Dozers	18	3	8	10
Scrapers	18	0	0	0
Grading (18,11 ac)	***18 ac***	***8***	***64***	***30***
Rubber Tired Dozers	18	1	8	30
Concrete/Industrial Saws	18	0	0	0
Tractors/Loaders/Backhoes	18	2	8	30
Graders	18	1	8	30
Excavators	18	2	8	30
Scrapers	18	2	8	30
Building Construction (0 ac)	***0 ac***	***0***	***0***	***0***
Cranes	0	0	0	0
Forklifts	0	0	0	0
Tractors/Loaders/Backhoes	0	0	0	0
Welders	0	0	0	0
Generator Sets	0	0	0	0
Paving - Asphalt (0 ac)	***0 ac***	***0***	***0***	***0***
Pavers	0	0	0	0
Cement and Mortar Mixers	0	0	0	0
Rollers	0	0	0	0
Tractors/Loaders/Backhoes	0	0	0	0
Paving Equipment	0	0	0	0
Paving - Concrete (0 ac)	***0 ac***	***0***	***0***	***0***
Pavers	0	0	0	0
Cement and Mortar Mixers	0	0	0	0
Rollers	0	0	0	0
Tractors/Loaders/Backhoes	0	0	0	0
Paving Equipment	0	0	0	0
Site Preparation - Pond (0 ac)	***0 ac***	***0***	***0***	***0***
Graders	0	0	0	0
Tractors/Loaders/Backhoes	0	0	0	0
Rubber Tired Dozers	0	0	0	0
Scrapers	0	0	0	0
Excavation (1835000 cy)	***1835000 cy***	***24***	***120***	***175***
Scrapers	1835000	6	8	175
Rubber Tired Dozers	1835000	3	8	175
Off-Highway Trucks	1835000	3	8	175
Other General Industrial Equipment	1835000	12	2	175

Area Size Reference Table	Size	Unit
Site Preparation	18	ac
Grading	18	ac
Building Construction	0	ac
Paving - Asphalt	0	ac
Paving - Concrete	0	ac
Site Preparation - Pond	0	ac
Excavation	1 835 000	cy

WPWMA EIR
Construction Emissions - Proposed Project Exhaust Emissions

Landfill Construction

Emission Factors					Emissions Factor (g/bhp-hr)								
Equipment Type	HorsePower	Load Factor	Construction Year	Year+Equipment Type+HorsePower	CO	NOX	PM10	PM2.5	ROG	TOG	SO2	CO2	CH4
Demolition													
Site Preparation (18,11 ac)													
Graders													
Tractors/Loaders/Backhoes	97	0,37	2028	2025Tractors/Loaders/Backhoes120	3,70E+00	2,60E-01	8,00E-03	8,00E-03	6,00E-02	2,48E-01	5,00E-03	4,77E+02	1,54E-01
Rubber Tired Dozers	247	0,4	2028	2025Rubber Tired Dozers250	2,20E+00	2,60E-01	8,00E-03	8,00E-03	6,00E-02	4,43E-01	5,00E-03	4,75E+02	1,53E-01
Scrapers													
Grading (18,11 ac)													
Rubber Tired Dozers	247	0,4	2028	2025Rubber Tired Dozers250	2,20E+00	2,60E-01	8,00E-03	8,00E-03	6,00E-02	4,43E-01	5,00E-03	4,75E+02	1,53E-01
Concrete/Industrial Saws													
Tractors/Loaders/Backhoes	97	0,37	2028	2025Tractors/Loaders/Backhoes120	3,70E+00	2,60E-01	8,00E-03	8,00E-03	6,00E-02	2,48E-01	5,00E-03	4,77E+02	1,54E-01
Graders	187	0,41	2028	2025Graders250	2,20E+00	2,60E-01	8,00E-03	8,00E-03	6,00E-02	2,74E-01	5,00E-03	4,73E+02	1,53E-01
Excavators	158	0,38	2028	2025Excavators175	2,20E+00	2,60E-01	8,00E-03	8,00E-03	6,00E-02	1,88E-01	5,00E-03	4,72E+02	1,53E-01
Scrapers	367	0,48	2028	2025Scrapers500	2,20E+00	2,60E-01	8,00E-03	8,00E-03	6,00E-02	2,57E-01	5,00E-03	4,73E+02	1,53E-01
Building Construction (0 ac)													
Cranes													
Forklifts													
Tractors/Loaders/Backhoes													
Welders													
Generator Sets													
Paving - Asphalt (0 ac)													
Pavers													
Cement and Mortar Mixers													
Rollers													
Tractors/Loaders/Backhoes													
Paving Equipment													
Paving - Concrete (0 ac)													
Pavers													
Cement and Mortar Mixers													
Rollers													
Tractors/Loaders/Backhoes													
Paving Equipment													
Site Preparation - Pond (0 ac)													
Graders													
Tractors/Loaders/Backhoes													
Rubber Tired Dozers													
Scrapers													
Excavation (1835000 cy)													
Scrapers	367	0,48	2028	2025Scrapers500	2,20E+00	2,60E-01	8,00E-03	8,00E-03	6,00E-02	2,57E-01	5,00E-03	4,73E+02	1,53E-01
Rubber Tired Dozers	247	0,4	2028	2025Rubber Tired Dozers250	2,20E+00	2,60E-01	8,00E-03	8,00E-03	6,00E-02	4,43E-01	5,00E-03	4,75E+02	1,53E-01
Off-Highway Trucks	402	0,38	2028	2025Off-Highway Trucks500	2,20E+00	2,60E-01	8,00E-03	8,00E-03	6,00E-02	2,11E-01	5,00E-03	4,75E+02	1,54E-01
Other General Industrial Equip	88	0,34	2028	2025Other General Industrial Equipmen	3,70E+00	2,60E-01	8,00E-03	8,00E-03	6,00E-02	3,06E-01	5,00E-03	4,70E+02	1,52E-01

WPWMA EIR
Construction Emissions - Proposed Project Exhaust Emissions

Landfill Construction

	Hourly Emissions (lb/hr)									Daily Emissions (lb/day)									Annual Emissions (lb/yr)								
Equipment Type	**TOG**	**ROG**	**CO**	**NOX**	**SO2**	**PM10**	**PM2.5**	**CO2**	**CH4**	**TOG**	**ROG**	**CO**	**NOX**	**SO2**	**PM10**	**PM2.5**	**CO2**	**CH4**	**TOG**	**ROG**	**CO**	**NOX**	**SO2**	**PM10**	**PM2.5**	**CO2**	**CH4**
Demolition																											
Site Preparation (18,11 ac)																											
Graders																											
Tractors/Loaders/Backhoes	0,079	0,019	1,171	0,082	0,002	0,003	0,003	151,028	0,049	0,629	0,152	9,368	0,658	0,013	0,020	0,020	1 208,224	0,390	6,290	1,519	93,683	6,583	0,127	0,203	0,203	12 082,2	3,899
Rubber Tired Dozers	0,289	0,039	1,438	0,170	0,003	0,005	0,005	310,110	0,100	2,314	0,314	11,501	1,359	0,026	0,042	0,042	2 480,882	0,800	23,138	3,137	115,007	13,592	0,261	0,418	0,418	24 808,8	7,998
Scrapers																											
Grading (18,11 ac)																											
Rubber Tired Dozers	0,096	0,013	0,479	0,057	0,001	0,002	0,002	103,370	0,033	0,771	0,105	3,834	0,453	0,009	0,014	0,014	826,961	0,267	23,138	3,137	115,007	13,592	0,261	0,418	0,418	24 808,8	7,998
Concrete/Industrial Saws																											
Tractors/Loaders/Backhoes	0,039	0,009	0,586	0,041	0,001	0,001	0,001	75,514	0,024	0,314	0,076	4,684	0,329	0,006	0,010	0,010	604,112	0,195	9,435	2,279	140,524	9,875	0,190	0,304	0,304	18 123,4	5,849
Graders	0,046	0,010	0,372	0,044	0,001	0,001	0,001	80,030	0,026	0,370	0,081	2,975	0,352	0,007	0,011	0,011	640,240	0,207	11,107	2,434	89,247	10,547	0,203	0,325	0,325	19 207,2	6,207
Excavators	0,050	0,016	0,582	0,069	0,001	0,002	0,002	125,085	0,041	0,398	0,127	4,659	0,551	0,011	0,017	0,017	1 000,677	0,324	11,933	3,812	139,778	16,519	0,318	0,508	0,508	30 020,3	9,721
Scrapers	0,200	0,047	1,709	0,202	0,004	0,006	0,006	367,037	0,119	1,599	0,373	13,671	1,616	0,031	0,050	0,050	2 936,297	0,951	47,970	11,185	410,115	48,468	0,932	1,491	1,491	88 088,9	28,522
Building Construction (0 ac)																											
Cranes																											
Forklifts																											
Tractors/Loaders/Backhoes																											
Welders																											
Generator Sets																											
Paving - Asphalt (0 ac)																											
Pavers																											
Cement and Mortar Mixers																											
Rollers																											
Tractors/Loaders/Backhoes																											
Paving Equipment																											
Paving - Concrete (0 ac)																											
Pavers																											
Cement and Mortar Mixers																											
Rollers																											
Tractors/Loaders/Backhoes																											
Paving Equipment																											
Site Preparation - Pond (0 ac)																											
Graders																											
Tractors/Loaders/Backhoes																											
Rubber Tired Dozers																											
Scrapers																											
Excavation (1835000 cy)																											
Scrapers	0,600	0,140	5,126	0,606	0,012	0,019	0,019	1 101,111	0,357	4,797	1,118	41,012	4,847	0,093	0,149	0,149	8 808,890	2,852	839,476	195,737	7 177,015	848,193	16,311	26,098	26,098	1 541 555,7	499,129
Rubber Tired Dozers	0,289	0,039	1,438	0,170	0,003	0,005	0,005	310,110	0,100	2,314	0,314	11,501	1,359	0,026	0,042	0,042	2 480,882	0,800	404,909	54,890	2 012,628	237,856	4,574	7,319	7,319	434 154,4	139,969
Off-Highway Trucks	0,213	0,061	2,223	0,263	0,005	0,008	0,008	479,879	0,156	1,705	0,485	17,782	2,101	0,040	0,065	0,065	3 839,029	1,245	298,389	84,868	3 111,833	367,762	7,072	11,316	11,316	671 830,1	217,828
Other General Industrial Equip	0,243	0,047	2,929	0,206	0,004	0,006	0,006	372,028	0,120	0,485	0,095	5,857	0,412	0,008	0,013	0,013	744,055	0,241	84,885	16,623	1 025,055	72,031	1,385	2,216	2,216	130 209,6	42,110
Total per Phase																											
Site Preparation	0,368	0,058	2,609	0,252	0,005	0,008	0,008	461,138	0,149	2,943	0,466	20,869	2,017	0,039	0,062	0,062	3 689,107	1,190	29,427	4,656	208,690	20,175	0,388	0,621	0,621	36 891,1	11,897
Grading	0,432	0,095	3,728	0,413	0,008	0,013	0,013	751,036	0,243	3,453	0,762	29,822	3,300	0,063	0,102	0,102	6 008,286	1,943	103,582	22,846	894,672	99,001	1,904	3,046	3,046	180 248,6	58,296
Building Construction	0,000	0,000	0,000	0,000	0,000	0,000	0,000	0,000	0,000	0,000	0,000	0,000	0,000	0,000	0,000	0,000	0,000	0,000	0,000	0,000	0,000	0,000	0,000	0,000	0,000	0,0	0,000
Paving - Asphalt	0,000	0,000	0,000	0,000	0,000	0,000	0,000	0,000	0,000	0,000	0,000	0,000	0,000	0,000	0,000	0,000	0,000	0,000	0,000	0,000	0,000	0,000	0,000	0,000	0,000	0,0	0,000
Paving - Concrete	0,000	0,000	0,000	0,000	0,000	0,000	0,000	0,000	0,000	0,000	0,000	0,000	0,000	0,000	0,000	0,000	0,000	0,000	0,000	0,000	0,000	0,000	0,000	0,000	0,000	0,0	0,000
Site Preparation - Pond	0,000	0,000	0,000	0,000	0,000	0,000	0,000	0,000	0,000	0,000	0,000	0,000	0,000	0,000	0,000	0,000	0,000	0,000	0,000	0,000	0,000	0,000	0,000	0,000	0,000	0,0	0,000
Excavation	1,345	0,287	11,715	1,244	0,024	0,038	0,038	2 263,128	0,732	9,301	2,012	76,152	8,719	0,168	0,268	0,268	########	5,137	1 627,659	352,117	13 326,531	1 525,842	29,343	46,949	46,949	2 777 749,9	899,037
Total																			**1 760,668**	**379,619**	**14 429,893**	**1 645,018**	**31,635**	**50,616**	**50,616**	**2 994 889,6**	**969,230**

WPWMA EIR
Construction Emissions - Proposed Project Exhaust Emissions
Plan Concept 1

Landfill Lining & Partial Closure

Construction Period:	01.01.2029	to		
Number of workers:		Duration (weeks):		

Off Road Equipment Type	Area Size	Number (ea)	Daily Hours	Annual Days Equipment Used
Demolition				
Scraper - CAT 657				
Water Truck - 4000 gal, 3 axle, 58000 gvw				
Site Preparation (0 ac)	***0 ac***	***0***	***0***	***0***
Graders	0	0	0	0
Tractors/Loaders/Backhoes	0	0	0	0
Rubber Tired Dozers	0	0	0	0
Scrapers	0	0	0	0
Grading (0 ac)	***0 ac***	***0***	***0***	***0***
Rubber Tired Dozers	0	0	0	0
Concrete/Industrial Saws	0	0	0	0
Tractors/Loaders/Backhoes	0	0	0	0
Graders	0	0	0	0
Excavators	0	0	0	0
Scrapers	0	0	0	0
Building Construction (0 ac)	***0 ac***	***0***	***0***	***0***
Cranes	0	0	0	0
Forklifts	0	0	0	0
Tractors/Loaders/Backhoes	0	0	0	0
Welders	0	0	0	0
Generator Sets	0	0	0	0
Paving - Asphalt (0 ac)	***0 ac***	***0***	***0***	***0***
Pavers	0	0	0	0
Cement and Mortar Mixers	0	0	0	0
Rollers	0	0	0	0
Tractors/Loaders/Backhoes	0	0	0	0
Paving Equipment	0	0	0	0
Paving - Concrete (0 ac)	***0 ac***	***0***	***0***	***0***
Pavers	0	0	0	0
Cement and Mortar Mixers	0	0	0	0
Rollers	0	0	0	0
Tractors/Loaders/Backhoes	0	0	0	0
Paving Equipment	0	0	0	0
Site Preparation - Pond (0 ac)	***0 ac***	***0***	***0***	***0***
Graders	0	0	0	0
Tractors/Loaders/Backhoes	0	0	0	0
Rubber Tired Dozers	0	0	0	0
Scrapers	0	0	0	0
Excavation (131750,25 cy)	***131750 cy***	***4***	***26***	***13***
Scrapers	131750	1	8	13
Rubber Tired Dozers	131750	1	8	13
Off-Highway Trucks	131750	1	8	13
Other General Industrial Equipment	131750	1	2	13
Lining & Partial Closure (18,11 ac)	***18 ac***	***44***	***216***	***175***
Scrapers	18	2	8	175
Scrapers	18	1	8	175
Off-Highway Trucks	18	2	8	175
Rubber Tired Dozers	18	1	8	175
Rubber Tired Dozers	18	1	8	175
Rollers	18	1	4	175
Graders	18	1	8	175
Bore/Drill Rigs	18	1	8	175
Tractors/Loaders/Backhoes	18	2	6	175
Off-Highway Trucks	18	2	8	175
Off-Highway Trucks	18	1	8	175
Excavators	18	1	8	175
Forklifts	18	2	4	175
Other General Industrial Equipment	18	20	2	175
Generator Sets	18	6	8	175

Area Size Reference Table	Size	Unit
Site Preparation	0	ac
Grading	0	ac
Building Construction	0	ac
Paving - Asphalt	0	ac
Paving - Concrete	0	ac
Site Preparation - Pond	0	ac
Excavation	131 750	cy
Lining & Partial Closure	18	ac

WPWMA EIR
Construction Emissions - Proposed Project Exhaust Emissions

Landfill Lining & Partial Closure

Emission Factors					Emissions Factor (g/bhp-hr)								
Equipment Type	HorsePower	Load Factor	Construction Year	Year+Equipment Type+HorsePower	CO	NOX	PM10	PM2.5	ROG	TOG	SO2	CO2	CH4
Demolition													
Site Preparation (0 ac)													
Graders													
Tractors/Loaders/Backhoes													
Rubber Tired Dozers													
Scrapers													
Grading (0 ac)													
Rubber Tired Dozers													
Concrete/Industrial Saws													
Tractors/Loaders/Backhoes													
Graders													
Excavators													
Scrapers													
Building Construction (0 ac)													
Cranes													
Forklifts													
Tractors/Loaders/Backhoes													
Welders													
Generator Sets													
Paving - Asphalt (0 ac)													
Pavers													
Cement and Mortar Mixers													
Rollers													
Tractors/Loaders/Backhoes													
Paving Equipment													
Paving - Concrete (0 ac)													
Pavers													
Cement and Mortar Mixers													
Rollers													
Tractors/Loaders/Backhoes													
Paving Equipment													
Site Preparation - Pond (0 ac)													
Graders													
Tractors/Loaders/Backhoes													
Rubber Tired Dozers													
Scrapers													
Excavation (131750,25 cy)													
Scrapers	367	0,48	2029	2025Scrapers500	2,20E+00	2,60E-01	8,00E-03	8,00E-03	6,00E-02	2,57E-01	5,00E-03	4,73E+02	1,53E-01
Rubber Tired Dozers	247	0,4	2029	2025Rubber Tired Dozers250	2,20E+00	2,60E-01	8,00E-03	8,00E-03	6,00E-02	4,43E-01	5,00E-03	4,75E+02	1,53E-01
Off-Highway Trucks	402	0,38	2029	2025Off-Highway Trucks500	2,20E+00	2,60E-01	8,00E-03	8,00E-03	6,00E-02	2,11E-01	5,00E-03	4,75E+02	1,54E-01
Other General Industrial Equip	88	0,34	2029	2025Other General Industrial Equipmen	3,70E+00	2,60E-01	8,00E-03	8,00E-03	6,00E-02	3,06E-01	5,00E-03	4,70E+02	1,52E-01
Lining & Partial Closure (18,11 ac)													
Scrapers	367	0,48	2029	2025Scrapers500	2,20E+00	2,60E-01	8,00E-03	8,00E-03	6,00E-02	2,57E-01	5,00E-03	4,73E+02	1,53E-01
Scrapers	367	0,48	2029	2025Scrapers500	2,20E+00	2,60E-01	8,00E-03	8,00E-03	6,00E-02	2,57E-01	5,00E-03	4,73E+02	1,53E-01
Off-Highway Trucks	402	0,38	2029	2025Off-Highway Trucks500	2,20E+00	2,60E-01	8,00E-03	8,00E-03	6,00E-02	2,11E-01	5,00E-03	4,75E+02	1,54E-01
Rubber Tired Dozers	247	0,4	2029	2025Rubber Tired Dozers250	2,20E+00	2,60E-01	8,00E-03	8,00E-03	6,00E-02	4,43E-01	5,00E-03	4,75E+02	1,53E-01
Rubber Tired Dozers	247	0,4	2029	2025Rubber Tired Dozers250	2,20E+00	2,60E-01	8,00E-03	8,00E-03	6,00E-02	4,43E-01	5,00E-03	4,75E+02	1,53E-01
Rollers	80	0,38	2029	2025Rollers120	3,70E+00	2,60E-01	8,00E-03	8,00E-03	6,00E-02	3,04E-01	5,00E-03	4,74E+02	1,53E-01
Graders	187	0,41	2029	2025Graders250	2,20E+00	2,60E-01	8,00E-03	8,00E-03	6,00E-02	2,74E-01	5,00E-03	4,73E+02	1,53E-01
Bore/Drill Rigs	221	0,5	2029	2025Bore/Drill Rigs250	2,20E+00	2,60E-01	8,00E-03	8,00E-03	6,00E-02	1,28E-01	5,00E-03	4,71E+02	1,52E-01
Tractors/Loaders/Backhoes	97	0,37	2029	2025Tractors/Loaders/Backhoes120	3,70E+00	2,60E-01	8,00E-03	8,00E-03	6,00E-02	2,48E-01	5,00E-03	4,77E+02	1,54E-01
Off-Highway Trucks	402	0,38	2029	2025Off-Highway Trucks500	2,20E+00	2,60E-01	8,00E-03	8,00E-03	6,00E-02	2,11E-01	5,00E-03	4,75E+02	1,54E-01
Off-Highway Trucks	402	0,38	2029	2025Off-Highway Trucks500	2,20E+00	2,60E-01	8,00E-03	8,00E-03	6,00E-02	2,11E-01	5,00E-03	4,75E+02	1,54E-01
Excavators	158	0,38	2029	2025Excavators175	2,20E+00	2,60E-01	8,00E-03	8,00E-03	6,00E-02	1,88E-01	5,00E-03	4,72E+02	1,53E-01
Forklifts	89	0,2	2029	2025Forklifts120	3,70E+00	2,60E-01	8,00E-03	8,00E-03	6,00E-02	3,29E-01	5,00E-03	4,72E+02	1,53E-01
Other General Industrial Equip	88	0,34	2029	2025Other General Industrial Equipmen	3,70E+00	2,60E-01	8,00E-03	8,00E-03	6,00E-02	3,06E-01	5,00E-03	4,70E+02	1,52E-01
Generator Sets	84	0,74	2029	2025Generator Sets120	3,70E+00	2,60E-01	8,00E-03	8,00E-03	6,00E-02	4,94E+00	6,00E-03	5,68E+02	2,10E-02

WPWMA EIR
Construction Emissions - Proposed Project Exhaust Emissions

Landfill Lining & Partial Closure

	Hourly Emissions (lb/hr)									Daily Emissions (lb/day)									Annual Emissions (lb/yr)								
Equipment Type	**TOG**	**ROG**	**CO**	**NOX**	**SO2**	**PM10**	**PM2.5**	**CO2**	**CH4**	**TOG**	**ROG**	**CO**	**NOX**	**SO2**	**PM10**	**PM2.5**	**CO2**	**CH4**	**TOG**	**ROG**	**CO**	**NOX**	**SO2**	**PM10**	**PM2.5**	**CO2**	**CH4**
Demolition																											
Site Preparation (0 ac)																											
Graders																											
Tractors/Loaders/Backhoes																											
Rubber Tired Dozers																											
Scrapers																											
Grading (0 ac)																											
Rubber Tired Dozers																											
Concrete/Industrial Saws																											
Tractors/Loaders/Backhoes																											
Graders																											
Excavators																											
Scrapers																											
Building Construction (0 ac)																											
Cranes																											
Forklifts																											
Tractors/Loaders/Backhoes																											
Welders																											
Generator Sets																											
Paving - Asphalt (0 ac)																											
Pavers																											
Cement and Mortar Mixers																											
Rollers																											
Tractors/Loaders/Backhoes																											
Paving Equipment																											
Paving - Concrete (0 ac)																											
Pavers																											
Cement and Mortar Mixers																											
Rollers																											
Tractors/Loaders/Backhoes																											
Paving Equipment																											
Site Preparation - Pond (0 ac)																											
Graders																											
Tractors/Loaders/Backhoes																											
Rubber Tired Dozers																											
Scrapers																											
Excavation (131750,25 cy)																											
Scrapers	0,100	0,023	0,854	0,101	0,002	0,003	0,003	183,519	0,059	0,800	0,186	6,835	0,808	0,016	0,025	0,025	1 468,148	0,475	10,394	2,423	88,858	10,501	0,202	0,323	0,323	19 085,9	6,180
Rubber Tired Dozers	0,096	0,013	0,479	0,057	0,001	0,002	0,002	103,370	0,033	0,771	0,105	3,834	0,453	0,009	0,014	0,014	826,961	0,267	10,026	1,359	49,837	5,890	0,113	0,181	0,181	10 750,5	3,466
Off-Highway Trucks	0,071	0,020	0,741	0,088	0,002	0,003	0,003	159,960	0,052	0,568	0,162	5,927	0,700	0,013	0,022	0,022	1 279,676	0,415	7,389	2,101	77,055	9,106	0,175	0,280	0,280	16 635,8	5,394
Other General Industrial Equip	0,020	0,004	0,244	0,017	0,000	0,001	0,001	31,002	0,010	0,040	0,008	0,488	0,034	0,001	0,001	0,001	62,005	0,020	0,525	0,103	6,346	0,446	0,009	0,014	0,014	806,1	0,261
Lining & Partial Closure (18,11 ac)																											
Scrapers	0,200	0,047	1,709	0,202	0,004	0,006	0,006	367,037	0,119	1,599	0,373	13,671	1,616	0,031	0,050	0,050	2 936,297	0,951	279,825	65,246	2 392,338	282,731	5,437	8,699	8,699	513 851,9	166,376
Scrapers	0,100	0,023	0,854	0,101	0,002	0,003	0,003	183,519	0,059	0,800	0,186	6,835	0,808	0,016	0,025	0,025	1 468,148	0,475	139,913	32,623	1 196,169	141,365	2,719	4,350	4,350	256 926,0	83,188
Off-Highway Trucks	0,142	0,040	1,482	0,175	0,003	0,005	0,005	319,919	0,104	1,137	0,323	11,855	1,401	0,027	0,043	0,043	2 559,353	0,830	198,926	56,579	2 074,555	245,175	4,715	7,544	7,544	447 886,7	145,219
Rubber Tired Dozers	0,096	0,013	0,479	0,057	0,001	0,002	0,002	103,370	0,033	0,771	0,105	3,834	0,453	0,009	0,014	0,014	826,961	0,267	134,970	18,297	670,876	79,285	1,525	2,440	2,440	144 718,1	46,656
Rubber Tired Dozers	0,096	0,013	0,479	0,057	0,001	0,002	0,002	103,370	0,033	0,771	0,105	3,834	0,453	0,009	0,014	0,014	826,961	0,267	134,970	18,297	670,876	79,285	1,525	2,440	2,440	144 718,1	46,656
Rollers	0,020	0,004	0,248	0,017	0,000	0,001	0,001	31,758	0,010	0,081	0,016	0,992	0,070	0,001	0,002	0,002	127,031	0,041	14,261	2,815	173,583	12,198	0,235	0,375	0,375	22 230,4	7,178
Graders	0,046	0,010	0,372	0,044	0,001	0,001	0,001	80,030	0,026	0,370	0,081	2,975	0,352	0,007	0,011	0,011	640,240	0,207	64,789	14,198	520,608	61,526	1,183	1,893	1,893	112 042,0	36,206
Bore/Drill Rigs	0,031	0,015	0,536	0,063	0,001	0,002	0,002	114,656	0,037	0,249	0,117	4,288	0,507	0,010	0,016	0,016	917,251	0,296	43,591	20,463	750,322	88,674	1,705	2,728	2,728	160 518,9	51,840
Tractors/Loaders/Backhoes	0,039	0,009	0,586	0,041	0,001	0,001	0,001	75,514	0,024	0,236	0,057	3,513	0,247	0,005	0,008	0,008	453,084	0,146	41,276	9,970	614,793	43,202	0,831	1,329	1,329	79 289,7	25,589
Off-Highway Trucks	0,142	0,040	1,482	0,175	0,003	0,005	0,005	319,919	0,104	1,137	0,323	11,855	1,401	0,027	0,043	0,043	2 559,353	0,830	198,926	56,579	2 074,555	245,175	4,715	7,544	7,544	447 886,7	145,219
Off-Highway Trucks	0,071	0,020	0,741	0,088	0,002	0,003	0,003	159,960	0,052	0,568	0,162	5,927	0,700	0,013	0,022	0,022	1 279,676	0,415	99,463	28,289	1 037,278	122,587	2,357	3,772	3,772	223 943,4	72,609
Excavators	0,025	0,008	0,291	0,034	0,001	0,001	0,001	62,542	0,020	0,199	0,064	2,330	0,275	0,005	0,008	0,008	500,338	0,162	34,804	11,119	407,686	48,181	0,927	1,482	1,482	87 559,2	28,353
Forklifts	0,026	0,005	0,290	0,020	0,000	0,001	0,001	37,008	0,012	0,103	0,019	1,162	0,082	0,002	0,003	0,003	148,031	0,048	18,096	3,296	203,275	14,284	0,275	0,440	0,440	25 905,4	8,406
Other General Industrial Equip	0,404	0,079	4,881	0,343	0,007	0,011	0,011	620,046	0,201	0,808	0,158	9,762	0,686	0,013	0,021	0,021	1 240,092	0,401	141,474	27,704	1 708,425	120,052	2,309	3,694	3,694	217 016,1	70,184
Generator Sets	4,063	0,049	3,042	0,214	0,005	0,007	0,007	467,276	0,017	32,508	0,395	24,338	1,710	0,039	0,053	0,053	3 738,210	0,138	5 688,891	69,068	4 259,186	299,294	6,907	9,209	9,209	654 186,8	24,174
Total per Phase																											
Site Preparation	0,000	0,000	0,000	0,000	0,000	0,000	0,000	0,000	0,000	0,000	0,000	0,000	0,000	0,000	0,000	0,000	0,000	0,000	0,000	0,000	0,000	0,000	0,000	0,000	0,000	0,0	0,000
Grading	0,000	0,000	0,000	0,000	0,000	0,000	0,000	0,000	0,000	0,000	0,000	0,000	0,000	0,000	0,000	0,000	0,000	0,000	0,000	0,000	0,000	0,000	0,000	0,000	0,000	0,0	0,000
Building Construction	0,000	0,000	0,000	0,000	0,000	0,000	0,000	0,000	0,000	0,000	0,000	0,000	0,000	0,000	0,000	0,000	0,000	0,000	0,000	0,000	0,000	0,000	0,000	0,000	0,000	0,0	0,000
Paving - Asphalt	0,000	0,000	0,000	0,000	0,000	0,000	0,000	0,000	0,000	0,000	0,000	0,000	0,000	0,000	0,000	0,000	0,000	0,000	0,000	0,000	0,000	0,000	0,000	0,000	0,000	0,0	0,000
Paving - Concrete	0,000	0,000	0,000	0,000	0,000	0,000	0,000	0,000	0,000	0,000	0,000	0,000	0,000	0,000	0,000	0,000	0,000	0,000	0,000	0,000	0,000	0,000	0,000	0,000	0,000	0,0	0,000
Site Preparation - Pond	0,000	0,000	0,000	0,000	0,000	0,000	0,000	0,000	0,000	0,000	0,000	0,000	0,000	0,000	0,000	0,000	0,000	0,000	0,000	0,000	0,000	0,000	0,000	0,000	0,000	0,0	0,000
Excavation	0,288	0,061	2,319	0,262	0,005	0,008	0,008	477,850	0,155	2,180	0,461	17,084	1,996	0,038	0,061	0,061	3 636,790	1,177	28,334	5,987	222,095	25,944	0,499	0,798	0,798	47 278,3	15,300
Lining & Partial Closure	5,503	0,376	17,473	1,631	0,032	0,050	0,050	3 045,924	0,852	41,338	2,483	107,169	10,760	0,214	0,331	0,331	########	5,473	7 234,176	434,542	18 754,527	1 883,015	37,363	57,939	57,939	3 538 679,6	957,853
Total																			**7 262,510**	**440,529**	**18 976,622**	**1 908,959**	**37,862**	**58,737**	**58,737**	**3 585 957,9**	**973,153**

WPWMA EIR
Construction Emissions - Proposed Project Exhaust Emissions
Plan Concept 1

Recovered Materials Storage

Construction Period:	01.01.2029	to	
Number of workers:		Duration (weeks):	

Off Road Equipment Type	Area Size	Number (ea)	Daily Hours	Annual Days Equipment Used
Demolition				
Scraper - CAT 657				
Water Truck - 4000 gal, 3 axle, 58000 gvw				
Site Preparation (2 ac)	***2 ac***	***3***	***23***	***3***
Graders	2	1	8	3
Tractors/Loaders/Backhoes	2	1	8	3
Rubber Tired Dozers	2	1	7	3
Scrapers	2	0	0	0
Grading (2 ac)	***2 ac***	***3***	***19***	***6***
Rubber Tired Dozers	2	1	6	6
Concrete/Industrial Saws	2	0	0	0
Tractors/Loaders/Backhoes	2	1	7	6
Graders	2	1	6	6
Excavators	2	0	0	0
Scrapers	2	0	0	0
Building Construction (2 ac)	***2 ac***	***7***	***50***	***220***
Cranes	2	1	6	220
Forklifts	2	1	6	220
Tractors/Loaders/Backhoes	2	1	6	220
Welders	2	3	8	220
Generator Sets	2	1	8	220
Paving - Asphalt (1 ac)	***1 ac***	***7***	***45***	***10***
Pavers	1	1	7	10
Cement and Mortar Mixers	1	4	6	10
Rollers	1	1	7	10
Tractors/Loaders/Backhoes	1	1	7	10
Paving Equipment	1	0	0	0
Paving - Concrete (2 ac)	***2 ac***	***5***	***35***	***10***
Pavers	2	1	6	10
Cement and Mortar Mixers	2	1	6	10
Rollers	2	1	7	10
Tractors/Loaders/Backhoes	2	1	8	10
Paving Equipment	2	1	8	10
Site Preparation - Pond (0 ac)	***0 ac***	***0***	***0***	***0***
Graders	0	0	0	0
Tractors/Loaders/Backhoes	0	0	0	0
Rubber Tired Dozers	0	0	0	0
Scrapers	0	0	0	0
Excavation (0 cy)	***0 cy***	***0***	***0***	***0***
Scrapers	0	0	0	0
Rubber Tired Dozers	0	0	0	0
Off-Highway Trucks	0	0	0	0
Other General Industrial Equipment	0	0	0	0

Area Size Reference Table	Size	Unit
Site Preparation	2	ac
Grading	2	ac
Building Construction	2	ac
Paving - Asphalt	1	ac
Paving - Concrete	2	ac
Site Preparation - Pond	0	ac
Excavation	0	cy

WPWMA EIR
Construction Emissions - Proposed Project Exhaust Emissions

Recovered Materials Storage

Emission Factors					Emissions Factor (g/bhp-hr)								
Equipment Type	HorsePower	Load Factor	Construction Year	Year+Equipment Type+HorsePower	CO	NOX	PM10	PM2.5	ROG	TOG	SO2	CO2	CH4
Demolition													
Site Preparation (2 ac)													
Graders	187	0,41	2029	2025Graders250	2,20E+00	2,60E-01	8,00E-03	8,00E-03	6,00E-02	2,74E-01	5,00E-03	4,73E+02	1,53E-01
Tractors/Loaders/Backhoes	97	0,37	2029	2025Tractors/Loaders/Backhoes120	3,70E+00	2,60E-01	8,00E-03	8,00E-03	6,00E-02	2,48E-01	5,00E-03	4,77E+02	1,54E-01
Rubber Tired Dozers	247	0,4	2029	2025Rubber Tired Dozers250	2,20E+00	2,60E-01	8,00E-03	8,00E-03	6,00E-02	4,43E-01	5,00E-03	4,75E+02	1,53E-01
Scrapers													
Grading (2 ac)													
Rubber Tired Dozers	247	0,4	2029	2025Rubber Tired Dozers250	2,20E+00	2,60E-01	8,00E-03	8,00E-03	6,00E-02	4,43E-01	5,00E-03	4,75E+02	1,53E-01
Concrete/Industrial Saws													
Tractors/Loaders/Backhoes	97	0,37	2029	2025Tractors/Loaders/Backhoes120	3,70E+00	2,60E-01	8,00E-03	8,00E-03	6,00E-02	2,48E-01	5,00E-03	4,77E+02	1,54E-01
Graders	187	0,41	2029	2025Graders250	2,20E+00	2,60E-01	8,00E-03	8,00E-03	6,00E-02	2,74E-01	5,00E-03	4,73E+02	1,53E-01
Excavators													
Scrapers													
Building Construction (2 ac)													
Cranes	231	0,29	2029	2025Cranes250	2,20E+00	2,60E-01	8,00E-03	8,00E-03	6,00E-02	3,15E-01	5,00E-03	4,73E+02	1,53E-01
Forklifts	89	0,2	2029	2025Forklifts120	3,70E+00	2,60E-01	8,00E-03	8,00E-03	6,00E-02	3,29E-01	5,00E-03	4,72E+02	1,53E-01
Tractors/Loaders/Backhoes	97	0,37	2029	2025Tractors/Loaders/Backhoes120	3,70E+00	2,60E-01	8,00E-03	8,00E-03	6,00E-02	2,48E-01	5,00E-03	4,77E+02	1,54E-01
Welders	46	0,45	2029	2025Welders50	4,10E+00	2,75E+00	8,00E-03	8,00E-03	1,20E-01	6,32E+00	7,00E-03	5,68E+02	5,40E-02
Generator Sets	84	0,74	2029	2025Generator Sets120	3,70E+00	2,60E-01	8,00E-03	8,00E-03	6,00E-02	4,94E+00	6,00E-03	5,68E+02	2,10E-02
Paving - Asphalt (1 ac)													
Pavers	130	0,42	2029	2025Pavers175	2,20E+00	2,60E-01	8,00E-03	8,00E-03	6,00E-02	2,15E-01	5,00E-03	4,72E+02	1,53E-01
Cement and Mortar Mixers	9	0,56	2029	2025Cement and Mortar Mixers15	4,10E+00	2,75E+00	8,00E-03	8,00E-03	1,20E-01	1,08E+00	8,00E-03	5,68E+02	5,90E-02
Rollers	80	0,38	2029	2025Rollers120	3,70E+00	2,60E-01	8,00E-03	8,00E-03	6,00E-02	3,04E-01	5,00E-03	4,74E+02	1,53E-01
Tractors/Loaders/Backhoes	97	0,37	2029	2025Tractors/Loaders/Backhoes120	3,70E+00	2,60E-01	8,00E-03	8,00E-03	6,00E-02	2,48E-01	5,00E-03	4,77E+02	1,54E-01
Paving Equipment													
Paving - Concrete (2 ac)													
Pavers	130	0,42	2029	2025Pavers175	2,20E+00	2,60E-01	8,00E-03	8,00E-03	6,00E-02	2,15E-01	5,00E-03	4,72E+02	1,53E-01
Cement and Mortar Mixers	9	0,56	2029	2025Cement and Mortar Mixers15	4,10E+00	2,75E+00	8,00E-03	8,00E-03	1,20E-01	1,08E+00	8,00E-03	5,68E+02	5,90E-02
Rollers	80	0,38	2029	2025Rollers120	3,70E+00	2,60E-01	8,00E-03	8,00E-03	6,00E-02	3,04E-01	5,00E-03	4,74E+02	1,53E-01
Tractors/Loaders/Backhoes	97	0,37	2029	2025Tractors/Loaders/Backhoes120	3,70E+00	2,60E-01	8,00E-03	8,00E-03	6,00E-02	2,48E-01	5,00E-03	4,77E+02	1,54E-01
Paving Equipment	132	0,36	2029	2025Paving Equipment175	2,20E+00	2,60E-01	8,00E-03	8,00E-03	6,00E-02	2,08E-01	5,00E-03	4,70E+02	1,52E-01
Site Preparation - Pond (0 ac)													
Graders													
Tractors/Loaders/Backhoes													
Rubber Tired Dozers													
Scrapers													
Excavation (0 cy)													
Scrapers													
Rubber Tired Dozers													
Off-Highway Trucks													
Other General Industrial Equip													

WPWMA EIR
Construction Emissions - Proposed Project Exhaust Emissions

Recovered Materials Storage

	Hourly Emissions (lb/hr)									Daily Emissions (lb/day)									Annual Emissions (lb/yr)								
Equipment Type	**TOG**	**ROG**	**CO**	**NOX**	**SO2**	**PM10**	**PM2.5**	**CO2**	**CH4**	**TOG**	**ROG**	**CO**	**NOX**	**SO2**	**PM10**	**PM2.5**	**CO2**	**CH4**	**TOG**	**ROG**	**CO**	**NOX**	**SO2**	**PM10**	**PM2.5**	**CO2**	**CH4**
Demolition																											
Site Preparation (2 ac)																											
Graders	0,046	0,010	0,372	0,044	0,001	0,001	0,001	80,030	0,026	0,370	0,081	2,975	0,352	0,007	0,011	0,011	640,240	0,207	1,111	0,243	8,925	1,055	0,020	0,032	0,032	1 920,7	0,621
Tractors/Loaders/Backhoes	0,020	0,005	0,293	0,021	0,000	0,001	0,001	37,757	0,012	0,157	0,038	2,342	0,165	0,003	0,005	0,005	302,056	0,097	0,472	0,114	7,026	0,494	0,009	0,015	0,015	906,2	0,292
Rubber Tired Dozers	0,096	0,013	0,479	0,057	0,001	0,002	0,002	103,370	0,033	0,675	0,091	3,354	0,396	0,008	0,012	0,012	723,591	0,233	2,025	0,274	10,063	1,189	0,023	0,037	0,037	2 170,8	0,700
Scrapers																											
Grading (2 ac)																											
Rubber Tired Dozers	0,096	0,013	0,479	0,057	0,001	0,002	0,002	103,370	0,033	0,578	0,078	2,875	0,340	0,007	0,010	0,010	620,221	0,200	3,471	0,470	17,251	2,039	0,039	0,063	0,063	3 721,3	1,200
Concrete/Industrial Saws																											
Tractors/Loaders/Backhoes	0,020	0,005	0,293	0,021	0,000	0,001	0,001	37,757	0,012	0,138	0,033	2,049	0,144	0,003	0,004	0,004	264,299	0,085	0,826	0,199	12,296	0,864	0,017	0,027	0,027	1 585,8	0,512
Graders	0,046	0,010	0,372	0,044	0,001	0,001	0,001	80,030	0,026	0,278	0,061	2,231	0,264	0,005	0,008	0,008	480,180	0,155	1,666	0,365	13,387	1,582	0,030	0,049	0,049	2 881,1	0,931
Excavators																											
Scrapers																											
Building Construction (2 ac)																											
Cranes	0,047	0,009	0,325	0,038	0,001	0,001	0,001	69,853	0,023	0,279	0,053	1,949	0,230	0,004	0,007	0,007	419,120	0,136	61,424	11,697	428,885	50,686	0,975	1,560	1,560	92 206,4	29,827
Forklifts	0,013	0,002	0,145	0,010	0,000	0,000	0,000	18,504	0,006	0,078	0,014	0,871	0,061	0,001	0,002	0,002	111,023	0,036	17,062	3,108	191,659	13,468	0,259	0,414	0,414	24 425,1	7,925
Tractors/Loaders/Backhoes	0,020	0,005	0,293	0,021	0,000	0,001	0,001	37,757	0,012	0,118	0,028	1,757	0,123	0,002	0,004	0,004	226,542	0,073	25,945	6,267	386,441	27,155	0,522	0,836	0,836	49 839,3	16,084
Welders	0,865	0,016	0,561	0,376	0,001	0,001	0,001	77,804	0,007	6,917	0,131	4,491	3,012	0,008	0,009	0,009	622,434	0,059	1 521,641	28,915	987,922	662,631	1,687	1,928	1,928	136 935,4	13,012
Generator Sets	0,677	0,008	0,507	0,036	0,001	0,001	0,001	77,879	0,003	5,418	0,066	4,056	0,285	0,007	0,009	0,009	623,035	0,023	1 191,958	14,471	892,401	62,709	1,447	1,930	1,930	137 067,7	5,065
Paving - Asphalt (1 ac)																											
Pavers	0,026	0,007	0,265	0,031	0,001	0,001	0,001	56,874	0,018	0,181	0,051	1,854	0,219	0,004	0,007	0,007	398,119	0,129	1,810	0,506	18,537	2,191	0,042	0,067	0,067	3 981,2	1,289
Cement and Mortar Mixers	0,048	0,005	0,182	0,122	0,000	0,000	0,000	25,258	0,003	0,287	0,032	1,093	0,733	0,002	0,002	0,002	151,549	0,016	2,867	0,320	10,934	7,333	0,021	0,021	0,021	1 515,5	0,157
Rollers	0,020	0,004	0,248	0,017	0,000	0,001	0,001	31,758	0,010	0,143	0,028	1,736	0,122	0,002	0,004	0,004	222,304	0,072	1,426	0,281	17,358	1,220	0,023	0,038	0,038	2 223,0	0,718
Tractors/Loaders/Backhoes	0,020	0,005	0,293	0,021	0,000	0,001	0,001	37,757	0,012	0,138	0,033	2,049	0,144	0,003	0,004	0,004	264,299	0,085	1,376	0,332	20,493	1,440	0,028	0,044	0,044	2 643,0	0,853
Paving Equipment																											
Paving - Concrete (2 ac)																											
Pavers	0,026	0,007	0,265	0,031	0,001	0,001	0,001	56,874	0,018	0,155	0,043	1,589	0,188	0,004	0,006	0,006	341,245	0,111	1,551	0,433	15,889	1,878	0,036	0,058	0,058	3 412,5	1,105
Cement and Mortar Mixers	0,012	0,001	0,046	0,031	0,000	0,000	0,000	6,315	0,001	0,072	0,008	0,273	0,183	0,001	0,001	0,001	37,887	0,004	0,717	0,080	2,733	1,833	0,005	0,005	0,005	378,9	0,039
Rollers	0,020	0,004	0,248	0,017	0,000	0,001	0,001	31,758	0,010	0,143	0,028	1,736	0,122	0,002	0,004	0,004	222,304	0,072	1,426	0,281	17,358	1,220	0,023	0,038	0,038	2 223,0	0,718
Tractors/Loaders/Backhoes	0,020	0,005	0,293	0,021	0,000	0,001	0,001	37,757	0,012	0,157	0,038	2,342	0,165	0,003	0,005	0,005	302,056	0,097	1,572	0,380	23,421	1,646	0,032	0,051	0,051	3 020,6	0,975
Paving Equipment	0,022	0,006	0,230	0,027	0,001	0,001	0,001	49,290	0,016	0,175	0,050	1,844	0,218	0,004	0,007	0,007	394,318	0,127	1,747	0,503	18,438	2,179	0,042	0,067	0,067	3 943,2	1,274
Site Preparation - Pond (0 ac)																											
Graders																											
Tractors/Loaders/Backhoes																											
Rubber Tired Dozers																											
Scrapers																											
Excavation (0 cy)																											
Scrapers																											
Rubber Tired Dozers																											
Off-Highway Trucks																											
Other General Industrial Equip																											
Total per Phase																											
Site Preparation	0,162	0,028	1,144	0,121	0,002	0,004	0,004	221,157	0,071	1,202	0,211	8,671	0,913	0,018	0,028	0,028	1 665,887	0,538	3,607	0,632	26,014	2,738	0,053	0,084	0,084	4 997,7	1,613
Grading	0,162	0,028	1,144	0,121	0,002	0,004	0,004	221,157	0,071	0,994	0,172	7,156	0,747	0,014	0,023	0,023	1 364,700	0,440	5,962	1,035	42,934	4,485	0,086	0,138	0,138	8 188,2	2,643
Building Construction	1,621	0,041	1,831	0,481	0,003	0,004	0,004	281,798	0,051	12,809	0,293	13,124	3,712	0,022	0,030	0,030	2 002,154	0,327	2 818,031	64,458	2 887,309	816,650	4,890	6,667	6,667	440 473,9	71,913
Paving - Asphalt	0,114	0,021	0,988	0,192	0,002	0,002	0,002	151,647	0,043	0,748	0,144	6,732	1,218	0,011	0,017	0,017	1 036,272	0,302	7,479	1,439	67,322	12,184	0,115	0,171	0,171	10 362,7	3,017
Paving - Concrete	0,100	0,024	1,082	0,127	0,002	0,003	0,003	181,993	0,057	0,701	0,168	7,784	0,876	0,014	0,022	0,022	1 297,811	0,411	7,014	1,677	77,840	8,756	0,138	0,218	0,218	12 978,1	4,111
Site Preparation - Pond	0,000	0,000	0,000	0,000	0,000	0,000	0,000	0,000	0,000	0,000	0,000	0,000	0,000	0,000	0,000	0,000	0,000	0,000	0,000	0,000	0,000	0,000	0,000	0,000	0,000	0,0	0,000
Excavation	0,000	0,000	0,000	0,000	0,000	0,000	0,000	0,000	0,000	0,000	0,000	0,000	0,000	0,000	0,000	0,000	0,000	0,000	0,000	0,000	0,000	0,000	0,000	0,000	0,000	0,0	0,000
Total																			**2 842,092**	**69,241**	**3 101,420**	**844,812**	**5,282**	**7,278**	**7,278**	**477 000,6**	**83,297**

WPWMA EIR
Construction Emissions - Proposed Project Exhaust Emissions
Plan Concept 1

HHW Storage

Construction Period:	01.01.2029	to		
Number of workers:		Duration (weeks):		

Off Road Equipment Type	Area Size	Number (ea)	Daily Hours	Annual Days Equipment Used
Demolition				
Scraper - CAT 657				
Water Truck - 4000 gal, 3 axle, 58000 gvw				
Site Preparation (1 ac)	***1 ac***	***2***	***16***	***2***
Graders	1	1	8	2
Tractors/Loaders/Backhoes	1	1	8	2
Rubber Tired Dozers	1	0	0	0
Scrapers	1	0	0	0
Grading (1 ac)	***1 ac***	***4***	***21***	***4***
Rubber Tired Dozers	1	1	1	4
Concrete/Industrial Saws	1	1	8	4
Tractors/Loaders/Backhoes	1	2	6	4
Graders	1	0	0	0
Excavators	1	0	0	0
Scrapers	1	0	0	0
Building Construction (1 ac)	***1 ac***	***5***	***32***	***200***
Cranes	1	1	4	200
Forklifts	1	2	6	200
Tractors/Loaders/Backhoes	1	2	8	200
Welders	1	0	0	0
Generator Sets	1	0	0	0
Paving - Asphalt (0 ac)	***0 ac***	***0***	***0***	***0***
Pavers	0	0	0	0
Cement and Mortar Mixers	0	0	0	0
Rollers	0	0	0	0
Tractors/Loaders/Backhoes	0	0	0	0
Paving Equipment	0	0	0	0
Paving - Concrete (0 ac)	***0 ac***	***0***	***0***	***0***
Pavers	0	0	0	0
Cement and Mortar Mixers	0	0	0	0
Rollers	0	0	0	0
Tractors/Loaders/Backhoes	0	0	0	0
Paving Equipment	0	0	0	0
Site Preparation - Pond (0 ac)	***0 ac***	***0***	***0***	***0***
Graders	0	0	0	0
Tractors/Loaders/Backhoes	0	0	0	0
Rubber Tired Dozers	0	0	0	0
Scrapers	0	0	0	0
Excavation (0 cy)	***0 cy***	***0***	***0***	***0***
Scrapers	0	0	0	0
Rubber Tired Dozers	0	0	0	0
Off-Highway Trucks	0	0	0	0
Other General Industrial Equipment	0	0	0	0

Area Size Reference Table	Size	Unit
Site Preparation	1	ac
Grading	1	ac
Building Construction	1	ac
Paving - Asphalt	0	ac
Paving - Concrete	0	ac
Site Preparation - Pond	0	ac
Excavation	0	cy

WPWMA EIR
Construction Emissions - Proposed Project Exhaust Emissions

HHW Storage

Emission Factors					Emissions Factor (g/bhp-hr)								
Equipment Type	HorsePower	Load Factor	Construction Year	Year+Equipment Type+HorsePower	CO	NOX	PM10	PM2.5	ROG	TOG	SO2	CO2	CH4
Demolition													
Site Preparation (1 ac)													
Graders	187	0,41	2029	2025Graders250	2,20E+00	2,60E-01	8,00E-03	8,00E-03	6,00E-02	2,74E-01	5,00E-03	4,73E+02	1,53E-01
Tractors/Loaders/Backhoes	97	0,37	2029	2025Tractors/Loaders/Backhoes120	3,70E+00	2,60E-01	8,00E-03	8,00E-03	6,00E-02	2,48E-01	5,00E-03	4,77E+02	1,54E-01
Rubber Tired Dozers													
Scrapers													
Grading (1 ac)													
Rubber Tired Dozers	247	0,4	2029	2025Rubber Tired Dozers250	2,20E+00	2,60E-01	8,00E-03	8,00E-03	6,00E-02	4,43E-01	5,00E-03	4,75E+02	1,53E-01
Concrete/Industrial Saws	81	0,73	2029	2025Concrete/Industrial Saws120	3,70E+00	2,60E-01	8,00E-03	8,00E-03	6,00E-02	2,85E+00	6,00E-03	5,68E+02	2,50E-02
Tractors/Loaders/Backhoes	97	0,37	2029	2025Tractors/Loaders/Backhoes120	3,70E+00	2,60E-01	8,00E-03	8,00E-03	6,00E-02	2,48E-01	5,00E-03	4,77E+02	1,54E-01
Graders													
Excavators													
Scrapers													
Building Construction (1 ac)													
Cranes	231	0,29	2029	2025Cranes250	2,20E+00	2,60E-01	8,00E-03	8,00E-03	6,00E-02	3,15E-01	5,00E-03	4,73E+02	1,53E-01
Forklifts	89	0,2	2029	2025Forklifts120	3,70E+00	2,60E-01	8,00E-03	8,00E-03	6,00E-02	3,29E-01	5,00E-03	4,72E+02	1,53E-01
Tractors/Loaders/Backhoes	97	0,37	2029	2025Tractors/Loaders/Backhoes120	3,70E+00	2,60E-01	8,00E-03	8,00E-03	6,00E-02	2,48E-01	5,00E-03	4,77E+02	1,54E-01
Welders													
Generator Sets													
Paving - Asphalt (0 ac)													
Pavers													
Cement and Mortar Mixers													
Rollers													
Tractors/Loaders/Backhoes													
Paving Equipment													
Paving - Concrete (0 ac)													
Pavers													
Cement and Mortar Mixers													
Rollers													
Tractors/Loaders/Backhoes													
Paving Equipment													
Site Preparation - Pond (0 ac)													
Graders													
Tractors/Loaders/Backhoes													
Rubber Tired Dozers													
Scrapers													
Excavation (0 cy)													
Scrapers													
Rubber Tired Dozers													
Off-Highway Trucks													
Other General Industrial Equip													

WPWMA EIR
Construction Emissions - Proposed Project Exhaust Emissions

HHW Storage

	Hourly Emissions (lb/hr)									Daily Emissions (lb/day)									Annual Emissions (lb/yr)								
Equipment Type	**TOG**	**ROG**	**CO**	**NOX**	**SO2**	**PM10**	**PM2.5**	**CO2**	**CH4**	**TOG**	**ROG**	**CO**	**NOX**	**SO2**	**PM10**	**PM2.5**	**CO2**	**CH4**	**TOG**	**ROG**	**CO**	**NOX**	**SO2**	**PM10**	**PM2.5**	**CO2**	**CH4**
Demolition																											
Site Preparation (1 ac)																											
Graders	0,046	0,010	0,372	0,044	0,001	0,001	0,001	80,030	0,026	0,370	0,081	2,975	0,352	0,007	0,011	0,011	640,240	0,207	0,740	0,162	5,950	0,703	0,014	0,022	0,022	1 280,5	0,414
Tractors/Loaders/Backhoes	0,020	0,005	0,293	0,021	0,000	0,001	0,001	37,757	0,012	0,157	0,038	2,342	0,165	0,003	0,005	0,005	302,056	0,097	0,314	0,076	4,684	0,329	0,006	0,010	0,010	604,1	0,195
Rubber Tired Dozers																											
Scrapers																											
Grading (1 ac)																											
Rubber Tired Dozers	0,096	0,013	0,479	0,057	0,001	0,002	0,002	103,370	0,033	0,096	0,013	0,479	0,057	0,001	0,002	0,002	103,370	0,033	0,386	0,052	1,917	0,227	0,004	0,007	0,007	413,5	0,133
Concrete/Industrial Saws	0,371	0,008	0,482	0,034	0,001	0,001	0,001	74,083	0,003	2,971	0,063	3,859	0,271	0,006	0,008	0,008	592,666	0,026	11,885	0,250	15,435	1,085	0,025	0,033	0,033	2 370,7	0,104
Tractors/Loaders/Backhoes	0,039	0,009	0,586	0,041	0,001	0,001	0,001	75,514	0,024	0,236	0,057	3,513	0,247	0,005	0,008	0,008	453,084	0,146	0,943	0,228	14,052	0,987	0,019	0,030	0,030	1 812,3	0,585
Graders																											
Excavators																											
Scrapers																											
Building Construction (1 ac)																											
Cranes	0,047	0,009	0,325	0,038	0,001	0,001	0,001	69,853	0,023	0,186	0,035	1,300	0,154	0,003	0,005	0,005	279,413	0,090	37,227	7,089	259,931	30,719	0,591	0,945	0,945	55 882,7	18,077
Forklifts	0,026	0,005	0,290	0,020	0,000	0,001	0,001	37,008	0,012	0,155	0,028	1,742	0,122	0,002	0,004	0,004	222,046	0,072	31,022	5,651	348,472	24,487	0,471	0,753	0,753	44 409,3	14,410
Tractors/Loaders/Backhoes	0,039	0,009	0,586	0,041	0,001	0,001	0,001	75,514	0,024	0,314	0,076	4,684	0,329	0,006	0,010	0,010	604,112	0,195	62,897	15,192	936,828	65,831	1,266	2,026	2,026	120 822,4	38,992
Welders																											
Generator Sets																											
Paving - Asphalt (0 ac)																											
Pavers																											
Cement and Mortar Mixers																											
Rollers																											
Tractors/Loaders/Backhoes																											
Paving Equipment																											
Paving - Concrete (0 ac)																											
Pavers																											
Cement and Mortar Mixers																											
Rollers																											
Tractors/Loaders/Backhoes																											
Paving Equipment																											
Site Preparation - Pond (0 ac)																											
Graders																											
Tractors/Loaders/Backhoes																											
Rubber Tired Dozers																											
Scrapers																											
Excavation (0 cy)																											
Scrapers																											
Rubber Tired Dozers																											
Off-Highway Trucks																											
Other General Industrial Equip																											

Total per Phase																											
Site Preparation	0,066	0,015	0,665	0,065	0,001	0,002	0,002	117,787	0,038	0,527	0,119	5,317	0,516	0,010	0,016	0,016	942,296	0,304	1,055	0,238	10,634	1,032	0,020	0,032	0,032	1 884,6	0,609
Grading	0,507	0,030	1,547	0,132	0,003	0,004	0,004	252,967	0,061	3,303	0,133	7,851	0,575	0,012	0,018	0,018	1 149,120	0,206	13,214	0,530	31,404	2,299	0,048	0,071	0,071	4 596,5	0,822
Building Construction	0,112	0,023	1,201	0,100	0,002	0,003	0,003	182,375	0,059	0,656	0,140	7,726	0,605	0,012	0,019	0,019	1 105,572	0,357	131,146	27,932	1 545,230	121,037	2,328	3,724	3,724	221 114,4	71,479
Paving - Asphalt	0,000	0,000	0,000	0,000	0,000	0,000	0,000	0,000	0,000	0,000	0,000	0,000	0,000	0,000	0,000	0,000	0,000	0,000	0,000	0,000	0,000	0,000	0,000	0,000	0,000	0,0	0,000
Paving - Concrete	0,000	0,000	0,000	0,000	0,000	0,000	0,000	0,000	0,000	0,000	0,000	0,000	0,000	0,000	0,000	0,000	0,000	0,000	0,000	0,000	0,000	0,000	0,000	0,000	0,000	0,0	0,000
Site Preparation - Pond	0,000	0,000	0,000	0,000	0,000	0,000	0,000	0,000	0,000	0,000	0,000	0,000	0,000	0,000	0,000	0,000	0,000	0,000	0,000	0,000	0,000	0,000	0,000	0,000	0,000	0,0	0,000
Excavation	0,000	0,000	0,000	0,000	0,000	0,000	0,000	0,000	0,000	0,000	0,000	0,000	0,000	0,000	0,000	0,000	0,000	0,000	0,000	0,000	0,000	0,000	0,000	0,000	0,000	0,0	0,000
Total																			**145,414**	**28,700**	**1 587,268**	**124,368**	**2,396**	**3,827**	**3,827**	**227 595,5**	**72,910**

WPWMA EIR
Construction Emissions - Proposed Project Exhaust Emissions
Plan Concept 1

Primary Maintenance Facility

Construction Period:	01.01.2033	to		
Number of workers:		Duration (weeks):		

Off Road Equipment Type	Area Size	Number (ea)	Daily Hours	Annual Days Equipment Used
Demolition				
Scraper - CAT 657				
Water Truck - 4000 gal, 3 axle, 58000 gvw				
Site Preparation (2 ac)	***2 ac***	***3***	***23***	***3***
Graders	2	1	8	3
Tractors/Loaders/Backhoes	2	1	8	3
Rubber Tired Dozers	2	1	7	3
Scrapers	2	0	0	0
Grading (2 ac)	***2 ac***	***3***	***19***	***6***
Rubber Tired Dozers	2	1	6	6
Concrete/Industrial Saws	2	0	0	0
Tractors/Loaders/Backhoes	2	1	7	6
Graders	2	1	6	6
Excavators	2	0	0	0
Scrapers	2	0	0	0
Building Construction (1 ac)	***1 ac***	***5***	***32***	***200***
Cranes	1	1	4	200
Forklifts	1	2	6	200
Tractors/Loaders/Backhoes	1	2	8	200
Welders	1	0	0	0
Generator Sets	1	0	0	0
Paving - Asphalt (2 ac)	***2 ac***	***5***	***35***	***10***
Pavers	2	1	6	10
Cement and Mortar Mixers	2	1	6	10
Rollers	2	1	7	10
Tractors/Loaders/Backhoes	2	1	8	10
Paving Equipment	2	1	8	10
Paving - Concrete (1 ac)	***1 ac***	***7***	***45***	***10***
Pavers	1	1	7	10
Cement and Mortar Mixers	1	4	6	10
Rollers	1	1	7	10
Tractors/Loaders/Backhoes	1	1	7	10
Paving Equipment	1	0	0	0
Site Preparation - Pond (0 ac)	***0 ac***	***0***	***0***	***0***
Graders	0	0	0	0
Tractors/Loaders/Backhoes	0	0	0	0
Rubber Tired Dozers	0	0	0	0
Scrapers	0	0	0	0
Excavation (0 cy)	***0 cy***	***0***	***0***	***0***
Scrapers	0	0	0	0
Rubber Tired Dozers	0	0	0	0
Off-Highway Trucks	0	0	0	0
Other General Industrial Equipment	0	0	0	0

Area Size Reference Table	Size	Unit
Site Preparation	2	ac
Grading	2	ac
Building Construction	1	ac
Paving - Asphalt	2	ac
Paving - Concrete	1	ac
Site Preparation - Pond	0	ac
Excavation	0	cy

WPWMA EIR
Construction Emissions - Proposed Project Exhaust Emissions

Primary Maintenance Facility

Emission Factors					Emissions Factor (g/bhp-hr)								
Equipment Type	HorsePower	Load Factor	Construction Year	Year+Equipment Type+HorsePower	CO	NOX	PM10	PM2.5	ROG	TOG	SO2	CO2	CH4
Demolition													
Site Preparation (2 ac)													
Graders	187	0,41	2033	2030Graders250	2,20E+00	2,60E-01	8,00E-03	8,00E-03	6,00E-02	3,11E+00	6,00E-03	5,68E+02	1,90E-02
Tractors/Loaders/Backhoes	97	0,37	2033	2030Tractors/Loaders/Backhoes120	3,70E+00	2,60E-01	8,00E-03	8,00E-03	6,00E-02	2,29E+00	6,00E-03	5,68E+02	2,40E-02
Rubber Tired Dozers	247	0,4	2033	2030Rubber Tired Dozers250	2,20E+00	2,60E-01	8,00E-03	8,00E-03	6,00E-02	1,56E+00	6,00E-03	5,68E+02	3,00E-02
Scrapers													
Grading (2 ac)													
Rubber Tired Dozers	247	0,4	2033	2030Rubber Tired Dozers250	2,20E+00	2,60E-01	8,00E-03	8,00E-03	6,00E-02	1,56E+00	6,00E-03	5,68E+02	3,00E-02
Concrete/Industrial Saws													
Tractors/Loaders/Backhoes	97	0,37	2033	2030Tractors/Loaders/Backhoes120	3,70E+00	2,60E-01	8,00E-03	8,00E-03	6,00E-02	2,29E+00	6,00E-03	5,68E+02	2,40E-02
Graders	187	0,41	2033	2030Graders250	2,20E+00	2,60E-01	8,00E-03	8,00E-03	6,00E-02	3,11E+00	6,00E-03	5,68E+02	1,90E-02
Excavators													
Scrapers													
Building Construction (1 ac)													
Cranes	231	0,29	2033	2030Cranes250	2,20E+00	2,60E-01	8,00E-03	8,00E-03	6,00E-02	2,84E+00	6,00E-03	5,68E+02	2,00E-02
Forklifts	89	0,2	2033	2030Forklifts120	3,70E+00	2,60E-01	8,00E-03	8,00E-03	6,00E-02	1,48E+00	6,00E-03	5,68E+02	2,50E-02
Tractors/Loaders/Backhoes	97	0,37	2033	2030Tractors/Loaders/Backhoes120	3,70E+00	2,60E-01	8,00E-03	8,00E-03	6,00E-02	2,29E+00	6,00E-03	5,68E+02	2,40E-02
Welders													
Generator Sets													
Paving - Asphalt (2 ac)													
Pavers	130	0,42	2033	2030Pavers175	2,20E+00	2,60E-01	8,00E-03	8,00E-03	6,00E-02	5,58E+00	6,00E-03	5,68E+02	2,70E-02
Cement and Mortar Mixers	9	0,56	2033	2030Cement and Mortar Mixers15	4,10E+00	2,75E+00	8,00E-03	8,00E-03	1,20E-01	1,08E+00	8,00E-03	5,68E+02	5,90E-02
Rollers	80	0,38	2033	2030Rollers120	3,70E+00	2,60E-01	8,00E-03	8,00E-03	6,00E-02	6,53E+00	6,00E-03	5,68E+02	2,70E-02
Tractors/Loaders/Backhoes	97	0,37	2033	2030Tractors/Loaders/Backhoes120	3,70E+00	2,60E-01	8,00E-03	8,00E-03	6,00E-02	2,29E+00	6,00E-03	5,68E+02	2,40E-02
Paving Equipment	132	0,36	2033	2030Paving Equipment175	2,20E+00	2,60E-01	8,00E-03	8,00E-03	6,00E-02	5,53E+00	6,00E-03	5,68E+02	2,60E-02
Paving - Concrete (1 ac)													
Pavers	130	0,42	2033	2030Pavers175	2,20E+00	2,60E-01	8,00E-03	8,00E-03	6,00E-02	5,58E+00	6,00E-03	5,68E+02	2,70E-02
Cement and Mortar Mixers	9	0,56	2033	2030Cement and Mortar Mixers15	4,10E+00	2,75E+00	8,00E-03	8,00E-03	1,20E-01	1,08E+00	8,00E-03	5,68E+02	5,90E-02
Rollers	80	0,38	2033	2030Rollers120	3,70E+00	2,60E-01	8,00E-03	8,00E-03	6,00E-02	6,53E+00	6,00E-03	5,68E+02	2,70E-02
Tractors/Loaders/Backhoes	97	0,37	2033	2030Tractors/Loaders/Backhoes120	3,70E+00	2,60E-01	8,00E-03	8,00E-03	6,00E-02	2,29E+00	6,00E-03	5,68E+02	2,40E-02
Paving Equipment													
Site Preparation - Pond (0 ac)													
Graders													
Tractors/Loaders/Backhoes													
Rubber Tired Dozers													
Scrapers													
Excavation (0 cy)													
Scrapers													
Rubber Tired Dozers													
Off-Highway Trucks													
Other General Industrial Equip													

WPWMA EIR
Construction Emissions - Proposed Project Exhaust Emissions

Primary Maintenance Facility

	Hourly Emissions (lb/hr)									Daily Emissions (lb/day)									Annual Emissions (lb/yr)								
Equipment Type	**TOG**	**ROG**	**CO**	**NOX**	**SO2**	**PM10**	**PM2.5**	**CO2**	**CH4**	**TOG**	**ROG**	**CO**	**NOX**	**SO2**	**PM10**	**PM2.5**	**CO2**	**CH4**	**TOG**	**ROG**	**CO**	**NOX**	**SO2**	**PM10**	**PM2.5**	**CO2**	**CH4**
Demolition																											
Site Preparation (2 ac)																											
Graders	0,526	0,010	0,372	0,044	0,001	0,001	0,001	96,059	0,003	4,211	0,081	2,975	0,352	0,008	0,011	0,011	768,470	0,026	12,633	0,243	8,925	1,055	0,024	0,032	0,032	2 305,4	0,077
Tractors/Loaders/Backhoes	0,181	0,005	0,293	0,021	0,000	0,001	0,001	44,966	0,002	1,446	0,038	2,342	0,165	0,004	0,005	0,005	359,729	0,015	4,339	0,114	7,026	0,494	0,011	0,015	0,015	1 079,2	0,046
Rubber Tired Dozers	0,339	0,013	0,479	0,057	0,001	0,002	0,002	123,785	0,007	2,372	0,091	3,354	0,396	0,009	0,012	0,012	866,496	0,046	7,117	0,274	10,063	1,189	0,027	0,037	0,037	2 599,5	0,137
Scrapers																											
Grading (2 ac)																											
Rubber Tired Dozers	0,339	0,013	0,479	0,057	0,001	0,002	0,002	123,785	0,007	2,034	0,078	2,875	0,340	0,008	0,010	0,010	742,711	0,039	12,201	0,470	17,251	2,039	0,047	0,063	0,063	4 456,3	0,235
Concrete/Industrial Saws																											
Tractors/Loaders/Backhoes	0,181	0,005	0,293	0,021	0,000	0,001	0,001	44,966	0,002	1,266	0,033	2,049	0,144	0,003	0,004	0,004	314,763	0,013	7,594	0,199	12,296	0,864	0,020	0,027	0,027	1 888,6	0,080
Graders	0,526	0,010	0,372	0,044	0,001	0,001	0,001	96,059	0,003	3,158	0,061	2,231	0,264	0,006	0,008	0,008	576,353	0,019	18,949	0,365	13,387	1,582	0,037	0,049	0,049	3 458,1	0,116
Excavators																											
Scrapers																											
Building Construction (1 ac)																											
Cranes	0,419	0,009	0,325	0,038	0,001	0,001	0,001	83,931	0,003	1,675	0,035	1,300	0,154	0,004	0,005	0,005	335,723	0,012	334,956	7,089	259,931	30,719	0,709	0,945	0,945	67 144,7	2,363
Forklifts	0,116	0,005	0,290	0,020	0,000	0,001	0,001	44,603	0,002	0,697	0,028	1,742	0,122	0,003	0,004	0,004	267,616	0,012	139,389	5,651	348,472	24,487	0,565	0,753	0,753	53 523,3	2,355
Tractors/Loaders/Backhoes	0,362	0,009	0,586	0,041	0,001	0,001	0,001	89,932	0,004	2,893	0,076	4,684	0,329	0,008	0,010	0,010	719,457	0,030	578,554	15,192	936,828	65,831	1,519	2,026	2,026	143 891,4	6,077
Welders																											
Generator Sets																											
Paving - Asphalt (2 ac)																											
Pavers	0,671	0,007	0,265	0,031	0,001	0,001	0,001	68,408	0,003	4,028	0,043	1,589	0,188	0,004	0,006	0,006	410,445	0,020	40,279	0,433	15,889	1,878	0,043	0,058	0,058	4 104,5	0,195
Cement and Mortar Mixers	0,012	0,001	0,046	0,031	0,000	0,000	0,000	6,315	0,001	0,072	0,008	0,273	0,183	0,001	0,001	0,001	37,887	0,004	0,717	0,080	2,733	1,833	0,005	0,005	0,005	378,9	0,039
Rollers	0,438	0,004	0,248	0,017	0,000	0,001	0,001	38,088	0,002	3,063	0,028	1,736	0,122	0,003	0,004	0,004	266,614	0,013	30,626	0,281	17,358	1,220	0,028	0,038	0,038	2 666,1	0,127
Tractors/Loaders/Backhoes	0,181	0,005	0,293	0,021	0,000	0,001	0,001	44,966	0,002	1,446	0,038	2,342	0,165	0,004	0,005	0,005	359,729	0,015	14,464	0,380	23,421	1,646	0,038	0,051	0,051	3 597,3	0,152
Paving Equipment	0,579	0,006	0,230	0,027	0,001	0,001	0,001	59,537	0,003	4,631	0,050	1,844	0,218	0,005	0,007	0,007	476,297	0,022	46,306	0,503	18,438	2,179	0,050	0,067	0,067	4 763,0	0,218
Paving - Concrete (1 ac)																											
Pavers	0,671	0,007	0,265	0,031	0,001	0,001	0,001	68,408	0,003	4,699	0,051	1,854	0,219	0,005	0,007	0,007	478,853	0,023	46,992	0,506	18,537	2,191	0,051	0,067	0,067	4 788,5	0,228
Cement and Mortar Mixers	0,048	0,005	0,182	0,122	0,000	0,000	0,000	25,258	0,003	0,287	0,032	1,093	0,733	0,002	0,002	0,002	151,549	0,016	2,867	0,320	10,934	7,333	0,021	0,021	0,021	1 515,5	0,157
Rollers	0,438	0,004	0,248	0,017	0,000	0,001	0,001	38,088	0,002	3,063	0,028	1,736	0,122	0,003	0,004	0,004	266,614	0,013	30,626	0,281	17,358	1,220	0,028	0,038	0,038	2 666,1	0,127
Tractors/Loaders/Backhoes	0,181	0,005	0,293	0,021	0,000	0,001	0,001	44,966	0,002	1,266	0,033	2,049	0,144	0,003	0,004	0,004	314,763	0,013	12,656	0,332	20,493	1,440	0,033	0,044	0,044	3 147,6	0,133
Paving Equipment																											
Site Preparation - Pond (0 ac)																											
Graders																											
Tractors/Loaders/Backhoes																											
Rubber Tired Dozers																											
Scrapers																											
Excavation (0 cy)																											
Scrapers																											
Rubber Tired Dozers																											
Off-Highway Trucks																											
Other General Industrial Equip																											

Total per Phase																											
Site Preparation	1,046	0,028	1,144	0,121	0,003	0,004	0,004	264,810	0,012	8,030	0,211	8,671	0,913	0,021	0,028	0,028	1 994,695	0,087	24,089	0,632	26,014	2,738	0,063	0,084	0,084	5 984,1	0,260
Grading	1,046	0,028	1,144	0,121	0,003	0,004	0,004	264,810	0,012	6,457	0,172	7,156	0,747	0,017	0,023	0,023	1 633,826	0,072	38,744	1,035	42,934	4,485	0,103	0,138	0,138	9 803,0	0,431
Building Construction	0,896	0,023	1,201	0,100	0,002	0,003	0,003	218,466	0,009	5,264	0,140	7,726	0,605	0,014	0,019	0,019	1 322,797	0,054	1 052,899	27,932	1 545,230	121,037	2,793	3,724	3,724	264 559,4	10,794
Paving - Asphalt	1,880	0,024	1,082	0,127	0,002	0,003	0,003	217,313	0,010	13,239	0,168	7,784	0,876	0,017	0,022	0,022	1 550,972	0,073	132,391	1,677	77,840	8,756	0,165	0,218	0,218	15 509,7	0,731
Paving - Concrete	1,337	0,021	0,988	0,192	0,002	0,002	0,002	176,720	0,010	9,314	0,144	6,732	1,218	0,013	0,017	0,017	1 211,779	0,064	93,141	1,439	67,322	12,184	0,133	0,171	0,171	12 117,8	0,644
Site Preparation - Pond	0,000	0,000	0,000	0,000	0,000	0,000	0,000	0,000	0,000	0,000	0,000	0,000	0,000	0,000	0,000	0,000	0,000	0,000	0,000	0,000	0,000	0,000	0,000	0,000	0,000	0,0	0,000
Excavation	0,000	0,000	0,000	0,000	0,000	0,000	0,000	0,000	0,000	0,000	0,000	0,000	0,000	0,000	0,000	0,000	0,000	0,000	0,000	0,000	0,000	0,000	0,000	0,000	0,000	0,0	0,000
Total																			**1 341,263**	**32,715**	**1 759,340**	**149,200**	**3,258**	**4,335**	**4,335**	**307 973,9**	**12,860**

WPWMA EIR
Construction Emissions - Proposed Project Exhaust Emissions
Plan Concept 1

Stockpile Relocation

Construction Period:	01.01.2033	to		
Number of workers:		Duration (weeks):		

Off Road Equipment Type	Area Size	Number (ea)	Daily Hours	Annual Days Equipment Used
Demolition				
Scraper - CAT 657				
Water Truck - 4000 gal, 3 axle, 58000 gvw				
Site Preparation (0 ac)	***0 ac***	***0***	***0***	***0***
Graders	0	0	0	0
Tractors/Loaders/Backhoes	0	0	0	0
Rubber Tired Dozers	0	0	0	0
Scrapers	0	0	0	0
Grading (0 ac)	***0 ac***	***0***	***0***	***0***
Rubber Tired Dozers	0	0	0	0
Concrete/Industrial Saws	0	0	0	0
Tractors/Loaders/Backhoes	0	0	0	0
Graders	0	0	0	0
Excavators	0	0	0	0
Scrapers	0	0	0	0
Building Construction (0 ac)	***0 ac***	***0***	***0***	***0***
Cranes	0	0	0	0
Forklifts	0	0	0	0
Tractors/Loaders/Backhoes	0	0	0	0
Welders	0	0	0	0
Generator Sets	0	0	0	0
Paving - Asphalt (0 ac)	***0 ac***	***0***	***0***	***0***
Pavers	0	0	0	0
Cement and Mortar Mixers	0	0	0	0
Rollers	0	0	0	0
Tractors/Loaders/Backhoes	0	0	0	0
Paving Equipment	0	0	0	0
Paving - Concrete (0 ac)	***0 ac***	***0***	***0***	***0***
Pavers	0	0	0	0
Cement and Mortar Mixers	0	0	0	0
Rollers	0	0	0	0
Tractors/Loaders/Backhoes	0	0	0	0
Paving Equipment	0	0	0	0
Site Preparation - Pond (0 ac)	***0 ac***	***0***	***0***	***0***
Graders	0	0	0	0
Tractors/Loaders/Backhoes	0	0	0	0
Rubber Tired Dozers	0	0	0	0
Scrapers	0	0	0	0
Excavation (0 cy)	***0 cy***	***0***	***0***	***0***
Scrapers	0	0	0	0
Rubber Tired Dozers	0	0	0	0
Off-Highway Trucks	0	0	0	0
Other General Industrial Equipment	0	0	0	0
Stockpile Movement (1400000 cy)	***1400000 cy***	***5***	***40***	***260***
Scrapers	1400000	5	8	260

Area Size Reference Table	Size	Unit
Site Preparation	0	ac
Grading	0	ac
Building Construction	0	ac
Paving - Asphalt	0	ac
Paving - Concrete	0	ac
Site Preparation - Pond	0	ac
Excavation	0	cy
Stockpile Movement	1 400 000	cy

WPWMA EIR
Construction Emissions - Proposed Project Exhaust Emissions

Stockpile Relocation

Emission Factors					Emissions Factor (g/bhp-hr)								
Equipment Type	HorsePower	Load Factor	Construction Year	Year+Equipment Type+HorsePower	CO	NOX	PM10	PM2.5	ROG	TOG	SO2	CO2	CH4
Demolition													
Site Preparation (0 ac)													
Graders													
Tractors/Loaders/Backhoes													
Rubber Tired Dozers													
Scrapers													
Grading (0 ac)													
Rubber Tired Dozers													
Concrete/Industrial Saws													
Tractors/Loaders/Backhoes													
Graders													
Excavators													
Scrapers													
Building Construction (0 ac)													
Cranes													
Forklifts													
Tractors/Loaders/Backhoes													
Welders													
Generator Sets													
Paving - Asphalt (0 ac)													
Pavers													
Cement and Mortar Mixers													
Rollers													
Tractors/Loaders/Backhoes													
Paving Equipment													
Paving - Concrete (0 ac)													
Pavers													
Cement and Mortar Mixers													
Rollers													
Tractors/Loaders/Backhoes													
Paving Equipment													
Site Preparation - Pond (0 ac)													
Graders													
Tractors/Loaders/Backhoes													
Rubber Tired Dozers													
Scrapers													
Excavation (0 cy)													
Scrapers													
Rubber Tired Dozers													
Off-Highway Trucks													
Other General Industrial Equip													
Stockpile Movement (1400000 cy)													
Scrapers	367	0,48	2033	2030Scrapers500	2,20E+00	2,60E-01	8,00E-03	8,00E-03	6,00E-02	2,70E+00	5,00E-03	5,68E+02	2,30E-02

WPWMA EIR
Construction Emissions - Proposed Project Exhaust Emissions

Stockpile Relocation

	Hourly Emissions (lb/hr)									Daily Emissions (lb/day)									Annual Emissions (lb/yr)								
Equipment Type	**TOG**	**ROG**	**CO**	**NOX**	**SO2**	**PM10**	**PM2.5**	**CO2**	**CH4**	**TOG**	**ROG**	**CO**	**NOX**	**SO2**	**PM10**	**PM2.5**	**CO2**	**CH4**	**TOG**	**ROG**	**CO**	**NOX**	**SO2**	**PM10**	**PM2.5**	**CO2**	**CH4**
Demolition																											
Site Preparation (0 ac)																											
Graders																											
Tractors/Loaders/Backhoes																											
Rubber Tired Dozers																											
Scrapers																											
Grading (0 ac)																											
Rubber Tired Dozers																											
Concrete/Industrial Saws																											
Tractors/Loaders/Backhoes																											
Graders																											
Excavators																											
Scrapers																											
Building Construction (0 ac)																											
Cranes																											
Forklifts																											
Tractors/Loaders/Backhoes																											
Welders																											
Generator Sets																											
Paving - Asphalt (0 ac)																											
Pavers																											
Cement and Mortar Mixers																											
Rollers																											
Tractors/Loaders/Backhoes																											
Paving Equipment																											
Paving - Concrete (0 ac)																											
Pavers																											
Cement and Mortar Mixers																											
Rollers																											
Tractors/Loaders/Backhoes																											
Paving Equipment																											
Site Preparation - Pond (0 ac)																											
Graders																											
Tractors/Loaders/Backhoes																											
Rubber Tired Dozers																											
Scrapers																											
Excavation (0 cy)																											
Scrapers																											
Rubber Tired Dozers																											
Off-Highway Trucks																											
Other General Industrial Equip																											
Stockpile Movement (1400000 cy)																											
Scrapers	5,237	0,117	4,272	0,505	0,010	0,016	0,016	1 103,542	0,045	41,897	0,932	34,176	4,039	0,078	0,124	0,124	8 828,335	0,357	10 893,218	242,341	8 885,829	1 050,143	20,195	32,312	32,312	2 295 367	92,897

Total per Phase																											
Site Preparation	0,000	0,000	0,000	0,000	0,000	0,000	0,000	0,000	0,000	0,000	0,000	0,000	0,000	0,000	0,000	0,000	0,000	0,000	0,000	0,000	0,000	0,000	0,000	0,000	0,000	0	0,000
Grading	0,000	0,000	0,000	0,000	0,000	0,000	0,000	0,000	0,000	0,000	0,000	0,000	0,000	0,000	0,000	0,000	0,000	0,000	0,000	0,000	0,000	0,000	0,000	0,000	0,000	0	0,000
Building Construction	0,000	0,000	0,000	0,000	0,000	0,000	0,000	0,000	0,000	0,000	0,000	0,000	0,000	0,000	0,000	0,000	0,000	0,000	0,000	0,000	0,000	0,000	0,000	0,000	0,000	0	0,000
Paving - Asphalt	0,000	0,000	0,000	0,000	0,000	0,000	0,000	0,000	0,000	0,000	0,000	0,000	0,000	0,000	0,000	0,000	0,000	0,000	0,000	0,000	0,000	0,000	0,000	0,000	0,000	0	0,000
Paving - Concrete	0,000	0,000	0,000	0,000	0,000	0,000	0,000	0,000	0,000	0,000	0,000	0,000	0,000	0,000	0,000	0,000	0,000	0,000	0,000	0,000	0,000	0,000	0,000	0,000	0,000	0	0,000
Site Preparation - Pond	0,000	0,000	0,000	0,000	0,000	0,000	0,000	0,000	0,000	0,000	0,000	0,000	0,000	0,000	0,000	0,000	0,000	0,000	0,000	0,000	0,000	0,000	0,000	0,000	0,000	0	0,000
Excavation	0,000	0,000	0,000	0,000	0,000	0,000	0,000	0,000	0,000	0,000	0,000	0,000	0,000	0,000	0,000	0,000	0,000	0,000	0,000	0,000	0,000	0,000	0,000	0,000	0,000	0	0,000
Stockpile Movement	5,237	0,117	4,272	0,505	0,010	0,016	0,016	1 103,542	0,045	41,897	0,932	34,176	4,039	0,078	0,124	0,124	8 828,335	0,357	10 893,218	242,341	8 885,829	1 050,143	20,195	32,312	32,312	2 295 367	92,897
Total																			**10 893,218**	**242,341**	**8 885,829**	**1 050,143**	**20,195**	**32,312**	**32,312**	**2 295 367**	**92,897**

WPWMA EIR

Construction Emissions - Proposed Project Exhaust Emissions

	Maximum Daily Emissions (lb/day) - across all construction phases								
Year	TOG	ROG	CO	NOX	SO2	PM10	PM2.5	CO2	CH4
2024	19,784	1,893	72,662	8,922	0,158	0,252	0,252	14 952,512	4,835
2025	6,395	1,227	50,691	5,318	0,102	0,164	0,164	9 697,393	3,133
2028	9,301	2,012	76,152	8,719	0,168	0,268	0,268	15 872,857	5,137
2029	57,451	2,916	128,144	15,077	0,248	0,380	0,380	23 372,301	6,368
2033	55,136	1,143	42,848	5,257	0,099	0,152	0,152	10 823,029	0,444

Total Annual GHG (lb/yr)							
Element	Year	CO2	CH4		Year	CO2	CH4
Public Area	2024	706 686,973	159,001		2024	772 312,302	179,8
Public Area - SW Pond	2024	8 636,089	2,790		2025	951 581,589	307,6
Western Entrance	2024	36 526,733	11,384		2028	2 994 889,564	969,2
Shared Site Utilities	2024	20 462,507	6,609		2029	4 290 553,945	1 129,4
Compost Facility	2025	903 780,151	292,156		2033	2 603 340,994	105,8
Compost Facility - SW Pond	2025	47 801,438	15,428				
Landfill Construction	2028	2 994 889,564	969,230				
Landfill Lining & Partial Closure	2029	3 585 957,897	973,153				
Recovered Materials Storage	2029	477 000,585	83,297				
HHW Storage	2029	227 595,464	72,910				
Primary Maintenance Facility	2033	307 973,926	12,860				
Stockpile Relocation	2033	2 295 367,068	92,897				

Maximum Daily Emissions (lb/day) - across all construction phases										
Element	Year	TOG	ROG	CO	NOX	SO2	PM10	PM2.5	CO2	CH4
Public Area	2024	13,731	0,762	29,822	3,712	0,063	0,102	0,102	6 009,754	1,943
Public Area - SW Pond	2024	2,368	0,461	17,084	1,996	0,038	0,061	0,061	3 638,437	1,177
Western Entrance	2024	1,317	0,211	8,671	1,218	0,018	0,028	0,028	1 665,884	0,538
Shared Site Utilities	2024	2,368	0,461	17,084	1,996	0,038	0,061	0,061	3 638,437	1,177
Compost Facility	2025	3,453	0,762	29,822	3,300	0,063	0,102	0,102	6 008,286	1,943
Compost Facility - SW Pond	2025	2,943	0,466	20,869	2,017	0,039	0,062	0,062	3 689,107	1,190
Landfill Construction	2028	9,301	2,012	76,152	8,719	0,168	0,268	0,268	15 872,857	5,137
Landfill Lining & Partial Closure	2029	41,338	2,483	107,169	10,760	0,214	0,331	0,331	20 221,026	5,473
Recovered Materials Storage	2029	12,809	0,293	13,124	3,712	0,022	0,030	0,030	2 002,154	0,538
HHW Storage	2029	3,303	0,140	7,851	0,605	0,012	0,019	0,019	1 149,120	0,357
Primary Maintenance Facility	2033	13,239	0,211	8,671	1,218	0,021	0,028	0,028	1 994,695	0,087
Stockpile Relocation	2033	41,897	0,932	34,176	4,039	0,078	0,124	0,124	8 828,335	0,357

Note: Assumes element and associated stormwater pond are built concurrently (excavation is associated with pond construction), as opposed to sequentially.

WPWMA EIR
Construction Emissions - Proposed Project Exhaust Emissions
Plan Concept 2

Assumptions:

Construction Schedule:	4	weeks/month
	5	days/week
	8	hrs/day
Unit Conversion:	453,592	g/lb

= manual input
= max value (conditional formatting)

Additional travel other than equipment operation is minimal and not included in this analysis.
Since construction contractors would be large operators of diesel off-road equipment, all off-road diesel equipment would be compliant with CARB requirements at the time of construction.
After 2020, all off-road diesel construction equipment would meet Tier 4 Final emission standards.

Main Entrance

Construction Period:	01.01.2024	to	
Number of workers:		Duration (weeks):	

Off Road Equipment Type	Area Size	Number (ea)	Daily Hours	Annual Days Equipment Used
Demolition	***1 ac***	***4***	***21***	***20***
Excavators	1	0	0	0
Rubber Tired Dozers	1	1	1	20
Concrete/Industrial Saws	1	1	8	20
Tractors/Loaders/Backhoes	1	2	6	20
Site Preparation (2 ac)	***2 ac***	***3***	***23***	***3***
Graders	2	1	8	3
Tractors/Loaders/Backhoes	2	1	8	3
Rubber Tired Dozers	2	1	7	3
Scrapers	2	0	0	0
Grading (2 ac)	***2 ac***	***3***	***19***	***6***
Rubber Tired Dozers	2	1	6	6
Concrete/Industrial Saws	2	0	0	0
Tractors/Loaders/Backhoes	2	1	7	6
Graders	2	1	6	6
Excavators	2	0	0	0
Scrapers	2	0	0	0
Building Construction (0 ac)	***0 ac***	***0***	***0***	***0***
Cranes	0	0	0	0
Forklifts	0	0	0	0
Tractors/Loaders/Backhoes	0	0	0	0
Welders	0	0	0	0
Generator Sets	0	0	0	0
Paving - Asphalt (2 ac)	***2 ac***	***5***	***35***	***10***
Pavers	2	1	6	10
Cement and Mortar Mixers	2	1	6	10
Rollers	2	1	7	10
Tractors/Loaders/Backhoes	2	1	8	10
Paving Equipment	2	1	8	10
Paving - Concrete (1 ac)	***1 ac***	***7***	***45***	***10***
Pavers	1	1	7	10
Cement and Mortar Mixers	1	4	6	10
Rollers	1	1	7	10
Tractors/Loaders/Backhoes	1	1	7	10
Paving Equipment	1	0	0	0
Site Preparation - Pond (0 ac)	***0 ac***	***0***	***0***	***0***
Graders	0	0	0	0
Tractors/Loaders/Backhoes	0	0	0	0
Rubber Tired Dozers	0	0	0	0
Scrapers	0	0	0	0
Excavation (0 cy)	***0 cy***	***0***	***0***	***0***
Scrapers	0	0	0	0
Rubber Tired Dozers	0	0	0	0
Off-Highway Trucks	0	0	0	0
Other General Industrial Equipment	0	0	0	0

Area Size Reference Table	Size	Unit
Demolition	1	ac
Site Preparation	2	ac
Grading	2	ac
Building Construction	0	ac
Paving - Asphalt	2	ac
Paving - Concrete	1	ac
Site Preparation - Pond	0	ac
Excavation	0	cy

WPWMA EIR
Construction Emissions - Proposed Project Exhaust Emissions

Main Entrance

Emission Factors					Emissions Factor (g/bhp-hr)								
Equipment Type	**HorsePower**	**Load Factor**	**Construction Year**	**Year+Equipment Type+HorsePower**	**CO**	**NOX**	**PM10**	**PM2.5**	**ROG**	**TOG**	**SO2**	**CO2**	**CH4**
Demolition													
Excavators													
Rubber Tired Dozers	247	0,4	2024	2024Rubber Tired Dozers250	2,20E+00	2,60E-01	8,00E-03	8,00E-03	6,00E-02	4,75E-01	5,00E-03	4,75E+02	1,53E-01
Concrete/Industrial Saws	81	0,73	2024	2024Concrete/Industrial Saws120	3,70E+00	2,60E-01	8,00E-03	8,00E-03	6,00E-02	3,02E+00	6,00E-03	5,68E+02	2,70E-02
Tractors/Loaders/Backhoes	97	0,37	2024	2024Tractors/Loaders/Backhoes120	3,70E+00	2,60E-01	8,00E-03	8,00E-03	6,00E-02	2,71E-01	5,00E-03	4,77E+02	1,54E-01
Site Preparation (2 ac)													
Graders	187	0,41	2024	2024Graders250	2,20E+00	2,60E-01	8,00E-03	8,00E-03	6,00E-02	3,12E-01	5,00E-03	4,74E+02	1,53E-01
Tractors/Loaders/Backhoes	97	0,37	2024	2024Tractors/Loaders/Backhoes120	3,70E+00	2,60E-01	8,00E-03	8,00E-03	6,00E-02	2,71E-01	5,00E-03	4,77E+02	1,54E-01
Rubber Tired Dozers	247	0,4	2024	2024Rubber Tired Dozers250	2,20E+00	2,60E-01	8,00E-03	8,00E-03	6,00E-02	4,75E-01	5,00E-03	4,75E+02	1,53E-01
Scrapers													
Grading (2 ac)													
Rubber Tired Dozers	247	0,4	2024	2024Rubber Tired Dozers250	2,20E+00	2,60E-01	8,00E-03	8,00E-03	6,00E-02	4,75E-01	5,00E-03	4,75E+02	1,53E-01
Concrete/Industrial Saws													
Tractors/Loaders/Backhoes	97	0,37	2024	2024Tractors/Loaders/Backhoes120	3,70E+00	2,60E-01	8,00E-03	8,00E-03	6,00E-02	2,71E-01	5,00E-03	4,77E+02	1,54E-01
Graders	187	0,41	2024	2024Graders250	2,20E+00	2,60E-01	8,00E-03	8,00E-03	6,00E-02	3,12E-01	5,00E-03	4,74E+02	1,53E-01
Excavators													
Scrapers													
Building Construction (0 ac)													
Cranes													
Forklifts													
Tractors/Loaders/Backhoes													
Welders													
Generator Sets													
Paving - Asphalt (2 ac)													
Pavers	130	0,42	2024	2024Pavers175	2,20E+00	2,60E-01	8,00E-03	8,00E-03	6,00E-02	2,27E-01	5,00E-03	4,73E+02	1,53E-01
Cement and Mortar Mixers	9	0,56	2024	2024Cement and Mortar Mixers15	4,10E+00	2,75E+00	8,00E-03	8,00E-03	1,20E-01	1,08E+00	8,00E-03	5,68E+02	5,90E-02
Rollers	80	0,38	2024	2024Rollers120	3,70E+00	2,60E-01	8,00E-03	8,00E-03	6,00E-02	3,23E-01	5,00E-03	4,74E+02	1,53E-01
Tractors/Loaders/Backhoes	97	0,37	2024	2024Tractors/Loaders/Backhoes120	3,70E+00	2,60E-01	8,00E-03	8,00E-03	6,00E-02	2,71E-01	5,00E-03	4,77E+02	1,54E-01
Paving Equipment	132	0,36	2024	2024Paving Equipment175	2,20E+00	2,60E-01	8,00E-03	8,00E-03	6,00E-02	2,34E-01	5,00E-03	4,71E+02	1,52E-01
Paving - Concrete (1 ac)													
Pavers	130	0,42	2024	2024Pavers175	2,20E+00	2,60E-01	8,00E-03	8,00E-03	6,00E-02	2,27E-01	5,00E-03	4,73E+02	1,53E-01
Cement and Mortar Mixers	9	0,56	2024	2024Cement and Mortar Mixers15	4,10E+00	2,75E+00	8,00E-03	8,00E-03	1,20E-01	1,08E+00	8,00E-03	5,68E+02	5,90E-02
Rollers	80	0,38	2024	2024Rollers120	3,70E+00	2,60E-01	8,00E-03	8,00E-03	6,00E-02	3,23E-01	5,00E-03	4,74E+02	1,53E-01
Tractors/Loaders/Backhoes	97	0,37	2024	2024Tractors/Loaders/Backhoes120	3,70E+00	2,60E-01	8,00E-03	8,00E-03	6,00E-02	2,71E-01	5,00E-03	4,77E+02	1,54E-01
Paving Equipment													
Site Preparation - Pond (0 ac)													
Graders													
Tractors/Loaders/Backhoes													
Rubber Tired Dozers													
Scrapers													
Excavation (0 cy)													
Scrapers													
Rubber Tired Dozers													
Off-Highway Trucks													
Other General Industrial Equipr													

WPWMA EIR
Construction Emissions - Proposed Project Exhaust Emissions

Main Entrance

	Hourly Emissions (lb/hr)									Daily Emissions (lb/day)									Annual Emissions (lb/yr)								
Equipment Type	**TOG**	**ROG**	**CO**	**NOX**	**SO2**	**PM10**	**PM2.5**	**CO2**	**CH4**	**TOG**	**ROG**	**CO**	**NOX**	**SO2**	**PM10**	**PM2.5**	**CO2**	**CH4**	**TOG**	**ROG**	**CO**	**NOX**	**SO2**	**PM10**	**PM2.5**	**CO2**	**CH4**
Demolition																											
Excavators																											
Rubber Tired Dozers	0,103	0,013	0,479	0,057	0,001	0,002	0,002	103,373	0,033	0,103	0,013	0,479	0,057	0,001	0,002	0,002	103,373	0,033	2,068	0,261	9,584	1,133	0,022	0,035	0,035	2 067,454	0,667
Concrete/Industrial Saws	0,394	0,008	0,482	0,034	0,001	0,001	0,001	74,083	0,004	3,153	0,063	3,859	0,271	0,006	0,008	0,008	592,665	0,028	63,052	1,251	77,173	5,423	0,125	0,167	0,167	11 853,302	0,563
Tractors/Loaders/Backhoes	0,043	0,009	0,586	0,041	0,001	0,001	0,001	75,442	0,024	0,257	0,057	3,513	0,247	0,005	0,008	0,008	452,650	0,146	5,139	1,139	70,262	4,937	0,095	0,152	0,152	9 053,010	2,924
Site Preparation (2 ac)																											
Graders	0,053	0,010	0,372	0,044	0,001	0,001	0,001	80,064	0,026	0,422	0,081	2,975	0,352	0,007	0,011	0,011	640,508	0,207	1,266	0,243	8,925	1,055	0,020	0,032	0,032	1 921,524	0,621
Tractors/Loaders/Backhoes	0,021	0,005	0,293	0,021	0,000	0,001	0,001	37,721	0,012	0,171	0,038	2,342	0,165	0,003	0,005	0,005	301,767	0,097	0,514	0,114	7,026	0,494	0,009	0,015	0,015	905,301	0,292
Rubber Tired Dozers	0,103	0,013	0,479	0,057	0,001	0,002	0,002	103,373	0,033	0,724	0,091	3,354	0,396	0,008	0,012	0,012	723,609	0,233	2,171	0,274	10,063	1,189	0,023	0,037	0,037	2 170,827	0,700
Scrapers																											
Grading (2 ac)																											
Rubber Tired Dozers	0,103	0,013	0,479	0,057	0,001	0,002	0,002	103,373	0,033	0,620	0,078	2,875	0,340	0,007	0,010	0,010	620,236	0,200	3,722	0,470	17,251	2,039	0,039	0,063	0,063	3 721,418	1,200
Concrete/Industrial Saws																											
Tractors/Loaders/Backhoes	0,021	0,005	0,293	0,021	0,000	0,001	0,001	37,721	0,012	0,150	0,033	2,049	0,144	0,003	0,004	0,004	264,046	0,085	0,899	0,199	12,296	0,864	0,017	0,027	0,027	1 584,277	0,512
Graders	0,053	0,010	0,372	0,044	0,001	0,001	0,001	80,064	0,026	0,316	0,061	2,231	0,264	0,005	0,008	0,008	480,381	0,155	1,899	0,365	13,387	1,582	0,030	0,049	0,049	2 882,286	0,931
Excavators																											
Scrapers																											
Building Construction (0 ac)																											
Cranes																											
Forklifts																											
Tractors/Loaders/Backhoes																											
Welders																											
Generator Sets																											
Paving - Asphalt (2 ac)																											
Pavers	0,027	0,007	0,265	0,031	0,001	0,001	0,001	56,895	0,018	0,164	0,043	1,589	0,188	0,004	0,006	0,006	341,372	0,111	1,639	0,433	15,889	1,878	0,036	0,058	0,058	3 413,719	1,105
Cement and Mortar Mixers	0,012	0,001	0,046	0,031	0,000	0,000	0,000	6,315	0,001	0,072	0,008	0,273	0,183	0,001	0,001	0,001	37,887	0,004	0,717	0,080	2,733	1,833	0,005	0,005	0,005	378,873	0,039
Rollers	0,022	0,004	0,248	0,017	0,000	0,001	0,001	31,768	0,010	0,152	0,028	1,736	0,122	0,002	0,004	0,004	222,378	0,072	1,517	0,281	17,358	1,220	0,023	0,038	0,038	2 223,777	0,718
Tractors/Loaders/Backhoes	0,021	0,005	0,293	0,021	0,000	0,001	0,001	37,721	0,012	0,171	0,038	2,342	0,165	0,003	0,005	0,005	301,767	0,097	1,713	0,380	23,421	1,646	0,032	0,051	0,051	3 017,670	0,975
Paving Equipment	0,025	0,006	0,230	0,027	0,001	0,001	0,001	49,308	0,016	0,196	0,050	1,844	0,218	0,004	0,007	0,007	394,466	0,127	1,961	0,503	18,438	2,179	0,042	0,067	0,067	3 944,660	1,274
Paving - Concrete (1 ac)																											
Pavers	0,027	0,007	0,265	0,031	0,001	0,001	0,001	56,895	0,018	0,191	0,051	1,854	0,219	0,004	0,007	0,007	398,267	0,129	1,912	0,506	18,537	2,191	0,042	0,067	0,067	3 982,673	1,289
Cement and Mortar Mixers	0,048	0,005	0,182	0,122	0,000	0,000	0,000	25,258	0,003	0,287	0,032	1,093	0,733	0,002	0,002	0,002	151,549	0,016	2,867	0,320	10,934	7,333	0,021	0,021	0,021	1 515,491	0,157
Rollers	0,022	0,004	0,248	0,017	0,000	0,001	0,001	31,768	0,010	0,152	0,028	1,736	0,122	0,002	0,004	0,004	222,378	0,072	1,517	0,281	17,358	1,220	0,023	0,038	0,038	2 223,777	0,718
Tractors/Loaders/Backhoes	0,021	0,005	0,293	0,021	0,000	0,001	0,001	37,721	0,012	0,150	0,033	2,049	0,144	0,003	0,004	0,004	264,046	0,085	1,499	0,332	20,493	1,440	0,028	0,044	0,044	2 640,461	0,853
Paving Equipment																											
Site Preparation - Pond (0 ac)																											
Graders																											
Tractors/Loaders/Backhoes																											
Rubber Tired Dozers																											
Scrapers																											
Excavation (0 cy)																											
Scrapers																											
Rubber Tired Dozers																											
Off-Highway Trucks																											
Other General Industrial Equipr																											

Total per Phase																											
Demolition	0,540	0,030	1,547	0,132	0,003	0,004	0,004	252,898	0,061	3,513	0,133	7,851	0,575	0,012	0,018	0,018	1 148,688	0,208	70,259	2,652	157,019	11,493	0,242	0,354	0,354	22 973,766	4,154
Site Preparation	0,178	0,028	1,144	0,121	0,002	0,004	0,004	221,157	0,071	1,317	0,211	8,671	0,913	0,018	0,028	0,028	1 665,884	0,538	3,951	0,632	26,014	2,738	0,053	0,084	0,084	4 997,652	1,613
Grading	0,178	0,028	1,144	0,121	0,002	0,004	0,004	221,157	0,071	1,087	0,172	7,156	0,747	0,014	0,023	0,023	1 364,663	0,440	6,521	1,035	42,934	4,485	0,086	0,138	0,138	8 187,981	2,643
Building Construction	0,000	0,000	0,000	0,000	0,000	0,000	0,000	0,000	0,000	0,000	0,000	0,000	0,000	0,000	0,000	0,000	0,000	0,000	0,000	0,000	0,000	0,000	0,000	0,000	0,000	0,000	0,000
Paving - Asphalt	0,107	0,024	1,082	0,127	0,002	0,003	0,003	182,007	0,057	0,755	0,168	7,784	0,876	0,014	0,022	0,022	1 297,870	0,411	7,546	1,677	77,840	8,756	0,138	0,218	0,218	12 978,699	4,111
Paving - Concrete	0,118	0,021	0,988	0,192	0,002	0,002	0,002	151,643	0,043	0,779	0,144	6,732	1,218	0,011	0,017	0,017	1 036,240	0,302	7,795	1,439	67,322	12,184	0,115	0,171	0,171	10 362,401	3,017
Site Preparation - Pond	0,000	0,000	0,000	0,000	0,000	0,000	0,000	0,000	0,000	0,000	0,000	0,000	0,000	0,000	0,000	0,000	0,000	0,000	0,000	0,000	0,000	0,000	0,000	0,000	0,000	0,000	0,000
Excavation	0,000	0,000	0,000	0,000	0,000	0,000	0,000	0,000	0,000	0,000	0,000	0,000	0,000	0,000	0,000	0,000	0,000	0,000	0,000	0,000	0,000	0,000	0,000	0,000	0,000	0,000	0,000
Total																			**96,072**	**7,436**	**371,129**	**39,655**	**0,634**	**0,965**	**0,965**	**59 500**	**15,538**

WPWMA EIR
Construction Emissions - Proposed Project Exhaust Emissions
Plan Concept 2

New SW Ponds

Construction Period:	01.01.2024	to	
Number of workers:		Duration (weeks):	

Off Road Equipment Type	Area Size	Number (ea)	Daily Hours	Annual Days Equipment Used
Demolition				
Scraper - CAT 657				
Water Truck - 4000 gal, 3 axle, 58000 gvw				
Site Preparation (0 ac)	***0 ac***	***0***	***0***	***0***
Graders	0	0	0	0
Tractors/Loaders/Backhoes	0	0	0	0
Rubber Tired Dozers	0	0	0	0
Scrapers	0	0	0	0
Grading (0 ac)	***0 ac***	***0***	***0***	***0***
Rubber Tired Dozers	0	0	0	0
Concrete/Industrial Saws	0	0	0	0
Tractors/Loaders/Backhoes	0	0	0	0
Graders	0	0	0	0
Excavators	0	0	0	0
Scrapers	0	0	0	0
Building Construction (0 ac)	***0 ac***	***0***	***0***	***0***
Cranes	0	0	0	0
Forklifts	0	0	0	0
Tractors/Loaders/Backhoes	0	0	0	0
Welders	0	0	0	0
Generator Sets	0	0	0	0
Paving - Asphalt (0 ac)	***0 ac***	***0***	***0***	***0***
Pavers	0	0	0	0
Cement and Mortar Mixers	0	0	0	0
Rollers	0	0	0	0
Tractors/Loaders/Backhoes	0	0	0	0
Paving Equipment	0	0	0	0
Paving - Concrete (0 ac)	***0 ac***	***0***	***0***	***0***
Pavers	0	0	0	0
Cement and Mortar Mixers	0	0	0	0
Rollers	0	0	0	0
Tractors/Loaders/Backhoes	0	0	0	0
Paving Equipment	0	0	0	0
Site Preparation - Pond (9 ac)	***9 ac***	***7***	***56***	***10***
Graders	9	0	0	0
Tractors/Loaders/Backhoes	9	4	8	10
Rubber Tired Dozers	9	3	8	10
Scrapers	9	0	0	0
Excavation (96342 cy)	***96342 cy***	***4***	***26***	***10***
Scrapers	96342	1	8	10
Rubber Tired Dozers	96342	1	8	10
Off-Highway Trucks	96342	1	8	10
Other General Industrial Equipment	96342	1	2	10

Area Size Reference Table	Size	Unit
Site Preparation	0	ac
Grading	0	ac
Building Construction	0	ac
Paving - Asphalt	0	ac
Paving - Concrete	0	ac
Site Preparation - Pond	9	ac
Excavation	96 342	cy

WPWMA EIR
Construction Emissions - Proposed Project Exhaust Emissions

New SW Ponds

Emission Factors					Emissions Factor (g/bhp-hr)								
Equipment Type	HorsePower	Load Factor	Construction Year	Year+Equipment Type+HorsePower	CO	NOX	PM10	PM2.5	ROG	TOG	SO2	CO2	CH4
Demolition													
Site Preparation (0 ac)													
Graders													
Tractors/Loaders/Backhoes													
Rubber Tired Dozers													
Scrapers													
Grading (0 ac)													
Rubber Tired Dozers													
Concrete/Industrial Saws													
Tractors/Loaders/Backhoes													
Graders													
Excavators													
Scrapers													
Building Construction (0 ac)													
Cranes													
Forklifts													
Tractors/Loaders/Backhoes													
Welders													
Generator Sets													
Paving - Asphalt (0 ac)													
Pavers													
Cement and Mortar Mixers													
Rollers													
Tractors/Loaders/Backhoes													
Paving Equipment													
Paving - Concrete (0 ac)													
Pavers													
Cement and Mortar Mixers													
Rollers													
Tractors/Loaders/Backhoes													
Paving Equipment													
Site Preparation - Pond (9 ac)													
Graders													
Tractors/Loaders/Backhoes	97	0,37	2024	2024Tractors/Loaders/Backhoes120	3,70E+00	2,60E-01	8,00E-03	8,00E-03	6,00E-02	2,71E-01	5,00E-03	4,77E+02	1,54E-01
Rubber Tired Dozers	247	0,4	2024	2024Rubber Tired Dozers250	2,20E+00	2,60E-01	8,00E-03	8,00E-03	6,00E-02	4,75E-01	5,00E-03	4,75E+02	1,53E-01
Scrapers													
Excavation (96342 cy)													
Scrapers	367	0,48	2024	2024Scrapers500	2,20E+00	2,60E-01	8,00E-03	8,00E-03	6,00E-02	2,91E-01	5,00E-03	4,73E+02	1,53E-01
Rubber Tired Dozers	247	0,4	2024	2024Rubber Tired Dozers250	2,20E+00	2,60E-01	8,00E-03	8,00E-03	6,00E-02	4,75E-01	5,00E-03	4,75E+02	1,53E-01
Off-Highway Trucks	402	0,38	2024	2024Off-Highway Trucks500	2,20E+00	2,60E-01	8,00E-03	8,00E-03	6,00E-02	2,20E-01	5,00E-03	4,75E+02	1,54E-01
Other General Industrial Equipn	88	0,34	2024	2024Other General Industrial Equipment1	3,70E+00	2,60E-01	8,00E-03	8,00E-03	6,00E-02	3,42E-01	5,00E-03	4,70E+02	1,52E-01

WPWMA EIR
Construction Emissions - Proposed Project Exhaust Emissions

New SW Ponds

	Hourly Emissions (lb/hr)									Daily Emissions (lb/day)									Annual Emissions (lb/yr)								
Equipment Type	**TOG**	**ROG**	**CO**	**NOX**	**SO2**	**PM10**	**PM2.5**	**CO2**	**CH4**	**TOG**	**ROG**	**CO**	**NOX**	**SO2**	**PM10**	**PM2.5**	**CO2**	**CH4**	**TOG**	**ROG**	**CO**	**NOX**	**SO2**	**PM10**	**PM2.5**	**CO2**	**CH4**
Demolition																											
Site Preparation (0 ac)																											
Graders																											
Tractors/Loaders/Backhoes																											
Rubber Tired Dozers																											
Scrapers																											
Grading (0 ac)																											
Rubber Tired Dozers																											
Concrete/Industrial Saws																											
Tractors/Loaders/Backhoes																											
Graders																											
Excavators																											
Scrapers																											
Building Construction (0 ac)																											
Cranes																											
Forklifts																											
Tractors/Loaders/Backhoes																											
Welders																											
Generator Sets																											
Paving - Asphalt (0 ac)																											
Pavers																											
Cement and Mortar Mixers																											
Rollers																											
Tractors/Loaders/Backhoes																											
Paving Equipment																											
Paving - Concrete (0 ac)																											
Pavers																											
Cement and Mortar Mixers																											
Rollers																											
Tractors/Loaders/Backhoes																											
Paving Equipment																											
Site Preparation - Pond (9 ac)																											
Graders																											
Tractors/Loaders/Backhoes	0,086	0,019	1,171	0,082	0,002	0,003	0,003	150,883	0,049	0,685	0,152	9,368	0,658	0,013	0,020	0,020	1 207,068	0,390	6,851	1,519	93,683	6,583	0,127	0,203	0,203	12 070,679	3,899
Rubber Tired Dozers	0,310	0,039	1,438	0,170	0,003	0,005	0,005	310,118	0,100	2,482	0,314	11,501	1,359	0,026	0,042	0,042	2 480,945	0,800	24,816	3,137	115,007	13,592	0,261	0,418	0,418	24 809,452	7,998
Scrapers																											
Excavation (96342 cy)																											
Scrapers	0,113	0,023	0,854	0,101	0,002	0,003	0,003	183,637	0,059	0,905	0,186	6,835	0,808	0,016	0,025	0,025	1 469,099	0,475	9,045	1,864	68,353	8,078	0,155	0,249	0,249	14 690,993	4,754
Rubber Tired Dozers	0,103	0,013	0,479	0,057	0,001	0,002	0,002	103,373	0,033	0,827	0,105	3,834	0,453	0,009	0,014	0,014	826,982	0,267	8,272	1,046	38,336	4,531	0,087	0,139	0,139	8 269,817	2,666
Off-Highway Trucks	0,074	0,020	0,741	0,088	0,002	0,003	0,003	160,044	0,052	0,591	0,162	5,927	0,700	0,013	0,022	0,022	1 280,352	0,415	5,915	1,617	59,273	7,005	0,135	0,216	0,216	12 803,516	4,149
Other General Industrial Equipr	0,023	0,004	0,244	0,017	0,000	0,001	0,001	31,002	0,010	0,045	0,008	0,488	0,034	0,001	0,001	0,001	62,005	0,020	0,451	0,079	4,881	0,343	0,007	0,011	0,011	620,046	0,201

Total per Phase																											
Site Preparation	0,000	0,000	0,000	0,000	0,000	0,000	0,000	0,000	0,000	0,000	0,000	0,000	0,000	0,000	0,000	0,000	0,000	0,000	0,000	0,000	0,000	0,000	0,000	0,000	0,000	0,000	0,000
Grading	0,000	0,000	0,000	0,000	0,000	0,000	0,000	0,000	0,000	0,000	0,000	0,000	0,000	0,000	0,000	0,000	0,000	0,000	0,000	0,000	0,000	0,000	0,000	0,000	0,000	0,000	0,000
Building Construction	0,000	0,000	0,000	0,000	0,000	0,000	0,000	0,000	0,000	0,000	0,000	0,000	0,000	0,000	0,000	0,000	0,000	0,000	0,000	0,000	0,000	0,000	0,000	0,000	0,000	0,000	0,000
Paving - Asphalt	0,000	0,000	0,000	0,000	0,000	0,000	0,000	0,000	0,000	0,000	0,000	0,000	0,000	0,000	0,000	0,000	0,000	0,000	0,000	0,000	0,000	0,000	0,000	0,000	0,000	0,000	0,000
Paving - Concrete	0,000	0,000	0,000	0,000	0,000	0,000	0,000	0,000	0,000	0,000	0,000	0,000	0,000	0,000	0,000	0,000	0,000	0,000	0,000	0,000	0,000	0,000	0,000	0,000	0,000	0,000	0,000
Site Preparation - Pond	0,396	0,058	2,609	0,252	0,005	0,008	0,008	461,002	0,149	3,167	0,466	20,869	2,017	0,039	0,062	0,062	3 688,013	1,190	31,667	4,656	208,690	20,175	0,388	0,621	0,621	36 880,132	11,897
Excavation	0,313	0,061	2,319	0,262	0,005	0,008	0,008	478,056	0,155	2,368	0,461	17,084	1,996	0,038	0,061	0,061	3 638,437	1,177	23,683	4,605	170,843	19,957	0,384	0,614	0,614	36 384,372	11,769
Total																			**55,350**	**9,261**	**379,533**	**40,132**	**0,772**	**1,235**	**1,235**	**73 264,504**	**23,667**

WPWMA EIR
Construction Emissions - Proposed Project Exhaust Emissions
Plan Concept 2

Unlined Area Excavation (1 of 3)

Construction Period:	01.01.2024	to	
Number of workers:		Duration (weeks):	

Off Road Equipment Type	Area Size	Number (ea)	Daily Hours	Annual Days Equipment Used
Demolition				
Scraper - CAT 657				
Water Truck - 4000 gal, 3 axle, 58000 gvw				
Site Preparation (21 ac)	***21 ac***	***7***	***56***	***10***
Graders	21	0	0	0
Tractors/Loaders/Backhoes	21	4	8	10
Rubber Tired Dozers	21	3	8	10
Scrapers	21	0	0	0
Grading (0 ac)	***0 ac***	***0***	***0***	***0***
Rubber Tired Dozers	0	0	0	0
Concrete/Industrial Saws	0	0	0	0
Tractors/Loaders/Backhoes	0	0	0	0
Graders	0	0	0	0
Excavators	0	0	0	0
Scrapers	0	0	0	0
Building Construction (0 ac)	***0 ac***	***0***	***0***	***0***
Cranes	0	0	0	0
Forklifts	0	0	0	0
Tractors/Loaders/Backhoes	0	0	0	0
Welders	0	0	0	0
Generator Sets	0	0	0	0
Paving - Asphalt (0 ac)	***0 ac***	***0***	***0***	***0***
Pavers	0	0	0	0
Cement and Mortar Mixers	0	0	0	0
Rollers	0	0	0	0
Tractors/Loaders/Backhoes	0	0	0	0
Paving Equipment	0	0	0	0
Paving - Concrete (0 ac)	***0 ac***	***0***	***0***	***0***
Pavers	0	0	0	0
Cement and Mortar Mixers	0	0	0	0
Rollers	0	0	0	0
Tractors/Loaders/Backhoes	0	0	0	0
Paving Equipment	0	0	0	0
Site Preparation - Pond (0 ac)	***0 ac***	***0***	***0***	***0***
Graders	0	0	0	0
Tractors/Loaders/Backhoes	0	0	0	0
Rubber Tired Dozers	0	0	0	0
Scrapers	0	0	0	0
Excavation (1215334 cy)	***1215334 cy***	***16***	***80***	***116***
Scrapers	1215334	4	8	116
Rubber Tired Dozers	1215334	2	8	116
Off-Highway Trucks	1215334	2	8	116
Other General Industrial Equipment	1215334	8	2	116

Area Size Reference Table	Size	Unit
Site Preparation	21	ac
Grading	0	ac
Building Construction	0	ac
Paving - Asphalt	0	ac
Paving - Concrete	0	ac
Site Preparation - Pond	0	ac
Excavation	1 215 334	cy

WPWMA EIR
Construction Emissions - Proposed Project Exhaust Emissions

Unlined Area Excavation (1 of 3)

Emission Factors					Emissions Factor (g/bhp-hr)								
Equipment Type	HorsePower	Load Factor	Construction Year	Year+Equipment Type+HorsePower	CO	NOX	PM10	PM2.5	ROG	TOG	SO2	CO2	CH4
Demolition													
Site Preparation (21 ac)													
Graders													
Tractors/Loaders/Backhoes	97	0,37	2024	2024Tractors/Loaders/Backhoes120	3,70E+00	2,60E-01	8,00E-03	8,00E-03	6,00E-02	2,71E-01	5,00E-03	4,77E+02	1,54E-01
Rubber Tired Dozers	247	0,4	2024	2024Rubber Tired Dozers250	2,20E+00	2,60E-01	8,00E-03	8,00E-03	6,00E-02	4,75E-01	5,00E-03	4,75E+02	1,53E-01
Scrapers													
Grading (0 ac)													
Rubber Tired Dozers													
Concrete/Industrial Saws													
Tractors/Loaders/Backhoes													
Graders													
Excavators													
Scrapers													
Building Construction (0 ac)													
Cranes													
Forklifts													
Tractors/Loaders/Backhoes													
Welders													
Generator Sets													
Paving - Asphalt (0 ac)													
Pavers													
Cement and Mortar Mixers													
Rollers													
Tractors/Loaders/Backhoes													
Paving Equipment													
Paving - Concrete (0 ac)													
Pavers													
Cement and Mortar Mixers													
Rollers													
Tractors/Loaders/Backhoes													
Paving Equipment													
Site Preparation - Pond (0 ac)													
Graders													
Tractors/Loaders/Backhoes													
Rubber Tired Dozers													
Scrapers													
Excavation (1215334 cy)													
Scrapers	367	0,48	2024	2024Scrapers500	2,20E+00	2,60E-01	8,00E-03	8,00E-03	6,00E-02	2,91E-01	5,00E-03	4,73E+02	1,53E-01
Rubber Tired Dozers	247	0,4	2024	2024Rubber Tired Dozers250	2,20E+00	2,60E-01	8,00E-03	8,00E-03	6,00E-02	4,75E-01	5,00E-03	4,75E+02	1,53E-01
Off-Highway Trucks	402	0,38	2024	2024Off-Highway Trucks500	2,20E+00	2,60E-01	8,00E-03	8,00E-03	6,00E-02	2,20E-01	5,00E-03	4,75E+02	1,54E-01
Other General Industrial Equipn	88	0,34	2024	2024Other General Industrial Equipment1	3,70E+00	2,60E-01	8,00E-03	8,00E-03	6,00E-02	3,42E-01	5,00E-03	4,70E+02	1,52E-01

WPWMA EIR
Construction Emissions - Proposed Project Exhaust Emissions

Unlined Area Excavation (1 of 3)

	Hourly Emissions (lb/hr)									Daily Emissions (lb/day)									Annual Emissions (lb/yr)								
Equipment Type	**TOG**	**ROG**	**CO**	**NOX**	**SO2**	**PM10**	**PM2.5**	**CO2**	**CH4**	**TOG**	**ROG**	**CO**	**NOX**	**SO2**	**PM10**	**PM2.5**	**CO2**	**CH4**	**TOG**	**ROG**	**CO**	**NOX**	**SO2**	**PM10**	**PM2.5**	**CO2**	**CH4**
Demolition																											
Site Preparation (21 ac)																											
Graders																											
Tractors/Loaders/Backhoes	0,086	0,019	1,171	0,082	0,002	0,003	0,003	150,883	0,049	0,685	0,152	9,368	0,658	0,013	0,020	0,020	1 207,068	0,390	6,851	1,519	93,683	6,583	0,127	0,203	0,203	12 070,679	3,899
Rubber Tired Dozers	0,310	0,039	1,438	0,170	0,003	0,005	0,005	310,118	0,100	2,482	0,314	11,501	1,359	0,026	0,042	0,042	2 480,945	0,800	24,816	3,137	115,007	13,592	0,261	0,418	0,418	24 809,452	7,998
Scrapers																											
Grading (0 ac)																											
Rubber Tired Dozers																											
Concrete/Industrial Saws																											
Tractors/Loaders/Backhoes																											
Graders																											
Excavators																											
Scrapers																											
Building Construction (0 ac)																											
Cranes																											
Forklifts																											
Tractors/Loaders/Backhoes																											
Welders																											
Generator Sets																											
Paving - Asphalt (0 ac)																											
Pavers																											
Cement and Mortar Mixers																											
Rollers																											
Tractors/Loaders/Backhoes																											
Paving Equipment																											
Paving - Concrete (0 ac)																											
Pavers																											
Cement and Mortar Mixers																											
Rollers																											
Tractors/Loaders/Backhoes																											
Paving Equipment																											
Site Preparation - Pond (0 ac)																											
Graders																											
Tractors/Loaders/Backhoes																											
Rubber Tired Dozers																											
Scrapers																											
Excavation (1215334 cy)																											
Scrapers	0,452	0,093	3,418	0,404	0,008	0,012	0,012	734,550	0,238	3,618	0,746	27,341	3,231	0,062	0,099	0,099	5 876,397	1,901	419,708	86,497	3 171,557	374,820	7,208	11,533	11,533	681 662,092	220,567
Rubber Tired Dozers	0,207	0,026	0,958	0,113	0,002	0,003	0,003	206,745	0,067	1,654	0,209	7,667	0,906	0,017	0,028	0,028	1 653,963	0,533	191,907	24,256	889,390	105,110	2,021	3,234	3,234	191 859,763	61,853
Off-Highway Trucks	0,148	0,040	1,482	0,175	0,003	0,005	0,005	320,088	0,104	1,183	0,323	11,855	1,401	0,027	0,043	0,043	2 560,703	0,830	137,228	37,504	1 375,134	162,516	3,125	5,000	5,000	297 041,562	96,259
Other General Industrial Equipr	0,180	0,032	1,952	0,137	0,003	0,004	0,004	248,018	0,080	0,361	0,063	3,905	0,274	0,005	0,008	0,008	496,037	0,160	41,839	7,346	452,977	31,831	0,612	0,979	0,979	57 540,264	18,609

Total per Phase																											
Site Preparation	0,396	0,058	2,609	0,252	0,005	0,008	0,008	461,002	0,149	3,167	0,466	20,869	2,017	0,039	0,062	0,062	3 688,013	1,190	31,667	4,656	208,690	20,175	0,388	0,621	0,621	36 880,132	11,897
Grading	0,000	0,000	0,000	0,000	0,000	0,000	0,000	0,000	0,000	0,000	0,000	0,000	0,000	0,000	0,000	0,000	0,000	0,000	0,000	0,000	0,000	0,000	0,000	0,000	0,000	0,000	0,000
Building Construction	0,000	0,000	0,000	0,000	0,000	0,000	0,000	0,000	0,000	0,000	0,000	0,000	0,000	0,000	0,000	0,000	0,000	0,000	0,000	0,000	0,000	0,000	0,000	0,000	0,000	0,000	0,000
Paving - Asphalt	0,000	0,000	0,000	0,000	0,000	0,000	0,000	0,000	0,000	0,000	0,000	0,000	0,000	0,000	0,000	0,000	0,000	0,000	0,000	0,000	0,000	0,000	0,000	0,000	0,000	0,000	0,000
Paving - Concrete	0,000	0,000	0,000	0,000	0,000	0,000	0,000	0,000	0,000	0,000	0,000	0,000	0,000	0,000	0,000	0,000	0,000	0,000	0,000	0,000	0,000	0,000	0,000	0,000	0,000	0,000	0,000
Site Preparation - Pond	0,000	0,000	0,000	0,000	0,000	0,000	0,000	0,000	0,000	0,000	0,000	0,000	0,000	0,000	0,000	0,000	0,000	0,000	0,000	0,000	0,000	0,000	0,000	0,000	0,000	0,000	0,000
Excavation	0,987	0,191	7,810	0,829	0,016	0,026	0,026	1 509,401	0,488	6,816	1,341	50,768	5,813	0,112	0,179	0,179	10 587,101	3,425	790,681	155,602	5 889,058	674,277	12,967	20,747	20,747	1 228 103,681	397,289
Total																			**822,348**	**160,258**	**6 097,748**	**694,452**	**13,355**	**21,368**	**21,368**	**1 264 984**	**409,186**

WPWMA EIR
Construction Emissions - Proposed Project Exhaust Emissions
Plan Concept 2

Stockpile Relocation

Construction Period:	01.01.2024	to	
Number of workers:		Duration (weeks):	

Off Road Equipment Type	Area Size	Number (ea)	Daily Hours	Annual Days Equipment Used
Demolition				
Scraper - CAT 657				
Water Truck - 4000 gal, 3 axle, 58000 gvw				
Site Preparation (0 ac)	***0 ac***	***0***	***0***	***0***
Graders	0	0	0	0
Tractors/Loaders/Backhoes	0	0	0	0
Rubber Tired Dozers	0	0	0	0
Scrapers	0	0	0	0
Grading (0 ac)	***0 ac***	***0***	***0***	***0***
Rubber Tired Dozers	0	0	0	0
Concrete/Industrial Saws	0	0	0	0
Tractors/Loaders/Backhoes	0	0	0	0
Graders	0	0	0	0
Excavators	0	0	0	0
Scrapers	0	0	0	0
Building Construction (0 ac)	***0 ac***	***0***	***0***	***0***
Cranes	0	0	0	0
Forklifts	0	0	0	0
Tractors/Loaders/Backhoes	0	0	0	0
Welders	0	0	0	0
Generator Sets	0	0	0	0
Paving - Asphalt (0 ac)	***0 ac***	***0***	***0***	***0***
Pavers	0	0	0	0
Cement and Mortar Mixers	0	0	0	0
Rollers	0	0	0	0
Tractors/Loaders/Backhoes	0	0	0	0
Paving Equipment	0	0	0	0
Paving - Concrete (0 ac)	***0 ac***	***0***	***0***	***0***
Pavers	0	0	0	0
Cement and Mortar Mixers	0	0	0	0
Rollers	0	0	0	0
Tractors/Loaders/Backhoes	0	0	0	0
Paving Equipment	0	0	0	0
Site Preparation - Pond (0 ac)	***0 ac***	***0***	***0***	***0***
Graders	0	0	0	0
Tractors/Loaders/Backhoes	0	0	0	0
Rubber Tired Dozers	0	0	0	0
Scrapers	0	0	0	0
Excavation (0 cy)	***0 cy***	***0***	***0***	***0***
Scrapers	0	0	0	0
Rubber Tired Dozers	0	0	0	0
Off-Highway Trucks	0	0	0	0
Other General Industrial Equipment	0	0	0	0
Stockpile Movement (700000 cy)	***700000 cy***	***5***	***40***	***260***
Scrapers	700000	5	8	260

Area Size Reference Table	Size	Unit
Site Preparation	0	ac
Grading	0	ac
Building Construction	0	ac
Paving - Asphalt	0	ac
Paving - Concrete	0	ac
Site Preparation - Pond	0	ac
Excavation	0	cy
Stockpile Movement	700 000	cy

WPWMA EIR
Construction Emissions - Proposed Project Exhaust Emissions

Stockpile Relocation

Emission Factors					Emissions Factor (g/bhp-hr)								
Equipment Type	**HorsePower**	**Load Factor**	**Construction Year**	**Year+Equipment Type+HorsePower**	**CO**	**NOX**	**PM10**	**PM2.5**	**ROG**	**TOG**	**SO2**	**CO2**	**CH4**
Demolition													
Site Preparation (0 ac)													
Graders													
Tractors/Loaders/Backhoes													
Rubber Tired Dozers													
Scrapers													
Grading (0 ac)													
Rubber Tired Dozers													
Concrete/Industrial Saws													
Tractors/Loaders/Backhoes													
Graders													
Excavators													
Scrapers													
Building Construction (0 ac)													
Cranes													
Forklifts													
Tractors/Loaders/Backhoes													
Welders													
Generator Sets													
Paving - Asphalt (0 ac)													
Pavers													
Cement and Mortar Mixers													
Rollers													
Tractors/Loaders/Backhoes													
Paving Equipment													
Paving - Concrete (0 ac)													
Pavers													
Cement and Mortar Mixers													
Rollers													
Tractors/Loaders/Backhoes													
Paving Equipment													
Site Preparation - Pond (0 ac)													
Graders													
Tractors/Loaders/Backhoes													
Rubber Tired Dozers													
Scrapers													
Excavation (0 cy)													
Scrapers													
Rubber Tired Dozers													
Off-Highway Trucks													
Other General Industrial Equipr													
Stockpile Movement (700000 cy)													
Scrapers	367	0,48	2024	2024Scrapers500	2,20E+00	2,60E-01	8,00E-03	8,00E-03	6,00E-02	2,91E-01	5,00E-03	4,73E+02	1,53E-01

WPWMA EIR
Construction Emissions - Proposed Project Exhaust Emissions

Stockpile Relocation

	Hourly Emissions (lb/hr)									Daily Emissions (lb/day)									Annual Emissions (lb/yr)								
Equipment Type	**TOG**	**ROG**	**CO**	**NOX**	**SO2**	**PM10**	**PM2.5**	**CO2**	**CH4**	**TOG**	**ROG**	**CO**	**NOX**	**SO2**	**PM10**	**PM2.5**	**CO2**	**CH4**	**TOG**	**ROG**	**CO**	**NOX**	**SO2**	**PM10**	**PM2.5**	**CO2**	**CH4**
Demolition																											
Site Preparation (0 ac)																											
Graders																											
Tractors/Loaders/Backhoes																											
Rubber Tired Dozers																											
Scrapers																											
Grading (0 ac)																											
Rubber Tired Dozers																											
Concrete/Industrial Saws																											
Tractors/Loaders/Backhoes																											
Graders																											
Excavators																											
Scrapers																											
Building Construction (0 ac)																											
Cranes																											
Forklifts																											
Tractors/Loaders/Backhoes																											
Welders																											
Generator Sets																											
Paving - Asphalt (0 ac)																											
Pavers																											
Cement and Mortar Mixers																											
Rollers																											
Tractors/Loaders/Backhoes																											
Paving Equipment																											
Paving - Concrete (0 ac)																											
Pavers																											
Cement and Mortar Mixers																											
Rollers																											
Tractors/Loaders/Backhoes																											
Paving Equipment																											
Site Preparation - Pond (0 ac)																											
Graders																											
Tractors/Loaders/Backhoes																											
Rubber Tired Dozers																											
Scrapers																											
Excavation (0 cy)																											
Scrapers																											
Rubber Tired Dozers																											
Off-Highway Trucks																											
Other General Industrial Equip																											
Stockpile Movement (700000 cy)																											
Scrapers	0,565	0,117	4,272	0,505	0,010	0,016	0,016	918,187	0,297	4,523	0,932	34,176	4,039	0,078	0,124	0,124	7 345,497	2,377	1 175,906	242,341	8 885,829	1 050,143	20,195	32,312	32,312	1 909 829,137	617,969

Total per Phase																											
Site Preparation	0,000	0,000	0,000	0,000	0,000	0,000	0,000	0,000	0,000	0,000	0,000	0,000	0,000	0,000	0,000	0,000	0,000	0,000	0,000	0,000	0,000	0,000	0,000	0,000	0,000	0,000	0,000
Grading	0,000	0,000	0,000	0,000	0,000	0,000	0,000	0,000	0,000	0,000	0,000	0,000	0,000	0,000	0,000	0,000	0,000	0,000	0,000	0,000	0,000	0,000	0,000	0,000	0,000	0,000	0,000
Building Construction	0,000	0,000	0,000	0,000	0,000	0,000	0,000	0,000	0,000	0,000	0,000	0,000	0,000	0,000	0,000	0,000	0,000	0,000	0,000	0,000	0,000	0,000	0,000	0,000	0,000	0,000	0,000
Paving - Asphalt	0,000	0,000	0,000	0,000	0,000	0,000	0,000	0,000	0,000	0,000	0,000	0,000	0,000	0,000	0,000	0,000	0,000	0,000	0,000	0,000	0,000	0,000	0,000	0,000	0,000	0,000	0,000
Paving - Concrete	0,000	0,000	0,000	0,000	0,000	0,000	0,000	0,000	0,000	0,000	0,000	0,000	0,000	0,000	0,000	0,000	0,000	0,000	0,000	0,000	0,000	0,000	0,000	0,000	0,000	0,000	0,000
Site Preparation - Pond	0,000	0,000	0,000	0,000	0,000	0,000	0,000	0,000	0,000	0,000	0,000	0,000	0,000	0,000	0,000	0,000	0,000	0,000	0,000	0,000	0,000	0,000	0,000	0,000	0,000	0,000	0,000
Excavation	0,000	0,000	0,000	0,000	0,000	0,000	0,000	0,000	0,000	0,000	0,000	0,000	0,000	0,000	0,000	0,000	0,000	0,000	0,000	0,000	0,000	0,000	0,000	0,000	0,000	0,000	0,000
Stockpile Movement	0,565	0,117	4,272	0,505	0,010	0,016	0,016	918,187	0,297	4,523	0,932	34,176	4,039	0,078	0,124	0,124	7 345,497	2,377	1 175,906	242,341	8 885,829	1 050,143	20,195	32,312	32,312	1 909 829,137	617,969
Total																			**1 175,906**	**242,341**	**8 885,829**	**1 050,143**	**20,195**	**32,312**	**32,312**	**1 909 829**	**617,969**

WPWMA EIR
Construction Emissions - Proposed Project Exhaust Emissions
Plan Concept 2

Public Area

Construction Period:	01.01.2026	to	
Number of workers:		Duration (weeks):	

Off Road Equipment Type	Area Size	Number (ea)	Daily Hours	Annual Days Equipment Used
Demolition	***8 ac***	***6***	***48***	***20***
Excavators	8	3	8	20
Rubber Tired Dozers	8	2	8	20
Concrete/Industrial Saws	8	1	8	20
Tractors/Loaders/Backhoes	8	0	0	0
Site Preparation (15 ac)	***15 ac***	***7***	***56***	***10***
Graders	15	0	0	0
Tractors/Loaders/Backhoes	15	4	8	10
Rubber Tired Dozers	15	3	8	10
Scrapers	15	0	0	0
Grading (15 ac)	***15 ac***	***8***	***64***	***30***
Rubber Tired Dozers	15	1	8	30
Concrete/Industrial Saws	15	0	0	0
Tractors/Loaders/Backhoes	15	2	8	30
Graders	15	1	8	30
Excavators	15	2	8	30
Scrapers	15	2	8	30
Building Construction (2 ac)	***2 ac***	***7***	***50***	***220***
Cranes	2	1	6	220
Forklifts	2	1	6	220
Tractors/Loaders/Backhoes	2	1	6	220
Welders	2	3	8	220
Generator Sets	2	1	8	220
Paving - Asphalt (9 ac)	***9 ac***	***8***	***52***	***20***
Pavers	9	1	8	20
Cement and Mortar Mixers	9	2	6	20
Rollers	9	2	6	20
Tractors/Loaders/Backhoes	9	1	8	20
Paving Equipment	9	2	6	20
Paving - Concrete (2 ac)	***2 ac***	***5***	***35***	***10***
Pavers	2	1	6	10
Cement and Mortar Mixers	2	1	6	10
Rollers	2	1	7	10
Tractors/Loaders/Backhoes	2	1	8	10
Paving Equipment	2	1	8	10
Site Preparation - Pond (2 ac)	***2 ac***	***3***	***23***	***3***
Graders	2	1	8	3
Tractors/Loaders/Backhoes	2	1	8	3
Rubber Tired Dozers	2	1	7	3
Scrapers	2	0	0	0
Excavation (10162 cy)	***10162 cy***	***4***	***26***	***1***
Scrapers	10162	1	8	1
Rubber Tired Dozers	10162	1	8	1
Off-Highway Trucks	10162	1	8	1
Other General Industrial Equipment	10162	1	2	1

Area Size Reference Table	Size	Unit
Demolition	8	ac
Site Preparation	15	ac
Grading	15	ac
Building Construction	2	ac
Paving - Asphalt	9	ac
Paving - Concrete	2	ac
Site Preparation - Pond	2	ac
Excavation	10 162	cy

WPWMA EIR
Construction Emissions - Proposed Project Exhaust Emissions

Public Area

Emission Factors					Emissions Factor (g/bhp-hr)								
Equipment Type	**HorsePower**	**Load Factor**	**Construction Year**	**Year+Equipment Type+HorsePower**	**CO**	**NOX**	**PM10**	**PM2.5**	**ROG**	**TOG**	**SO2**	**CO2**	**CH4**
Demolition													
Excavators	158	0,38	2026	2025Excavators175	2,20E+00	2,60E-01	8,00E-03	8,00E-03	6,00E-02	1,88E-01	5,00E-03	4,72E+02	1,53E-01
Rubber Tired Dozers	247	0,4	2026	2025Rubber Tired Dozers250	2,20E+00	2,60E-01	8,00E-03	8,00E-03	6,00E-02	4,43E-01	5,00E-03	4,75E+02	1,53E-01
Concrete/Industrial Saws	81	0,73	2026	2025Concrete/Industrial Saws120	3,70E+00	2,60E-01	8,00E-03	8,00E-03	6,00E-02	2,85E+00	6,00E-03	5,68E+02	2,50E-02
Tractors/Loaders/Backhoes													
Site Preparation (15 ac)													
Graders													
Tractors/Loaders/Backhoes	97	0,37	2026	2025Tractors/Loaders/Backhoes120	3,70E+00	2,60E-01	8,00E-03	8,00E-03	6,00E-02	2,48E-01	5,00E-03	4,77E+02	1,54E-01
Rubber Tired Dozers	247	0,4	2026	2025Rubber Tired Dozers250	2,20E+00	2,60E-01	8,00E-03	8,00E-03	6,00E-02	4,43E-01	5,00E-03	4,75E+02	1,53E-01
Scrapers													
Grading (15 ac)													
Rubber Tired Dozers	247	0,4	2026	2025Rubber Tired Dozers250	2,20E+00	2,60E-01	8,00E-03	8,00E-03	6,00E-02	4,43E-01	5,00E-03	4,75E+02	1,53E-01
Concrete/Industrial Saws													
Tractors/Loaders/Backhoes	97	0,37	2026	2025Tractors/Loaders/Backhoes120	3,70E+00	2,60E-01	8,00E-03	8,00E-03	6,00E-02	2,48E-01	5,00E-03	4,77E+02	1,54E-01
Graders	187	0,41	2026	2025Graders250	2,20E+00	2,60E-01	8,00E-03	8,00E-03	6,00E-02	2,74E-01	5,00E-03	4,73E+02	1,53E-01
Excavators	158	0,38	2026	2025Excavators175	2,20E+00	2,60E-01	8,00E-03	8,00E-03	6,00E-02	1,88E-01	5,00E-03	4,72E+02	1,53E-01
Scrapers	367	0,48	2026	2025Scrapers500	2,20E+00	2,60E-01	8,00E-03	8,00E-03	6,00E-02	2,57E-01	5,00E-03	4,73E+02	1,53E-01
Building Construction (2 ac)													
Cranes	231	0,29	2026	2025Cranes250	2,20E+00	2,60E-01	8,00E-03	8,00E-03	6,00E-02	3,15E-01	5,00E-03	4,73E+02	1,53E-01
Forklifts	89	0,2	2026	2025Forklifts120	3,70E+00	2,60E-01	8,00E-03	8,00E-03	6,00E-02	3,29E-01	5,00E-03	4,72E+02	1,53E-01
Tractors/Loaders/Backhoes	97	0,37	2026	2025Tractors/Loaders/Backhoes120	3,70E+00	2,60E-01	8,00E-03	8,00E-03	6,00E-02	2,48E-01	5,00E-03	4,77E+02	1,54E-01
Welders	46	0,45	2026	2025Welders50	4,10E+00	2,75E+00	8,00E-03	8,00E-03	1,20E-01	6,32E+00	7,00E-03	5,68E+02	5,40E-02
Generator Sets	84	0,74	2026	2025Generator Sets120	3,70E+00	2,60E-01	8,00E-03	8,00E-03	6,00E-02	4,94E+00	6,00E-03	5,68E+02	2,10E-02
Paving - Asphalt (9 ac)													
Pavers	130	0,42	2026	2025Pavers175	2,20E+00	2,60E-01	8,00E-03	8,00E-03	6,00E-02	2,15E-01	5,00E-03	4,72E+02	1,53E-01
Cement and Mortar Mixers	9	0,56	2026	2025Cement and Mortar Mixers15	4,10E+00	2,75E+00	8,00E-03	8,00E-03	1,20E-01	1,08E+00	8,00E-03	5,68E+02	5,90E-02
Rollers	80	0,38	2026	2025Rollers120	3,70E+00	2,60E-01	8,00E-03	8,00E-03	6,00E-02	3,04E-01	5,00E-03	4,74E+02	1,53E-01
Tractors/Loaders/Backhoes	97	0,37	2026	2025Tractors/Loaders/Backhoes120	3,70E+00	2,60E-01	8,00E-03	8,00E-03	6,00E-02	2,48E-01	5,00E-03	4,77E+02	1,54E-01
Paving Equipment	132	0,36	2026	2025Paving Equipment175	2,20E+00	2,60E-01	8,00E-03	8,00E-03	6,00E-02	2,08E-01	5,00E-03	4,70E+02	1,52E-01
Paving - Concrete (2 ac)													
Pavers	130	0,42	2026	2025Pavers175	2,20E+00	2,60E-01	8,00E-03	8,00E-03	6,00E-02	2,15E-01	5,00E-03	4,72E+02	1,53E-01
Cement and Mortar Mixers	9	0,56	2026	2025Cement and Mortar Mixers15	4,10E+00	2,75E+00	8,00E-03	8,00E-03	1,20E-01	1,08E+00	8,00E-03	5,68E+02	5,90E-02
Rollers	80	0,38	2026	2025Rollers120	3,70E+00	2,60E-01	8,00E-03	8,00E-03	6,00E-02	3,04E-01	5,00E-03	4,74E+02	1,53E-01
Tractors/Loaders/Backhoes	97	0,37	2026	2025Tractors/Loaders/Backhoes120	3,70E+00	2,60E-01	8,00E-03	8,00E-03	6,00E-02	2,48E-01	5,00E-03	4,77E+02	1,54E-01
Paving Equipment	132	0,36	2026	2025Paving Equipment175	2,20E+00	2,60E-01	8,00E-03	8,00E-03	6,00E-02	2,08E-01	5,00E-03	4,70E+02	1,52E-01
Site Preparation - Pond (2 ac)													
Graders	187	0,41	2026	2025Graders250	2,20E+00	2,60E-01	8,00E-03	8,00E-03	6,00E-02	2,74E-01	5,00E-03	4,73E+02	1,53E-01
Tractors/Loaders/Backhoes	97	0,37	2026	2025Tractors/Loaders/Backhoes120	3,70E+00	2,60E-01	8,00E-03	8,00E-03	6,00E-02	2,48E-01	5,00E-03	4,77E+02	1,54E-01
Rubber Tired Dozers	247	0,4	2026	2025Rubber Tired Dozers250	2,20E+00	2,60E-01	8,00E-03	8,00E-03	6,00E-02	4,43E-01	5,00E-03	4,75E+02	1,53E-01
Scrapers													
Excavation (10162 cy)													
Scrapers	367	0,48	2026	2025Scrapers500	2,20E+00	2,60E-01	8,00E-03	8,00E-03	6,00E-02	2,57E-01	5,00E-03	4,73E+02	1,53E-01
Rubber Tired Dozers	247	0,4	2026	2025Rubber Tired Dozers250	2,20E+00	2,60E-01	8,00E-03	8,00E-03	6,00E-02	4,43E-01	5,00E-03	4,75E+02	1,53E-01
Off-Highway Trucks	402	0,38	2026	2025Off-Highway Trucks500	2,20E+00	2,60E-01	8,00E-03	8,00E-03	6,00E-02	2,11E-01	5,00E-03	4,75E+02	1,54E-01
Other General Industrial Equipn	88	0,34	2026	2025Other General Industrial Equipment1	3,70E+00	2,60E-01	8,00E-03	8,00E-03	6,00E-02	3,06E-01	5,00E-03	4,70E+02	1,52E-01

WPWMA EIR
Construction Emissions - Proposed Project Exhaust Emissions

Public Area

	Hourly Emissions (lb/hr)									Daily Emissions (lb/day)									Annual Emissions (lb/yr)								
Equipment Type	**TOG**	**ROG**	**CO**	**NOX**	**SO2**	**PM10**	**PM2.5**	**CO2**	**CH4**	**TOG**	**ROG**	**CO**	**NOX**	**SO2**	**PM10**	**PM2.5**	**CO2**	**CH4**	**TOG**	**ROG**	**CO**	**NOX**	**SO2**	**PM10**	**PM2.5**	**CO2**	**CH4**
Demolition																											
Excavators	0,075	0,024	0,874	0,103	0,002	0,003	0,003	187,627	0,061	0,597	0,191	6,989	0,826	0,016	0,025	0,025	1 501,015	0,486	11,933	3,812	139,778	16,519	0,318	0,508	0,508	30 020,301	9,721
Rubber Tired Dozers	0,193	0,026	0,958	0,113	0,002	0,003	0,003	206,740	0,067	1,543	0,209	7,667	0,906	0,017	0,028	0,028	1 653,922	0,533	30,850	4,182	153,343	18,122	0,349	0,558	0,558	33 078,433	10,664
Concrete/Industrial Saws	0,371	0,008	0,482	0,034	0,001	0,001	0,001	74,083	0,003	2,971	0,063	3,859	0,271	0,006	0,008	0,008	592,666	0,026	59,423	1,251	77,173	5,423	0,125	0,167	0,167	11 853,323	0,521
Tractors/Loaders/Backhoes																											
Site Preparation (15 ac)																											
Graders																											
Tractors/Loaders/Backhoes	0,079	0,019	1,171	0,082	0,002	0,003	0,003	151,028	0,049	0,629	0,152	9,368	0,658	0,013	0,020	0,020	1 208,224	0,390	6,290	1,519	93,683	6,583	0,127	0,203	0,203	12 082,243	3,899
Rubber Tired Dozers	0,289	0,039	1,438	0,170	0,003	0,005	0,005	310,110	0,100	2,314	0,314	11,501	1,359	0,026	0,042	0,042	2 480,882	0,800	23,138	3,137	115,007	13,592	0,261	0,418	0,418	24 808,825	7,998
Scrapers																											
Grading (15 ac)																											
Rubber Tired Dozers	0,096	0,013	0,479	0,057	0,001	0,002	0,002	103,370	0,033	0,771	0,105	3,834	0,453	0,009	0,014	0,014	826,961	0,267	23,138	3,137	115,007	13,592	0,261	0,418	0,418	24 808,825	7,998
Concrete/Industrial Saws																											
Tractors/Loaders/Backhoes	0,039	0,009	0,586	0,041	0,001	0,001	0,001	75,514	0,024	0,314	0,076	4,684	0,329	0,006	0,010	0,010	604,112	0,195	9,435	2,279	140,524	9,875	0,190	0,304	0,304	18 123,364	5,849
Graders	0,046	0,010	0,372	0,044	0,001	0,001	0,001	80,030	0,026	0,370	0,081	2,975	0,352	0,007	0,011	0,011	640,240	0,207	11,107	2,434	89,247	10,547	0,203	0,325	0,325	19 207,204	6,207
Excavators	0,050	0,016	0,582	0,069	0,001	0,002	0,002	125,085	0,041	0,398	0,127	4,659	0,551	0,011	0,017	0,017	1 000,677	0,324	11,933	3,812	139,778	16,519	0,318	0,508	0,508	30 020,301	9,721
Scrapers	0,200	0,047	1,709	0,202	0,004	0,006	0,006	367,037	0,119	1,599	0,373	13,671	1,616	0,031	0,050	0,050	2 936,297	0,951	47,970	11,185	410,115	48,468	0,932	1,491	1,491	88 088,898	28,522
Building Construction (2 ac)																											
Cranes	0,047	0,009	0,325	0,038	0,001	0,001	0,001	69,853	0,023	0,279	0,053	1,949	0,230	0,004	0,007	0,007	419,120	0,136	61,424	11,697	428,885	50,686	0,975	1,560	1,560	92 206,411	29,827
Forklifts	0,013	0,002	0,145	0,010	0,000	0,000	0,000	18,504	0,006	0,078	0,014	0,871	0,061	0,001	0,002	0,002	111,023	0,036	17,062	3,108	191,659	13,468	0,259	0,414	0,414	24 425,108	7,925
Tractors/Loaders/Backhoes	0,020	0,005	0,293	0,021	0,000	0,001	0,001	37,757	0,012	0,118	0,028	1,757	0,123	0,002	0,004	0,004	226,542	0,073	25,945	6,267	386,441	27,155	0,522	0,836	0,836	49 839,252	16,084
Welders	0,865	0,016	0,561	0,376	0,001	0,001	0,001	77,804	0,007	6,917	0,131	4,491	3,012	0,008	0,009	0,009	622,434	0,059	1 521,641	28,915	987,922	662,631	1,687	1,928	1,928	136 935,412	13,012
Generator Sets	0,677	0,008	0,507	0,036	0,001	0,001	0,001	77,879	0,003	5,418	0,066	4,056	0,285	0,007	0,009	0,009	623,035	0,023	1 191,958	14,471	892,401	62,709	1,447	1,930	1,930	137 067,717	5,065
Paving - Asphalt (9 ac)																											
Pavers	0,026	0,007	0,265	0,031	0,001	0,001	0,001	56,874	0,018	0,207	0,058	2,119	0,250	0,005	0,008	0,008	454,994	0,147	4,137	1,156	42,371	5,007	0,096	0,154	0,154	9 099,872	2,947
Cement and Mortar Mixers	0,024	0,003	0,091	0,061	0,000	0,000	0,000	12,629	0,001	0,143	0,016	0,547	0,367	0,001	0,001	0,001	75,775	0,008	2,867	0,320	10,934	7,333	0,021	0,021	0,021	1 515,491	0,157
Rollers	0,041	0,008	0,496	0,035	0,001	0,001	0,001	63,516	0,021	0,244	0,048	2,976	0,209	0,004	0,006	0,006	381,093	0,123	4,890	0,965	59,514	4,182	0,080	0,129	0,129	7 621,865	2,461
Tractors/Loaders/Backhoes	0,020	0,005	0,293	0,021	0,000	0,001	0,001	37,757	0,012	0,157	0,038	2,342	0,165	0,003	0,005	0,005	302,056	0,097	3,145	0,760	46,841	3,292	0,063	0,101	0,101	6 041,121	1,950
Paving Equipment	0,044	0,013	0,461	0,054	0,001	0,002	0,002	98,579	0,032	0,262	0,075	2,766	0,327	0,006	0,010	0,010	591,477	0,191	5,241	1,509	55,315	6,537	0,126	0,201	0,201	11 829,531	3,822
Paving - Concrete (2 ac)																											
Pavers	0,026	0,007	0,265	0,031	0,001	0,001	0,001	56,874	0,018	0,155	0,043	1,589	0,188	0,004	0,006	0,006	341,245	0,111	1,551	0,433	15,889	1,878	0,036	0,058	0,058	3 412,452	1,105
Cement and Mortar Mixers	0,012	0,001	0,046	0,031	0,000	0,000	0,000	6,315	0,001	0,072	0,008	0,273	0,183	0,001	0,001	0,001	37,887	0,004	0,717	0,080	2,733	1,833	0,005	0,005	0,005	378,873	0,039
Rollers	0,020	0,004	0,248	0,017	0,000	0,001	0,001	31,758	0,010	0,143	0,028	1,736	0,122	0,002	0,004	0,004	222,304	0,072	1,426	0,281	17,358	1,220	0,023	0,038	0,038	2 223,044	0,718
Tractors/Loaders/Backhoes	0,020	0,005	0,293	0,021	0,000	0,001	0,001	37,757	0,012	0,157	0,038	2,342	0,165	0,003	0,005	0,005	302,056	0,097	1,572	0,380	23,421	1,646	0,032	0,051	0,051	3 020,561	0,975
Paving Equipment	0,022	0,006	0,230	0,027	0,001	0,001	0,001	49,290	0,016	0,175	0,050	1,844	0,218	0,004	0,007	0,007	394,318	0,127	1,747	0,503	18,438	2,179	0,042	0,067	0,067	3 943,177	1,274
Site Preparation - Pond (2 ac)																											
Graders	0,046	0,010	0,372	0,044	0,001	0,001	0,001	80,030	0,026	0,370	0,081	2,975	0,352	0,007	0,011	0,011	640,240	0,207	1,111	0,243	8,925	1,055	0,020	0,032	0,032	1 920,720	0,621
Tractors/Loaders/Backhoes	0,020	0,005	0,293	0,021	0,000	0,001	0,001	37,757	0,012	0,157	0,038	2,342	0,165	0,003	0,005	0,005	302,056	0,097	0,472	0,114	7,026	0,494	0,009	0,015	0,015	906,168	0,292
Rubber Tired Dozers	0,096	0,013	0,479	0,057	0,001	0,002	0,002	103,370	0,033	0,675	0,091	3,354	0,396	0,008	0,012	0,012	723,591	0,233	2,025	0,274	10,063	1,189	0,023	0,037	0,037	2 170,772	0,700
Scrapers																											
Excavation (10162 cy)																											
Scrapers	0,100	0,023	0,854	0,101	0,002	0,003	0,003	183,519	0,059	0,800	0,186	6,835	0,808	0,016	0,025	0,025	1 468,148	0,475	0,800	0,186	6,835	0,808	0,016	0,025	0,025	1 468,148	0,475
Rubber Tired Dozers	0,096	0,013	0,479	0,057	0,001	0,002	0,002	103,370	0,033	0,771	0,105	3,834	0,453	0,009	0,014	0,014	826,961	0,267	0,771	0,105	3,834	0,453	0,009	0,014	0,014	826,961	0,267
Off-Highway Trucks	0,071	0,020	0,741	0,088	0,002	0,003	0,003	159,960	0,052	0,568	0,162	5,927	0,700	0,013	0,022	0,022	1 279,676	0,415	0,568	0,162	5,927	0,700	0,013	0,022	0,022	1 279,676	0,415
Other General Industrial Equipr	0,020	0,004	0,244	0,017	0,000	0,001	0,001	31,002	0,010	0,040	0,008	0,488	0,034	0,001	0,001	0,001	62,005	0,020	0,040	0,008	0,488	0,034	0,001	0,001	0,001	62,005	0,020

Total per Phase																											
Demolition	0,639	0,058	2,314	0,250	0,005	0,008	0,008	468,450	0,131	5,110	0,462	18,515	2,003	0,040	0,062	0,062	3 747,603	1,045	102,206	9,246	370,294	40,065	0,791	1,233	1,233	74 952,057	20,907
Site Preparation	0,368	0,058	2,609	0,252	0,005	0,008	0,008	461,138	0,149	2,943	0,466	20,869	2,017	0,039	0,062	0,062	3 689,107	1,190	29,427	4,656	208,690	20,175	0,388	0,621	0,621	36 891,068	11,897
Grading	0,432	0,095	3,728	0,413	0,008	0,013	0,013	751,036	0,243	3,453	0,762	29,822	3,300	0,063	0,102	0,102	6 008,286	1,943	103,582	22,846	894,672	99,001	1,904	3,046	3,046	180 248,592	58,296
Building Construction	1,621	0,041	1,831	0,481	0,003	0,004	0,004	281,798	0,051	12,809	0,293	13,124	3,712	0,022	0,030	0,030	2 002,154	0,327	2 818,031	64,458	2 887,309	816,650	4,890	6,667	6,667	440 473,900	71,913
Paving - Asphalt	0,154	0,035	1,606	0,202	0,003	0,005	0,005	269,355	0,084	1,014	0,235	10,749	1,318	0,019	0,030	0,030	1 805,394	0,567	20,280	4,709	214,976	26,352	0,387	0,607	0,607	36 107,879	11,336
Paving - Concrete	0,100	0,024	1,082	0,127	0,002	0,003	0,003	181,993	0,057	0,701	0,168	7,784	0,876	0,014	0,022	0,022	1 297,811	0,411	7,014	1,677	77,840	8,756	0,138	0,218	0,218	12 978,106	4,111
Site Preparation - Pond	0,162	0,028	1,144	0,121	0,002	0,004	0,004	221,157	0,071	1,202	0,211	8,671	0,913	0,018	0,028	0,028	1 665,887	0,538	3,607	0,632	26,014	2,738	0,053	0,084	0,084	4 997,661	1,613
Excavation	0,288	0,061	2,319	0,262	0,005	0,008	0,008	477,850	0,155	2,180	0,461	17,084	1,996	0,038	0,061	0,061	3 636,790	1,177	2,180	0,461	17,084	1,996	0,038	0,061	0,061	3 636,790	1,177
Total																			**3 086,325**	**108,684**	**4 696,879**	**1 015,731**	**8,590**	**12,537**	**12,537**	**790 286**	**181,251**

WPWMA EIR
Construction Emissions - Proposed Project Exhaust Emissions
Plan Concept 2

Unlined Area Excavation (3 of 3)

Construction Period:	01.01.2026	to	
Number of workers:		Duration (weeks):	

Off Road Equipment Type	Area Size	Number (ea)	Daily Hours	Annual Days Equipment Used
Demolition				
Scraper - CAT 657				
Water Truck - 4000 gal, 3 axle, 58000 gvw				
Site Preparation (21 ac)	***21 ac***	***7***	***56***	***10***
Graders	21	0	0	0
Tractors/Loaders/Backhoes	21	4	8	10
Rubber Tired Dozers	21	3	8	10
Scrapers	21	0	0	0
Grading (0 ac)	***0 ac***	***0***	***0***	***0***
Rubber Tired Dozers	0	0	0	0
Concrete/Industrial Saws	0	0	0	0
Tractors/Loaders/Backhoes	0	0	0	0
Graders	0	0	0	0
Excavators	0	0	0	0
Scrapers	0	0	0	0
Building Construction (0 ac)	***0 ac***	***0***	***0***	***0***
Cranes	0	0	0	0
Forklifts	0	0	0	0
Tractors/Loaders/Backhoes	0	0	0	0
Welders	0	0	0	0
Generator Sets	0	0	0	0
Paving - Asphalt (0 ac)	***0 ac***	***0***	***0***	***0***
Pavers	0	0	0	0
Cement and Mortar Mixers	0	0	0	0
Rollers	0	0	0	0
Tractors/Loaders/Backhoes	0	0	0	0
Paving Equipment	0	0	0	0
Paving - Concrete (0 ac)	***0 ac***	***0***	***0***	***0***
Pavers	0	0	0	0
Cement and Mortar Mixers	0	0	0	0
Rollers	0	0	0	0
Tractors/Loaders/Backhoes	0	0	0	0
Paving Equipment	0	0	0	0
Site Preparation - Pond (0 ac)	***0 ac***	***0***	***0***	***0***
Graders	0	0	0	0
Tractors/Loaders/Backhoes	0	0	0	0
Rubber Tired Dozers	0	0	0	0
Scrapers	0	0	0	0
Excavation (1215334 cy)	***1215334 cy***	***16***	***80***	***116***
Scrapers	1215334	4	8	116
Rubber Tired Dozers	1215334	2	8	116
Off-Highway Trucks	1215334	2	8	116
Other General Industrial Equipment	1215334	8	2	116

Area Size Reference Table	Size	Unit
Site Preparation	21	ac
Grading	0	ac
Building Construction	0	ac
Paving - Asphalt	0	ac
Paving - Concrete	0	ac
Site Preparation - Pond	0	ac
Excavation	1 215 334	cy

WPWMA EIR
Construction Emissions - Proposed Project Exhaust Emissions

Unlined Area Excavation (3 of 3)

Emission Factors					Emissions Factor (g/bhp-hr)								
Equipment Type	**HorsePower**	**Load Factor**	**Construction Year**	**Year+Equipment Type+HorsePower**	**CO**	**NOX**	**PM10**	**PM2.5**	**ROG**	**TOG**	**SO2**	**CO2**	**CH4**
Demolition													
Site Preparation (21 ac)													
Graders													
Tractors/Loaders/Backhoes	97	0,37	2026	2025Tractors/Loaders/Backhoes120	3,70E+00	2,60E-01	8,00E-03	8,00E-03	6,00E-02	2,48E-01	5,00E-03	4,77E+02	1,54E-01
Rubber Tired Dozers	247	0,4	2026	2025Rubber Tired Dozers250	2,20E+00	2,60E-01	8,00E-03	8,00E-03	6,00E-02	4,43E-01	5,00E-03	4,75E+02	1,53E-01
Scrapers													
Grading (0 ac)													
Rubber Tired Dozers													
Concrete/Industrial Saws													
Tractors/Loaders/Backhoes													
Graders													
Excavators													
Scrapers													
Building Construction (0 ac)													
Cranes													
Forklifts													
Tractors/Loaders/Backhoes													
Welders													
Generator Sets													
Paving - Asphalt (0 ac)													
Pavers													
Cement and Mortar Mixers													
Rollers													
Tractors/Loaders/Backhoes													
Paving Equipment													
Paving - Concrete (0 ac)													
Pavers													
Cement and Mortar Mixers													
Rollers													
Tractors/Loaders/Backhoes													
Paving Equipment													
Site Preparation - Pond (0 ac)													
Graders													
Tractors/Loaders/Backhoes													
Rubber Tired Dozers													
Scrapers													
Excavation (1215334 cy)													
Scrapers	367	0,48	2026	2025Scrapers500	2,20E+00	2,60E-01	8,00E-03	8,00E-03	6,00E-02	2,57E-01	5,00E-03	4,73E+02	1,53E-01
Rubber Tired Dozers	247	0,4	2026	2025Rubber Tired Dozers250	2,20E+00	2,60E-01	8,00E-03	8,00E-03	6,00E-02	4,43E-01	5,00E-03	4,75E+02	1,53E-01
Off-Highway Trucks	402	0,38	2026	2025Off-Highway Trucks500	2,20E+00	2,60E-01	8,00E-03	8,00E-03	6,00E-02	2,11E-01	5,00E-03	4,75E+02	1,54E-01
Other General Industrial Equipn	88	0,34	2026	2025Other General Industrial Equipment3	3,70E+00	2,60E-01	8,00E-03	8,00E-03	6,00E-02	3,06E-01	5,00E-03	4,70E+02	1,52E-01

WPWMA EIR
Construction Emissions - Proposed Project Exhaust Emissions

Unlined Area Excavation (3 of 3)

	Hourly Emissions (lb/hr)									Daily Emissions (lb/day)									Annual Emissions (lb/yr)								
Equipment Type	**TOG**	**ROG**	**CO**	**NOX**	**SO2**	**PM10**	**PM2.5**	**CO2**	**CH4**	**TOG**	**ROG**	**CO**	**NOX**	**SO2**	**PM10**	**PM2.5**	**CO2**	**CH4**	**TOG**	**ROG**	**CO**	**NOX**	**SO2**	**PM10**	**PM2.5**	**CO2**	**CH4**
Demolition																											
Site Preparation (21 ac)																											
Graders																											
Tractors/Loaders/Backhoes	0,079	0,019	1,171	0,082	0,002	0,003	0,003	151,028	0,049	0,629	0,152	9,368	0,658	0,013	0,020	0,020	1 208,224	0,390	6,290	1,519	93,683	6,583	0,127	0,203	0,203	12 082,243	3,899
Rubber Tired Dozers	0,289	0,039	1,438	0,170	0,003	0,005	0,005	310,110	0,100	2,314	0,314	11,501	1,359	0,026	0,042	0,042	2 480,882	0,800	23,138	3,137	115,007	13,592	0,261	0,418	0,418	24 808,825	7,998
Scrapers																											
Grading (0 ac)																											
Rubber Tired Dozers																											
Concrete/Industrial Saws																											
Tractors/Loaders/Backhoes																											
Graders																											
Excavators																											
Scrapers																											
Building Construction (0 ac)																											
Cranes																											
Forklifts																											
Tractors/Loaders/Backhoes																											
Welders																											
Generator Sets																											
Paving - Asphalt (0 ac)																											
Pavers																											
Cement and Mortar Mixers																											
Rollers																											
Tractors/Loaders/Backhoes																											
Paving Equipment																											
Paving - Concrete (0 ac)																											
Pavers																											
Cement and Mortar Mixers																											
Rollers																											
Tractors/Loaders/Backhoes																											
Paving Equipment																											
Site Preparation - Pond (0 ac)																											
Graders																											
Tractors/Loaders/Backhoes																											
Rubber Tired Dozers																											
Scrapers																											
Excavation (1215334 cy)																											
Scrapers	0,400	0,093	3,418	0,404	0,008	0,012	0,012	734,074	0,238	3,198	0,746	27,341	3,231	0,062	0,099	0,099	5 872,593	1,901	370,968	86,497	3 171,557	374,820	7,208	11,533	11,533	681 220,813	220,567
Rubber Tired Dozers	0,193	0,026	0,958	0,113	0,002	0,003	0,003	206,740	0,067	1,543	0,209	7,667	0,906	0,017	0,028	0,028	1 653,922	0,533	178,931	24,256	889,390	105,110	2,021	3,234	3,234	191 854,912	61,853
Off-Highway Trucks	0,142	0,040	1,482	0,175	0,003	0,005	0,005	319,919	0,104	1,137	0,323	11,855	1,401	0,027	0,043	0,043	2 559,353	0,830	131,860	37,504	1 375,134	162,516	3,125	5,000	5,000	296 884,921	96,259
Other General Industrial Equipr	0,162	0,032	1,952	0,137	0,003	0,004	0,004	248,018	0,080	0,323	0,063	3,905	0,274	0,005	0,008	0,008	496,037	0,160	37,511	7,346	452,977	31,831	0,612	0,979	0,979	57 540,264	18,609

Total per Phase																											
Site Preparation	0,368	0,058	2,609	0,252	0,005	0,008	0,008	461,138	0,149	2,943	0,466	20,869	2,017	0,039	0,062	0,062	3 689,107	1,190	29,427	4,656	208,690	20,175	0,388	0,621	0,621	36 891,068	11,897
Grading	0,000	0,000	0,000	0,000	0,000	0,000	0,000	0,000	0,000	0,000	0,000	0,000	0,000	0,000	0,000	0,000	0,000	0,000	0,000	0,000	0,000	0,000	0,000	0,000	0,000	0,000	0,000
Building Construction	0,000	0,000	0,000	0,000	0,000	0,000	0,000	0,000	0,000	0,000	0,000	0,000	0,000	0,000	0,000	0,000	0,000	0,000	0,000	0,000	0,000	0,000	0,000	0,000	0,000	0,000	0,000
Paving - Asphalt	0,000	0,000	0,000	0,000	0,000	0,000	0,000	0,000	0,000	0,000	0,000	0,000	0,000	0,000	0,000	0,000	0,000	0,000	0,000	0,000	0,000	0,000	0,000	0,000	0,000	0,000	0,000
Paving - Concrete	0,000	0,000	0,000	0,000	0,000	0,000	0,000	0,000	0,000	0,000	0,000	0,000	0,000	0,000	0,000	0,000	0,000	0,000	0,000	0,000	0,000	0,000	0,000	0,000	0,000	0,000	0,000
Site Preparation - Pond	0,000	0,000	0,000	0,000	0,000	0,000	0,000	0,000	0,000	0,000	0,000	0,000	0,000	0,000	0,000	0,000	0,000	0,000	0,000	0,000	0,000	0,000	0,000	0,000	0,000	0,000	0,000
Excavation	0,896	0,191	7,810	0,829	0,016	0,026	0,026	1 508,752	0,488	6,201	1,341	50,768	5,813	0,112	0,179	0,179	10 581,904	3,425	719,270	155,602	5 889,058	674,277	12,967	20,747	20,747	1 227 500,910	397,289
Total																			**748,697**	**160,258**	**6 097,748**	**694,452**	**13,355**	**21,368**	**21,368**	**1 264 391,978**	**409,186**

WPWMA EIR
Construction Emissions - Proposed Project Exhaust Emissions
Plan Concept 2

Landfill Construction

Construction Period:	01.01.2031	to	
Number of workers:		Duration (weeks):	

Off Road Equipment Type	Area Size	Number (ea)	Daily Hours	Annual Days Equipment Used
Demolition				
Scraper - CAT 657				
Water Truck - 4000 gal, 3 axle, 58000 gvw				
Site Preparation (18.11 ac)	***18 ac***	***7***	***56***	***10***
Graders	18	0	0	0
Tractors/Loaders/Backhoes	18	4	8	10
Rubber Tired Dozers	18	3	8	10
Scrapers	18	0	0	0
Grading (18.11 ac)	***18 ac***	***8***	***64***	***30***
Rubber Tired Dozers	18	1	8	30
Concrete/Industrial Saws	18	0	0	0
Tractors/Loaders/Backhoes	18	2	8	30
Graders	18	1	8	30
Excavators	18	2	8	30
Scrapers	18	2	8	30
Building Construction (0 ac)	***0 ac***	***0***	***0***	***0***
Cranes	0	0	0	0
Forklifts	0	0	0	0
Tractors/Loaders/Backhoes	0	0	0	0
Welders	0	0	0	0
Generator Sets	0	0	0	0
Paving - Asphalt (0 ac)	***0 ac***	***0***	***0***	***0***
Pavers	0	0	0	0
Cement and Mortar Mixers	0	0	0	0
Rollers	0	0	0	0
Tractors/Loaders/Backhoes	0	0	0	0
Paving Equipment	0	0	0	0
Paving - Concrete (0 ac)	***0 ac***	***0***	***0***	***0***
Pavers	0	0	0	0
Cement and Mortar Mixers	0	0	0	0
Rollers	0	0	0	0
Tractors/Loaders/Backhoes	0	0	0	0
Paving Equipment	0	0	0	0
Site Preparation - Pond (0 ac)	***0 ac***	***0***	***0***	***0***
Graders	0	0	0	0
Tractors/Loaders/Backhoes	0	0	0	0
Rubber Tired Dozers	0	0	0	0
Scrapers	0	0	0	0
Excavation (1835000 cy)	***1835000 cy***	***24***	***120***	***175***
Scrapers	1835000	6	8	175
Rubber Tired Dozers	1835000	3	8	175
Off-Highway Trucks	1835000	3	8	175
Other General Industrial Equipment	1835000	12	2	175

Area Size Reference Table	Size	Unit
Site Preparation	18	ac
Grading	18	ac
Building Construction	0	ac
Paving - Asphalt	0	ac
Paving - Concrete	0	ac
Site Preparation - Pond	0	ac
Excavation	1 835 000	cy

WPWMA EIR
Construction Emissions - Proposed Project Exhaust Emissions

Landfill Construction

Emission Factors					Emissions Factor (g/bhp-hr)								
Equipment Type	**HorsePower**	**Load Factor**	**Construction Year**	**Year+Equipment Type+HorsePower**	**CO**	**NOX**	**PM10**	**PM2.5**	**ROG**	**TOG**	**SO2**	**CO2**	**CH4**
Demolition													
Site Preparation (18.11 ac)													
Graders													
Tractors/Loaders/Backhoes	97	0,37	2026	2025Tractors/Loaders/Backhoes120	3,70E+00	2,60E-01	8,00E-03	8,00E-03	6,00E-02	2,48E-01	5,00E-03	4,77E+02	1,54E-01
Rubber Tired Dozers	247	0,4	2026	2025Rubber Tired Dozers250	2,20E+00	2,60E-01	8,00E-03	8,00E-03	6,00E-02	4,43E-01	5,00E-03	4,75E+02	1,53E-01
Scrapers													
Grading (18.11 ac)													
Rubber Tired Dozers	247	0,4	2026	2025Rubber Tired Dozers250	2,20E+00	2,60E-01	8,00E-03	8,00E-03	6,00E-02	4,43E-01	5,00E-03	4,75E+02	1,53E-01
Concrete/Industrial Saws													
Tractors/Loaders/Backhoes	97	0,37	2026	2025Tractors/Loaders/Backhoes120	3,70E+00	2,60E-01	8,00E-03	8,00E-03	6,00E-02	2,48E-01	5,00E-03	4,77E+02	1,54E-01
Graders	187	0,41	2026	2025Graders250	2,20E+00	2,60E-01	8,00E-03	8,00E-03	6,00E-02	2,74E-01	5,00E-03	4,73E+02	1,53E-01
Excavators	158	0,38	2026	2025Excavators175	2,20E+00	2,60E-01	8,00E-03	8,00E-03	6,00E-02	1,88E-01	5,00E-03	4,72E+02	1,53E-01
Scrapers	367	0,48	2026	2025Scrapers500	2,20E+00	2,60E-01	8,00E-03	8,00E-03	6,00E-02	2,57E-01	5,00E-03	4,73E+02	1,53E-01
Building Construction (0 ac)													
Cranes													
Forklifts													
Tractors/Loaders/Backhoes													
Welders													
Generator Sets													
Paving - Asphalt (0 ac)													
Pavers													
Cement and Mortar Mixers													
Rollers													
Tractors/Loaders/Backhoes													
Paving Equipment													
Paving - Concrete (0 ac)													
Pavers													
Cement and Mortar Mixers													
Rollers													
Tractors/Loaders/Backhoes													
Paving Equipment													
Site Preparation - Pond (0 ac)													
Graders													
Tractors/Loaders/Backhoes													
Rubber Tired Dozers													
Scrapers													
Excavation (1835000 cy)													
Scrapers	367	0,48	2026	2025Scrapers500	2,20E+00	2,60E-01	8,00E-03	8,00E-03	6,00E-02	2,57E-01	5,00E-03	4,73E+02	1,53E-01
Rubber Tired Dozers	247	0,4	2026	2025Rubber Tired Dozers250	2,20E+00	2,60E-01	8,00E-03	8,00E-03	6,00E-02	4,43E-01	5,00E-03	4,75E+02	1,53E-01
Off-Highway Trucks	402	0,38	2026	2025Off-Highway Trucks500	2,20E+00	2,60E-01	8,00E-03	8,00E-03	6,00E-02	2,11E-01	5,00E-03	4,75E+02	1,54E-01
Other General Industrial Equipn	88	0,34	2026	2025Other General Industrial Equipment3	3,70E+00	2,60E-01	8,00E-03	8,00E-03	6,00E-02	3,06E-01	5,00E-03	4,70E+02	1,52E-01

WPWMA EIR
Construction Emissions - Proposed Project Exhaust Emissions

Landfill Construction

	Hourly Emissions (lb/hr)									Daily Emissions (lb/day)									Annual Emissions (lb/yr)								
Equipment Type	**TOG**	**ROG**	**CO**	**NOX**	**SO2**	**PM10**	**PM2.5**	**CO2**	**CH4**	**TOG**	**ROG**	**CO**	**NOX**	**SO2**	**PM10**	**PM2.5**	**CO2**	**CH4**	**TOG**	**ROG**	**CO**	**NOX**	**SO2**	**PM10**	**PM2.5**	**CO2**	**CH4**
Demolition																											
Site Preparation (18.11 ac)																											
Graders																											
Tractors/Loaders/Backhoes	0,079	0,019	1,171	0,082	0,002	0,003	0,003	151,028	0,049	0,629	0,152	9,368	0,658	0,013	0,020	0,020	1 208,224	0,390	6,290	1,519	93,683	6,583	0,127	0,203	0,203	12 082,243	3,899
Rubber Tired Dozers	0,289	0,039	1,438	0,170	0,003	0,005	0,005	310,110	0,100	2,314	0,314	11,501	1,359	0,026	0,042	0,042	2 480,882	0,800	23,138	3,137	115,007	13,592	0,261	0,418	0,418	24 808,825	7,998
Scrapers																											
Grading (18.11 ac)																											
Rubber Tired Dozers	0,096	0,013	0,479	0,057	0,001	0,002	0,002	103,370	0,033	0,771	0,105	3,834	0,453	0,009	0,014	0,014	826,961	0,267	23,138	3,137	115,007	13,592	0,261	0,418	0,418	24 808,825	7,998
Concrete/Industrial Saws																											
Tractors/Loaders/Backhoes	0,039	0,009	0,586	0,041	0,001	0,001	0,001	75,514	0,024	0,314	0,076	4,684	0,329	0,006	0,010	0,010	604,112	0,195	9,435	2,279	140,524	9,875	0,190	0,304	0,304	18 123,364	5,849
Graders	0,046	0,010	0,372	0,044	0,001	0,001	0,001	80,030	0,026	0,370	0,081	2,975	0,352	0,007	0,011	0,011	640,240	0,207	11,107	2,434	89,247	10,547	0,203	0,325	0,325	19 207,204	6,207
Excavators	0,050	0,016	0,582	0,069	0,001	0,002	0,002	125,085	0,041	0,398	0,127	4,659	0,551	0,011	0,017	0,017	1 000,677	0,324	11,933	3,812	139,778	16,519	0,318	0,508	0,508	30 020,301	9,721
Scrapers	0,200	0,047	1,709	0,202	0,004	0,006	0,006	367,037	0,119	1,599	0,373	13,671	1,616	0,031	0,050	0,050	2 936,297	0,951	47,970	11,185	410,115	48,468	0,932	1,491	1,491	88 088,898	28,522
Building Construction (0 ac)																											
Cranes																											
Forklifts																											
Tractors/Loaders/Backhoes																											
Welders																											
Generator Sets																											
Paving - Asphalt (0 ac)																											
Pavers																											
Cement and Mortar Mixers																											
Rollers																											
Tractors/Loaders/Backhoes																											
Paving Equipment																											
Paving - Concrete (0 ac)																											
Pavers																											
Cement and Mortar Mixers																											
Rollers																											
Tractors/Loaders/Backhoes																											
Paving Equipment																											
Site Preparation - Pond (0 ac)																											
Graders																											
Tractors/Loaders/Backhoes																											
Rubber Tired Dozers																											
Scrapers																											
Excavation (1835000 cy)																											
Scrapers	0,600	0,140	5,126	0,606	0,012	0,019	0,019	1 101,111	0,357	4,797	1,118	41,012	4,847	0,093	0,149	0,149	8 808,890	2,852	839,476	195,737	7 177,015	848,193	16,311	26,098	26,098	1 541 555,719	499,129
Rubber Tired Dozers	0,289	0,039	1,438	0,170	0,003	0,005	0,005	310,110	0,100	2,314	0,314	11,501	1,359	0,026	0,042	0,042	2 480,882	0,800	404,909	54,890	2 012,628	237,856	4,574	7,319	7,319	434 154,434	139,969
Off-Highway Trucks	0,213	0,061	2,223	0,263	0,005	0,008	0,008	479,879	0,156	1,705	0,485	17,782	2,101	0,040	0,065	0,065	3 839,029	1,245	298,389	84,868	3 111,833	367,762	7,072	11,316	11,316	671 830,102	217,828
Other General Industrial Equipt	0,243	0,047	2,929	0,206	0,004	0,006	0,006	372,028	0,120	0,485	0,095	5,857	0,412	0,008	0,013	0,013	744,055	0,241	84,885	16,623	1 025,055	72,031	1,385	2,216	2,216	130 209,648	42,110

Total per Phase																											
Site Preparation	0,368	0,058	2,609	0,252	0,005	0,008	0,008	461,138	0,149	2,943	0,466	20,869	2,017	0,039	0,062	0,062	3 689,107	1,190	29,427	4,656	208,690	20,175	0,388	0,621	0,621	36 891,068	11,897
Grading	0,432	0,095	3,728	0,413	0,008	0,013	0,013	751,036	0,243	3,453	0,762	29,822	3,300	0,063	0,102	0,102	6 008,286	1,943	103,582	22,846	894,672	99,001	1,904	3,046	3,046	180 248,592	58,296
Building Construction	0,000	0,000	0,000	0,000	0,000	0,000	0,000	0,000	0,000	0,000	0,000	0,000	0,000	0,000	0,000	0,000	0,000	0,000	0,000	0,000	0,000	0,000	0,000	0,000	0,000	0,000	0,000
Paving - Asphalt	0,000	0,000	0,000	0,000	0,000	0,000	0,000	0,000	0,000	0,000	0,000	0,000	0,000	0,000	0,000	0,000	0,000	0,000	0,000	0,000	0,000	0,000	0,000	0,000	0,000	0,000	0,000
Paving - Concrete	0,000	0,000	0,000	0,000	0,000	0,000	0,000	0,000	0,000	0,000	0,000	0,000	0,000	0,000	0,000	0,000	0,000	0,000	0,000	0,000	0,000	0,000	0,000	0,000	0,000	0,000	0,000
Site Preparation - Pond	0,000	0,000	0,000	0,000	0,000	0,000	0,000	0,000	0,000	0,000	0,000	0,000	0,000	0,000	0,000	0,000	0,000	0,000	0,000	0,000	0,000	0,000	0,000	0,000	0,000	0,000	0,000
Excavation	1,345	0,287	11,715	1,244	0,024	0,038	0,038	2 263,128	0,732	9,301	2,012	76,152	8,719	0,168	0,268	0,268	15 872,857	5,137	1 627,659	352,117	13 326,531	1 525,842	29,343	46,949	46,949	2 777 749,904	899,037
Total																			**1 760,668**	**379,619**	**14 429,893**	**1 645,018**	**31,635**	**50,616**	**50,616**	**2 994 889,564**	**969,230**

WPWMA EIR
Construction Emissions - Proposed Project Exhaust Emissions
Plan Concept 2

Landfill Lining & Partial Closure

Construction Period:	01.01.2032	to	
Number of workers:		Duration (weeks):	

Off Road Equipment Type	Area Size	Number (ea)	Daily Hours	Annual Days Equipment Used
Demolition				
Scraper - CAT 657				
Water Truck - 4000 gal, 3 axle, 58000 gvw				
Site Preparation (0 ac)	***0 ac***	***0***	***0***	***0***
Graders	0	0	0	0
Tractors/Loaders/Backhoes	0	0	0	0
Rubber Tired Dozers	0	0	0	0
Scrapers	0	0	0	0
Grading (0 ac)	***0 ac***	***0***	***0***	***0***
Rubber Tired Dozers	0	0	0	0
Concrete/Industrial Saws	0	0	0	0
Tractors/Loaders/Backhoes	0	0	0	0
Graders	0	0	0	0
Excavators	0	0	0	0
Scrapers	0	0	0	0
Building Construction (0 ac)	***0 ac***	***0***	***0***	***0***
Cranes	0	0	0	0
Forklifts	0	0	0	0
Tractors/Loaders/Backhoes	0	0	0	0
Welders	0	0	0	0
Generator Sets	0	0	0	0
Paving - Asphalt (0 ac)	***0 ac***	***0***	***0***	***0***
Pavers	0	0	0	0
Cement and Mortar Mixers	0	0	0	0
Rollers	0	0	0	0
Tractors/Loaders/Backhoes	0	0	0	0
Paving Equipment	0	0	0	0
Paving - Concrete (0 ac)	***0 ac***	***0***	***0***	***0***
Pavers	0	0	0	0
Cement and Mortar Mixers	0	0	0	0
Rollers	0	0	0	0
Tractors/Loaders/Backhoes	0	0	0	0
Paving Equipment	0	0	0	0
Site Preparation - Pond (0 ac)	***0 ac***	***0***	***0***	***0***
Graders	0	0	0	0
Tractors/Loaders/Backhoes	0	0	0	0
Rubber Tired Dozers	0	0	0	0
Scrapers	0	0	0	0
Excavation (131750.25 cy)	***131750 cy***	***4***	***26***	***13***
Scrapers	131750	1	8	13
Rubber Tired Dozers	131750	1	8	13
Off-Highway Trucks	131750	1	8	13
Other General Industrial Equipment	131750	1	2	13
Lining & Partial Closure (18.11 ac)	***18 ac***	***44***	***216***	***175***
Scrapers	18	2	8	175
Scrapers	18	1	8	175
Off-Highway Trucks	18	2	8	175
Rubber Tired Dozers	18	1	8	175
Rubber Tired Dozers	18	1	8	175
Rollers	18	1	4	175
Graders	18	1	8	175
Bore/Drill Rigs	18	1	8	175
Tractors/Loaders/Backhoes	18	2	6	175
Off-Highway Trucks	18	2	8	175
Off-Highway Trucks	18	1	8	175
Excavators	18	1	8	175
Forklifts	18	2	4	175
Other General Industrial Equipment	18	20	2	175
Generator Sets	18	6	8	175

Area Size Reference Table	Size	Unit
Site Preparation	0	ac
Grading	0	ac
Building Construction	0	ac
Paving - Asphalt	0	ac
Paving - Concrete	0	ac
Site Preparation - Pond	0	ac
Excavation	131 750	cy
Lining & Partial Closure	18	ac

WPWMA EIR
Construction Emissions - Proposed Project Exhaust Emissions

Landfill Lining & Partial Closure

Emission Factors					Emissions Factor (g/bhp-hr)								
Equipment Type	**HorsePower**	**Load Factor**	**Construction Year**	**Year+Equipment Type+HorsePower**	**CO**	**NOX**	**PM10**	**PM2.5**	**ROG**	**TOG**	**SO2**	**CO2**	**CH4**
Demolition													
Site Preparation (0 ac)													
Graders													
Tractors/Loaders/Backhoes													
Rubber Tired Dozers													
Scrapers													
Grading (0 ac)													
Rubber Tired Dozers													
Concrete/Industrial Saws													
Tractors/Loaders/Backhoes													
Graders													
Excavators													
Scrapers													
Building Construction (0 ac)													
Cranes													
Forklifts													
Tractors/Loaders/Backhoes													
Welders													
Generator Sets													
Paving - Asphalt (0 ac)													
Pavers													
Cement and Mortar Mixers													
Rollers													
Tractors/Loaders/Backhoes													
Paving Equipment													
Paving - Concrete (0 ac)													
Pavers													
Cement and Mortar Mixers													
Rollers													
Tractors/Loaders/Backhoes													
Paving Equipment													
Site Preparation - Pond (0 ac)													
Graders													
Tractors/Loaders/Backhoes													
Rubber Tired Dozers													
Scrapers													
Excavation (131750.25 cy)													
Scrapers	367	0,48	2032	2030Scrapers500	2,20E+00	2,60E-01	8,00E-03	8,00E-03	6,00E-02	2,70E+00	5,00E-03	5,68E+02	2,30E-02
Rubber Tired Dozers	247	0,4	2032	2030Rubber Tired Dozers250	2,20E+00	2,60E-01	8,00E-03	8,00E-03	6,00E-02	1,56E+00	6,00E-03	5,68E+02	3,00E-02
Off-Highway Trucks	402	0,38	2032	2030Off-Highway Trucks500	2,20E+00	2,60E-01	8,00E-03	8,00E-03	6,00E-02	1,52E+00	5,00E-03	5,68E+02	1,90E-02
Other General Industrial Equipn	88	0,34	2032	2030Other General Industrial Equipment1	3,70E+00	2,60E-01	8,00E-03	8,00E-03	6,00E-02	7,09E+00	6,00E-03	5,68E+02	2,70E-02
Lining & Partial Closure (18.11 ac)													
Scrapers	367	0,48	2032	2030Scrapers500	2,20E+00	2,60E-01	8,00E-03	8,00E-03	6,00E-02	2,70E+00	5,00E-03	5,68E+02	2,30E-02
Scrapers	367	0,48	2032	2030Scrapers500	2,20E+00	2,60E-01	8,00E-03	8,00E-03	6,00E-02	2,70E+00	5,00E-03	5,68E+02	2,30E-02
Off-Highway Trucks	402	0,38	2032	2030Off-Highway Trucks500	2,20E+00	2,60E-01	8,00E-03	8,00E-03	6,00E-02	1,52E+00	5,00E-03	5,68E+02	1,90E-02
Rubber Tired Dozers	247	0,4	2032	2030Rubber Tired Dozers250	2,20E+00	2,60E-01	8,00E-03	8,00E-03	6,00E-02	1,56E+00	6,00E-03	5,68E+02	3,00E-02
Rubber Tired Dozers	247	0,4	2032	2030Rubber Tired Dozers250	2,20E+00	2,60E-01	8,00E-03	8,00E-03	6,00E-02	1,56E+00	6,00E-03	5,68E+02	3,00E-02
Rollers	80	0,38	2032	2030Rollers120	3,70E+00	2,60E-01	8,00E-03	8,00E-03	6,00E-02	6,53E+00	6,00E-03	5,68E+02	2,70E-02
Graders	187	0,41	2032	2030Graders250	2,20E+00	2,60E-01	8,00E-03	8,00E-03	6,00E-02	3,11E+00	6,00E-03	5,68E+02	1,90E-02
Bore/Drill Rigs	221	0,5	2032	2030Bore/Drill Rigs250	2,20E+00	2,60E-01	8,00E-03	8,00E-03	6,00E-02	6,36E+00	6,00E-03	5,68E+02	1,10E-02
Tractors/Loaders/Backhoes	97	0,37	2032	2030Tractors/Loaders/Backhoes120	3,70E+00	2,60E-01	8,00E-03	8,00E-03	6,00E-02	2,29E+00	6,00E-03	5,68E+02	2,40E-02
Off-Highway Trucks	402	0,38	2032	2030Off-Highway Trucks500	2,20E+00	2,60E-01	8,00E-03	8,00E-03	6,00E-02	1,52E+00	5,00E-03	5,68E+02	1,90E-02
Off-Highway Trucks	402	0,38	2032	2030Off-Highway Trucks500	2,20E+00	2,60E-01	8,00E-03	8,00E-03	6,00E-02	1,52E+00	5,00E-03	5,68E+02	1,90E-02
Excavators	158	0,38	2032	2030Excavators175	2,20E+00	2,60E-01	8,00E-03	8,00E-03	6,00E-02	3,91E+00	6,00E-03	5,68E+02	1,90E-02
Forklifts	89	0,2	2032	2030Forklifts120	3,70E+00	2,60E-01	8,00E-03	8,00E-03	6,00E-02	1,48E+00	6,00E-03	5,68E+02	2,50E-02
Other General Industrial Equipn	88	0,34	2032	2030Other General Industrial Equipment1	3,70E+00	2,60E-01	8,00E-03	8,00E-03	6,00E-02	7,09E+00	6,00E-03	5,68E+02	2,70E-02
Generator Sets	84	0,74	2032	2030Generator Sets120	3,70E+00	2,60E-01	8,00E-03	8,00E-03	6,00E-02	3,62E+00	6,00E-03	5,68E+02	1,60E-02

WPWMA EIR
Construction Emissions - Proposed Project Exhaust Emissions

Landfill Lining & Partial Closure

	Hourly Emissions (lb/hr)									Daily Emissions (lb/day)									Annual Emissions (lb/yr)								
Equipment Type	**TOG**	**ROG**	**CO**	**NOX**	**SO2**	**PM10**	**PM2.5**	**CO2**	**CH4**	**TOG**	**ROG**	**CO**	**NOX**	**SO2**	**PM10**	**PM2.5**	**CO2**	**CH4**	**TOG**	**ROG**	**CO**	**NOX**	**SO2**	**PM10**	**PM2.5**	**CO2**	**CH4**
Demolition																											
Site Preparation (0 ac)																											
Graders																											
Tractors/Loaders/Backhoes																											
Rubber Tired Dozers																											
Scrapers																											
Grading (0 ac)																											
Rubber Tired Dozers																											
Concrete/Industrial Saws																											
Tractors/Loaders/Backhoes																											
Graders																											
Excavators																											
Scrapers																											
Building Construction (0 ac)																											
Cranes																											
Forklifts																											
Tractors/Loaders/Backhoes																											
Welders																											
Generator Sets																											
Paving - Asphalt (0 ac)																											
Pavers																											
Cement and Mortar Mixers																											
Rollers																											
Tractors/Loaders/Backhoes																											
Paving Equipment																											
Paving - Concrete (0 ac)																											
Pavers																											
Cement and Mortar Mixers																											
Rollers																											
Tractors/Loaders/Backhoes																											
Paving Equipment																											
Site Preparation - Pond (0 ac)																											
Graders																											
Tractors/Loaders/Backhoes																											
Rubber Tired Dozers																											
Scrapers																											
Excavation (131750.25 cy)																											
Scrapers	1,047	0,023	0,854	0,101	0,002	0,003	0,003	220,708	0,009	8,379	0,186	6,835	0,808	0,016	0,025	0,025	1 765,667	0,071	108,932	2,423	88,858	10,501	0,202	0,323	0,323	22 953,671	0,929
Rubber Tired Dozers	0,339	0,013	0,479	0,057	0,001	0,002	0,002	123,785	0,007	2,711	0,105	3,834	0,453	0,010	0,014	0,014	990,281	0,052	35,248	1,359	49,837	5,890	0,136	0,181	0,181	12 873,653	0,680
Off-Highway Trucks	0,512	0,020	0,741	0,088	0,002	0,003	0,003	191,391	0,006	4,095	0,162	5,927	0,700	0,013	0,022	0,022	1 531,127	0,051	53,238	2,101	77,055	9,106	0,175	0,280	0,280	19 904,648	0,665
Other General Industrial Equip	0,468	0,004	0,244	0,017	0,000	0,001	0,001	37,486	0,002	0,935	0,008	0,488	0,034	0,001	0,001	0,001	74,973	0,004	12,161	0,103	6,346	0,446	0,010	0,014	0,014	974,645	0,046
Lining & Partial Closure (18.11 ac)																											
Scrapers	2,095	0,047	1,709	0,202	0,004	0,006	0,006	441,417	0,018	16,759	0,373	13,671	1,616	0,031	0,050	0,050	3 531,334	0,143	2 932,790	65,246	2 392,338	282,731	5,437	8,699	8,699	617 983,441	25,011
Scrapers	1,047	0,023	0,854	0,101	0,002	0,003	0,003	220,708	0,009	8,379	0,186	6,835	0,808	0,016	0,025	0,025	1 765,667	0,071	1 466,395	32,623	1 196,169	141,365	2,719	4,350	4,350	308 991,721	12,505
Off-Highway Trucks	1,024	0,040	1,482	0,175	0,003	0,005	0,005	382,782	0,013	8,190	0,323	11,855	1,401	0,027	0,043	0,043	3 062,253	0,102	1 433,329	56,579	2 074,555	245,175	4,715	7,544	7,544	535 894,360	17,917
Rubber Tired Dozers	0,339	0,013	0,479	0,057	0,001	0,002	0,002	123,785	0,007	2,711	0,105	3,834	0,453	0,010	0,014	0,014	990,281	0,052	474,492	18,297	670,876	79,285	1,830	2,440	2,440	173 299,171	9,148
Rubber Tired Dozers	0,339	0,013	0,479	0,057	0,001	0,002	0,002	123,785	0,007	2,711	0,105	3,834	0,453	0,010	0,014	0,014	990,281	0,052	474,492	18,297	670,876	79,285	1,830	2,440	2,440	173 299,171	9,148
Rollers	0,438	0,004	0,248	0,017	0,000	0,001	0,001	38,088	0,002	1,750	0,016	0,992	0,070	0,002	0,002	0,002	152,351	0,007	306,257	2,815	173,583	12,198	0,281	0,375	0,375	26 661,411	1,267
Graders	0,526	0,010	0,372	0,044	0,001	0,001	0,001	96,059	0,003	4,211	0,081	2,975	0,352	0,008	0,011	0,011	768,470	0,026	736,897	14,198	520,608	61,526	1,420	1,893	1,893	134 482,262	4,496
Bore/Drill Rigs	1,550	0,015	0,536	0,063	0,001	0,002	0,002	138,444	0,003	12,401	0,117	4,288	0,507	0,012	0,016	0,016	1 107,551	0,021	2 170,135	20,463	750,322	88,674	2,046	2,728	2,728	193 821,442	3,752
Tractors/Loaders/Backhoes	0,362	0,009	0,586	0,041	0,001	0,001	0,001	89,932	0,004	2,170	0,057	3,513	0,247	0,006	0,008	0,008	539,593	0,023	379,676	9,970	614,793	43,202	0,997	1,329	1,329	94 428,754	3,988
Off-Highway Trucks	1,024	0,040	1,482	0,175	0,003	0,005	0,005	382,782	0,013	8,190	0,323	11,855	1,401	0,027	0,043	0,043	3 062,253	0,102	1 433,329	56,579	2 074,555	245,175	4,715	7,544	7,544	535 894,360	17,917
Off-Highway Trucks	0,512	0,020	0,741	0,088	0,002	0,003	0,003	191,391	0,006	4,095	0,162	5,927	0,700	0,013	0,022	0,022	1 531,127	0,051	716,664	28,289	1 037,278	122,587	2,357	3,772	3,772	267 947,180	8,958
Excavators	0,518	0,008	0,291	0,034	0,001	0,001	0,001	75,223	0,003	4,145	0,064	2,330	0,275	0,006	0,008	0,008	601,786	0,020	725,311	11,119	407,686	48,181	1,112	1,482	1,482	105 312,573	3,521
Forklifts	0,116	0,005	0,290	0,020	0,000	0,001	0,001	44,603	0,002	0,465	0,019	1,162	0,082	0,002	0,003	0,003	178,411	0,008	81,310	3,296	203,275	14,284	0,330	0,440	0,440	31 221,915	1,373
Other General Industrial Equip	9,355	0,079	4,881	0,343	0,008	0,011	0,011	749,727	0,036	18,710	0,158	9,762	0,686	0,016	0,021	0,021	1 499,454	0,071	3 274,174	27,704	1 708,425	120,052	2,770	3,694	3,694	262 404,413	12,467
Generator Sets	2,973	0,049	3,042	0,214	0,005	0,007	0,007	467,276	0,013	23,786	0,395	24,338	1,710	0,039	0,053	0,053	3 738,210	0,105	4 162,491	69,068	4 259,186	299,294	6,907	9,209	9,209	654 186,831	18,418

Total per Phase																											
Site Preparation	0,000	0,000	0,000	0,000	0,000	0,000	0,000	0,000	0,000	0,000	0,000	0,000	0,000	0,000	0,000	0,000	0,000	0,000	0,000	0,000	0,000	0,000	0,000	0,000	0,000	0,000	0,000
Grading	0,000	0,000	0,000	0,000	0,000	0,000	0,000	0,000	0,000	0,000	0,000	0,000	0,000	0,000	0,000	0,000	0,000	0,000	0,000	0,000	0,000	0,000	0,000	0,000	0,000	0,000	0,000
Building Construction	0,000	0,000	0,000	0,000	0,000	0,000	0,000	0,000	0,000	0,000	0,000	0,000	0,000	0,000	0,000	0,000	0,000	0,000	0,000	0,000	0,000	0,000	0,000	0,000	0,000	0,000	0,000
Paving - Asphalt	0,000	0,000	0,000	0,000	0,000	0,000	0,000	0,000	0,000	0,000	0,000	0,000	0,000	0,000	0,000	0,000	0,000	0,000	0,000	0,000	0,000	0,000	0,000	0,000	0,000	0,000	0,000
Paving - Concrete	0,000	0,000	0,000	0,000	0,000	0,000	0,000	0,000	0,000	0,000	0,000	0,000	0,000	0,000	0,000	0,000	0,000	0,000	0,000	0,000	0,000	0,000	0,000	0,000	0,000	0,000	0,000
Site Preparation - Pond	0,000	0,000	0,000	0,000	0,000	0,000	0,000	0,000	0,000	0,000	0,000	0,000	0,000	0,000	0,000	0,000	0,000	0,000	0,000	0,000	0,000	0,000	0,000	0,000	0,000	0,000	0,000
Excavation	2,366	0,061	2,319	0,262	0,005	0,008	0,008	573,371	0,024	16,121	0,461	17,084	1,996	0,040	0,061	0,061	4 362,047	0,178	209,579	5,987	222,095	25,944	0,523	0,798	0,798	56 706,616	2,320
Lining & Partial Closure	22,217	0,376	17,473	1,631	0,035	0,050	0,050	3 566,001	0,137	118,673	2,483	107,169	10,760	0,226	0,331	0,331	23 519,023	0,856	20 767,743	434,542	18 754,527	1 883,015	39,466	57,939	57,939	4 115 829,006	149,886
Total																			**20 977,323**	**440,529**	**18 976,622**	**1 908,959**	**39,989**	**58,737**	**58,737**	**4 172 536**	**152,206**

WPWMA EIR
Construction Emissions - Proposed Project Exhaust Emissions
Plan Concept 2

Admin Building

Construction Period:	01.01.2032	to	
Number of workers:		Duration (weeks):	

Off Road Equipment Type	Area Size	Number (ea)	Daily Hours	Annual Days Equipment Used
Demolition				
Scraper - CAT 657				
Water Truck - 4000 gal, 3 axle, 58000 gvw				
Site Preparation (1 ac)	***1 ac***	***2***	***16***	***2***
Graders	1	1	8	2
Tractors/Loaders/Backhoes	1	1	8	2
Rubber Tired Dozers	1	0	0	0
Scrapers	1	0	0	0
Grading (1 ac)	***1 ac***	***4***	***21***	***4***
Rubber Tired Dozers	1	1	1	4
Concrete/Industrial Saws	1	1	8	4
Tractors/Loaders/Backhoes	1	2	6	4
Graders	1	0	0	0
Excavators	1	0	0	0
Scrapers	1	0	0	0
Building Construction (1 ac)	***1 ac***	***5***	***32***	***200***
Cranes	1	1	4	200
Forklifts	1	2	6	200
Tractors/Loaders/Backhoes	1	2	8	200
Welders	1	0	0	0
Generator Sets	1	0	0	0
Paving - Asphalt (1 ac)	***1 ac***	***7***	***45***	***10***
Pavers	1	1	7	10
Cement and Mortar Mixers	1	4	6	10
Rollers	1	1	7	10
Tractors/Loaders/Backhoes	1	1	7	10
Paving Equipment	1	0	0	0
Paving - Concrete (1 ac)	***1 ac***	***7***	***45***	***10***
Pavers	1	1	7	10
Cement and Mortar Mixers	1	4	6	10
Rollers	1	1	7	10
Tractors/Loaders/Backhoes	1	1	7	10
Paving Equipment	1	0	0	0
Site Preparation - Pond (0 ac)	***0 ac***	***0***	***0***	***0***
Graders	0	0	0	0
Tractors/Loaders/Backhoes	0	0	0	0
Rubber Tired Dozers	0	0	0	0
Scrapers	0	0	0	0
Excavation (0 cy)	***0 cy***	***0***	***0***	***0***
Scrapers	0	0	0	0
Rubber Tired Dozers	0	0	0	0
Off-Highway Trucks	0	0	0	0
Other General Industrial Equipment	0	0	0	0

Area Size Reference Table	Size	Unit
Site Preparation	1	ac
Grading	1	ac
Building Construction	1	ac
Paving - Asphalt	1	ac
Paving - Concrete	1	ac
Site Preparation - Pond	0	ac
Excavation	0	cy

WPWMA EIR
Construction Emissions - Proposed Project Exhaust Emissions

Admin Building

Emission Factors					Emissions Factor (g/bhp-hr)								
Equipment Type	**HorsePower**	**Load Factor**	**Construction Year**	**Year+Equipment Type+HorsePower**	**CO**	**NOX**	**PM10**	**PM2.5**	**ROG**	**TOG**	**SO2**	**CO2**	**CH4**
Demolition													
Site Preparation (1 ac)													
Graders	187	0,41	2032	2030Graders250	2,20E+00	2,60E-01	8,00E-03	8,00E-03	6,00E-02	3,11E+00	6,00E-03	5,68E+02	1,90E-02
Tractors/Loaders/Backhoes	97	0,37	2032	2030Tractors/Loaders/Backhoes120	3,70E+00	2,60E-01	8,00E-03	8,00E-03	6,00E-02	2,29E+00	6,00E-03	5,68E+02	2,40E-02
Rubber Tired Dozers													
Scrapers													
Grading (1 ac)													
Rubber Tired Dozers	247	0,4	2032	2030Rubber Tired Dozers250	2,20E+00	2,60E-01	8,00E-03	8,00E-03	6,00E-02	1,56E+00	6,00E-03	5,68E+02	3,00E-02
Concrete/Industrial Saws	81	0,73	2032	2030Concrete/Industrial Saws120	3,70E+00	2,60E-01	8,00E-03	8,00E-03	6,00E-02	2,23E+00	6,00E-03	5,68E+02	1,90E-02
Tractors/Loaders/Backhoes	97	0,37	2032	2030Tractors/Loaders/Backhoes120	3,70E+00	2,60E-01	8,00E-03	8,00E-03	6,00E-02	2,29E+00	6,00E-03	5,68E+02	2,40E-02
Graders													
Excavators													
Scrapers													
Building Construction (1 ac)													
Cranes	231	0,29	2032	2030Cranes250	2,20E+00	2,60E-01	8,00E-03	8,00E-03	6,00E-02	2,84E+00	6,00E-03	5,68E+02	2,00E-02
Forklifts	89	0,2	2032	2030Forklifts120	3,70E+00	2,60E-01	8,00E-03	8,00E-03	6,00E-02	1,48E+00	6,00E-03	5,68E+02	2,50E-02
Tractors/Loaders/Backhoes	97	0,37	2032	2030Tractors/Loaders/Backhoes120	3,70E+00	2,60E-01	8,00E-03	8,00E-03	6,00E-02	2,29E+00	6,00E-03	5,68E+02	2,40E-02
Welders													
Generator Sets													
Paving - Asphalt (1 ac)													
Pavers	130	0,42	2032	2030Pavers175	2,20E+00	2,60E-01	8,00E-03	8,00E-03	6,00E-02	5,58E+00	6,00E-03	5,68E+02	2,70E-02
Cement and Mortar Mixers	9	0,56	2032	2030Cement and Mortar Mixers15	4,10E+00	2,75E+00	8,00E-03	8,00E-03	1,20E-01	1,08E+00	8,00E-03	5,68E+02	5,90E-02
Rollers	80	0,38	2032	2030Rollers120	3,70E+00	2,60E-01	8,00E-03	8,00E-03	6,00E-02	6,53E+00	6,00E-03	5,68E+02	2,70E-02
Tractors/Loaders/Backhoes	97	0,37	2032	2030Tractors/Loaders/Backhoes120	3,70E+00	2,60E-01	8,00E-03	8,00E-03	6,00E-02	2,29E+00	6,00E-03	5,68E+02	2,40E-02
Paving Equipment													
Paving - Concrete (1 ac)													
Pavers	130	0,42	2032	2030Pavers175	2,20E+00	2,60E-01	8,00E-03	8,00E-03	6,00E-02	5,58E+00	6,00E-03	5,68E+02	2,70E-02
Cement and Mortar Mixers	9	0,56	2032	2030Cement and Mortar Mixers15	4,10E+00	2,75E+00	8,00E-03	8,00E-03	1,20E-01	1,08E+00	8,00E-03	5,68E+02	5,90E-02
Rollers	80	0,38	2032	2030Rollers120	3,70E+00	2,60E-01	8,00E-03	8,00E-03	6,00E-02	6,53E+00	6,00E-03	5,68E+02	2,70E-02
Tractors/Loaders/Backhoes	97	0,37	2032	2030Tractors/Loaders/Backhoes120	3,70E+00	2,60E-01	8,00E-03	8,00E-03	6,00E-02	2,29E+00	6,00E-03	5,68E+02	2,40E-02
Paving Equipment													
Site Preparation - Pond (0 ac)													
Graders													
Tractors/Loaders/Backhoes													
Rubber Tired Dozers													
Scrapers													
Excavation (0 cy)													
Scrapers													
Rubber Tired Dozers													
Off-Highway Trucks													
Other General Industrial Equipr													

WPWMA EIR
Construction Emissions - Proposed Project Exhaust Emissions

Admin Building

	Hourly Emissions (lb/hr)									Daily Emissions (lb/day)									Annual Emissions (lb/yr)								
Equipment Type	**TOG**	**ROG**	**CO**	**NOX**	**SO2**	**PM10**	**PM2.5**	**CO2**	**CH4**	**TOG**	**ROG**	**CO**	**NOX**	**SO2**	**PM10**	**PM2.5**	**CO2**	**CH4**	**TOG**	**ROG**	**CO**	**NOX**	**SO2**	**PM10**	**PM2.5**	**CO2**	**CH4**
Demolition																											
Site Preparation (1 ac)																											
Graders	0,526	0,010	0,372	0,044	0,001	0,001	0,001	96,059	0,003	4,211	0,081	2,975	0,352	0,008	0,011	0,011	768,470	0,026	8,422	0,162	5,950	0,703	0,016	0,022	0,022	1 536,940	0,051
Tractors/Loaders/Backhoes	0,181	0,005	0,293	0,021	0,000	0,001	0,001	44,966	0,002	1,446	0,038	2,342	0,165	0,004	0,005	0,005	359,729	0,015	2,893	0,076	4,684	0,329	0,008	0,010	0,010	719,457	0,030
Rubber Tired Dozers																											
Scrapers																											
Grading (1 ac)																											
Rubber Tired Dozers	0,339	0,013	0,479	0,057	0,001	0,002	0,002	123,785	0,007	0,339	0,013	0,479	0,057	0,001	0,002	0,002	123,785	0,007	1,356	0,052	1,917	0,227	0,005	0,007	0,007	495,140	0,026
Concrete/Industrial Saws	0,290	0,008	0,482	0,034	0,001	0,001	0,001	74,083	0,002	2,321	0,063	3,859	0,271	0,006	0,008	0,008	592,665	0,020	9,286	0,250	15,435	1,085	0,025	0,033	0,033	2 370,660	0,079
Tractors/Loaders/Backhoes	0,362	0,009	0,586	0,041	0,001	0,001	0,001	89,932	0,004	2,170	0,057	3,513	0,247	0,006	0,008	0,008	539,593	0,023	8,678	0,228	14,052	0,987	0,023	0,030	0,030	2 158,372	0,091
Graders																											
Excavators																											
Scrapers																											
Building Construction (1 ac)																											
Cranes	0,419	0,009	0,325	0,038	0,001	0,001	0,001	83,931	0,003	1,675	0,035	1,300	0,154	0,004	0,005	0,005	335,723	0,012	334,956	7,089	259,931	30,719	0,709	0,945	0,945	67 144,659	2,363
Forklifts	0,116	0,005	0,290	0,020	0,000	0,001	0,001	44,603	0,002	0,697	0,028	1,742	0,122	0,003	0,004	0,004	267,616	0,012	139,389	5,651	348,472	24,487	0,565	0,753	0,753	53 523,284	2,355
Tractors/Loaders/Backhoes	0,362	0,009	0,586	0,041	0,001	0,001	0,001	89,932	0,004	2,893	0,076	4,684	0,329	0,008	0,010	0,010	719,457	0,030	578,554	15,192	936,828	65,831	1,519	2,026	2,026	143 891,434	6,077
Welders																											
Generator Sets																											
Paving - Asphalt (1 ac)																											
Pavers	0,671	0,007	0,265	0,031	0,001	0,001	0,001	68,408	0,003	4,699	0,051	1,854	0,219	0,005	0,007	0,007	478,853	0,023	46,992	0,506	18,537	2,191	0,051	0,067	0,067	4 788,530	0,228
Cement and Mortar Mixers	0,048	0,005	0,182	0,122	0,000	0,000	0,000	25,258	0,003	0,287	0,032	1,093	0,733	0,002	0,002	0,002	151,549	0,016	2,867	0,320	10,934	7,333	0,021	0,021	0,021	1 515,491	0,157
Rollers	0,438	0,004	0,248	0,017	0,000	0,001	0,001	38,088	0,002	3,063	0,028	1,736	0,122	0,003	0,004	0,004	266,614	0,013	30,626	0,281	17,358	1,220	0,028	0,038	0,038	2 666,141	0,127
Tractors/Loaders/Backhoes	0,181	0,005	0,293	0,021	0,000	0,001	0,001	44,966	0,002	1,266	0,033	2,049	0,144	0,003	0,004	0,004	314,763	0,013	12,656	0,332	20,493	1,440	0,033	0,044	0,044	3 147,625	0,133
Paving Equipment																											
Paving - Concrete (1 ac)																											
Pavers	0,671	0,007	0,265	0,031	0,001	0,001	0,001	68,408	0,003	4,699	0,051	1,854	0,219	0,005	0,007	0,007	478,853	0,023	46,992	0,506	18,537	2,191	0,051	0,067	0,067	4 788,530	0,228
Cement and Mortar Mixers	0,048	0,005	0,182	0,122	0,000	0,000	0,000	25,258	0,003	0,287	0,032	1,093	0,733	0,002	0,002	0,002	151,549	0,016	2,867	0,320	10,934	7,333	0,021	0,021	0,021	1 515,491	0,157
Rollers	0,438	0,004	0,248	0,017	0,000	0,001	0,001	38,088	0,002	3,063	0,028	1,736	0,122	0,003	0,004	0,004	266,614	0,013	30,626	0,281	17,358	1,220	0,028	0,038	0,038	2 666,141	0,127
Tractors/Loaders/Backhoes	0,181	0,005	0,293	0,021	0,000	0,001	0,001	44,966	0,002	1,266	0,033	2,049	0,144	0,003	0,004	0,004	314,763	0,013	12,656	0,332	20,493	1,440	0,033	0,044	0,044	3 147,625	0,133
Paving Equipment																											
Site Preparation - Pond (0 ac)																											
Graders																											
Tractors/Loaders/Backhoes																											
Rubber Tired Dozers																											
Scrapers																											
Excavation (0 cy)																											
Scrapers																											
Rubber Tired Dozers																											
Off-Highway Trucks																											
Other General Industrial Equipt																											

Total per Phase																											
Site Preparation	0,707	0,015	0,665	0,065	0,001	0,002	0,002	141,025	0,005	5,657	0,119	5,317	0,516	0,012	0,016	0,016	1 128,199	0,041	11,314	0,238	10,634	1,032	0,024	0,032	0,032	2 256,397	0,082
Grading	0,991	0,030	1,547	0,132	0,003	0,004	0,004	287,800	0,013	4,830	0,133	7,851	0,575	0,013	0,018	0,018	1 256,043	0,049	19,320	0,530	31,404	2,299	0,053	0,071	0,071	5 024,173	0,197
Building Construction	0,896	0,023	1,201	0,100	0,002	0,003	0,003	218,466	0,009	5,264	0,140	7,726	0,605	0,014	0,019	0,019	1 322,797	0,054	1 052,899	27,932	1 545,230	121,037	2,793	3,724	3,724	264 559,377	10,794
Paving - Asphalt	1,337	0,021	0,988	0,192	0,002	0,002	0,002	176,720	0,010	9,314	0,144	6,732	1,218	0,013	0,017	0,017	1 211,779	0,064	93,141	1,439	67,322	12,184	0,133	0,171	0,171	12 117,787	0,644
Paving - Concrete	1,337	0,021	0,988	0,192	0,002	0,002	0,002	176,720	0,010	9,314	0,144	6,732	1,218	0,013	0,017	0,017	1 211,779	0,064	93,141	1,439	67,322	12,184	0,133	0,171	0,171	12 117,787	0,644
Site Preparation - Pond	0,000	0,000	0,000	0,000	0,000	0,000	0,000	0,000	0,000	0,000	0,000	0,000	0,000	0,000	0,000	0,000	0,000	0,000	0,000	0,000	0,000	0,000	0,000	0,000	0,000	0,000	0,000
Excavation	0,000	0,000	0,000	0,000	0,000	0,000	0,000	0,000	0,000	0,000	0,000	0,000	0,000	0,000	0,000	0,000	0,000	0,000	0,000	0,000	0,000	0,000	0,000	0,000	0,000	0,000	0,000
Total																			**1 269,814**	**31,579**	**1 721,912**	**148,736**	**3,137**	**4,168**	**4,168**	**296 075,520**	**12,361**

WPWMA EIR
Construction Emissions - Proposed Project Exhaust Emissions
Plan Concept 2

Recovered Materials Storage

Construction Period:	01.01.2032	to	
Number of workers:		Duration (weeks):	

Off Road Equipment Type	Area Size	Number (ea)	Daily Hours	Annual Days Equipment Used
Demolition				
Scraper - CAT 657				
Water Truck - 4000 gal, 3 axle, 58000 gvw				
Site Preparation (2 ac)	***2 ac***	***3***	***23***	***3***
Graders	2	1	8	3
Tractors/Loaders/Backhoes	2	1	8	3
Rubber Tired Dozers	2	1	7	3
Scrapers	2	0	0	0
Grading (2 ac)	***2 ac***	***3***	***19***	***6***
Rubber Tired Dozers	2	1	6	6
Concrete/Industrial Saws	2	0	0	0
Tractors/Loaders/Backhoes	2	1	7	6
Graders	2	1	6	6
Excavators	2	0	0	0
Scrapers	2	0	0	0
Building Construction (2 ac)	***2 ac***	***7***	***50***	***220***
Cranes	2	1	6	220
Forklifts	2	1	6	220
Tractors/Loaders/Backhoes	2	1	6	220
Welders	2	3	8	220
Generator Sets	2	1	8	220
Paving - Asphalt (1 ac)	***1 ac***	***7***	***45***	***10***
Pavers	1	1	7	10
Cement and Mortar Mixers	1	4	6	10
Rollers	1	1	7	10
Tractors/Loaders/Backhoes	1	1	7	10
Paving Equipment	1	0	0	0
Paving - Concrete (2 ac)	***2 ac***	***5***	***35***	***10***
Pavers	2	1	6	10
Cement and Mortar Mixers	2	1	6	10
Rollers	2	1	7	10
Tractors/Loaders/Backhoes	2	1	8	10
Paving Equipment	2	1	8	10
Site Preparation - Pond (0 ac)	***0 ac***	***0***	***0***	***0***
Graders	0	0	0	0
Tractors/Loaders/Backhoes	0	0	0	0
Rubber Tired Dozers	0	0	0	0
Scrapers	0	0	0	0
Excavation (0 cy)	***0 cy***	***0***	***0***	***0***
Scrapers	0	0	0	0
Rubber Tired Dozers	0	0	0	0
Off-Highway Trucks	0	0	0	0
Other General Industrial Equipment	0	0	0	0

Area Size Reference Table	Size	Unit
Site Preparation	2	ac
Grading	2	ac
Building Construction	2	ac
Paving - Asphalt	1	ac
Paving - Concrete	2	ac
Site Preparation - Pond	0	ac
Excavation	0	cy

WPWMA EIR
Construction Emissions - Proposed Project Exhaust Emissions

Recovered Materials Storage

Emission Factors					Emissions Factor (g/bhp-hr)								
Equipment Type	**HorsePower**	**Load Factor**	**Construction Year**	**Year+Equipment Type+HorsePower**	**CO**	**NOX**	**PM10**	**PM2.5**	**ROG**	**TOG**	**SO2**	**CO2**	**CH4**
Demolition													
Site Preparation (2 ac)													
Graders	187	0,41	2032	2030Graders250	2,20E+00	2,60E-01	8,00E-03	8,00E-03	6,00E-02	3,11E+00	6,00E-03	5,68E+02	1,90E-02
Tractors/Loaders/Backhoes	97	0,37	2032	2030Tractors/Loaders/Backhoes120	3,70E+00	2,60E-01	8,00E-03	8,00E-03	6,00E-02	2,29E+00	6,00E-03	5,68E+02	2,40E-02
Rubber Tired Dozers	247	0,4	2032	2030Rubber Tired Dozers250	2,20E+00	2,60E-01	8,00E-03	8,00E-03	6,00E-02	1,56E+00	6,00E-03	5,68E+02	3,00E-02
Scrapers													
Grading (2 ac)													
Rubber Tired Dozers	247	0,4	2032	2030Rubber Tired Dozers250	2,20E+00	2,60E-01	8,00E-03	8,00E-03	6,00E-02	1,56E+00	6,00E-03	5,68E+02	3,00E-02
Concrete/Industrial Saws													
Tractors/Loaders/Backhoes	97	0,37	2032	2030Tractors/Loaders/Backhoes120	3,70E+00	2,60E-01	8,00E-03	8,00E-03	6,00E-02	2,29E+00	6,00E-03	5,68E+02	2,40E-02
Graders	187	0,41	2032	2030Graders250	2,20E+00	2,60E-01	8,00E-03	8,00E-03	6,00E-02	3,11E+00	6,00E-03	5,68E+02	1,90E-02
Excavators													
Scrapers													
Building Construction (2 ac)													
Cranes	231	0,29	2032	2030Cranes250	2,20E+00	2,60E-01	8,00E-03	8,00E-03	6,00E-02	2,84E+00	6,00E-03	5,68E+02	2,00E-02
Forklifts	89	0,2	2032	2030Forklifts120	3,70E+00	2,60E-01	8,00E-03	8,00E-03	6,00E-02	1,48E+00	6,00E-03	5,68E+02	2,50E-02
Tractors/Loaders/Backhoes	97	0,37	2032	2030Tractors/Loaders/Backhoes120	3,70E+00	2,60E-01	8,00E-03	8,00E-03	6,00E-02	2,29E+00	6,00E-03	5,68E+02	2,40E-02
Welders	46	0,45	2032	2030Welders50	4,10E+00	2,75E+00	8,00E-03	8,00E-03	1,20E-01	4,72E+00	7,00E-03	5,68E+02	4,00E-02
Generator Sets	84	0,74	2032	2030Generator Sets120	3,70E+00	2,60E-01	8,00E-03	8,00E-03	6,00E-02	3,62E+00	6,00E-03	5,68E+02	1,60E-02
Paving - Asphalt (1 ac)													
Pavers	130	0,42	2032	2030Pavers175	2,20E+00	2,60E-01	8,00E-03	8,00E-03	6,00E-02	5,58E+00	6,00E-03	5,68E+02	2,70E-02
Cement and Mortar Mixers	9	0,56	2032	2030Cement and Mortar Mixers15	4,10E+00	2,75E+00	8,00E-03	8,00E-03	1,20E-01	1,08E+00	8,00E-03	5,68E+02	5,90E-02
Rollers	80	0,38	2032	2030Rollers120	3,70E+00	2,60E-01	8,00E-03	8,00E-03	6,00E-02	6,53E+00	6,00E-03	5,68E+02	2,70E-02
Tractors/Loaders/Backhoes	97	0,37	2032	2030Tractors/Loaders/Backhoes120	3,70E+00	2,60E-01	8,00E-03	8,00E-03	6,00E-02	2,29E+00	6,00E-03	5,68E+02	2,40E-02
Paving Equipment													
Paving - Concrete (2 ac)													
Pavers	130	0,42	2032	2030Pavers175	2,20E+00	2,60E-01	8,00E-03	8,00E-03	6,00E-02	5,58E+00	6,00E-03	5,68E+02	2,70E-02
Cement and Mortar Mixers	9	0,56	2032	2030Cement and Mortar Mixers15	4,10E+00	2,75E+00	8,00E-03	8,00E-03	1,20E-01	1,08E+00	8,00E-03	5,68E+02	5,90E-02
Rollers	80	0,38	2032	2030Rollers120	3,70E+00	2,60E-01	8,00E-03	8,00E-03	6,00E-02	6,53E+00	6,00E-03	5,68E+02	2,70E-02
Tractors/Loaders/Backhoes	97	0,37	2032	2030Tractors/Loaders/Backhoes120	3,70E+00	2,60E-01	8,00E-03	8,00E-03	6,00E-02	2,29E+00	6,00E-03	5,68E+02	2,40E-02
Paving Equipment	132	0,36	2032	2030Paving Equipment175	2,20E+00	2,60E-01	8,00E-03	8,00E-03	6,00E-02	5,53E+00	6,00E-03	5,68E+02	2,60E-02
Site Preparation - Pond (0 ac)													
Graders													
Tractors/Loaders/Backhoes													
Rubber Tired Dozers													
Scrapers													
Excavation (0 cy)													
Scrapers													
Rubber Tired Dozers													
Off-Highway Trucks													
Other General Industrial Equipn													

WPWMA EIR
Construction Emissions - Proposed Project Exhaust Emissions

Recovered Materials Storage

	Hourly Emissions (lb/hr)									Daily Emissions (lb/day)									Annual Emissions (lb/yr)								
Equipment Type	**TOG**	**ROG**	**CO**	**NOX**	**SO2**	**PM10**	**PM2.5**	**CO2**	**CH4**	**TOG**	**ROG**	**CO**	**NOX**	**SO2**	**PM10**	**PM2.5**	**CO2**	**CH4**	**TOG**	**ROG**	**CO**	**NOX**	**SO2**	**PM10**	**PM2.5**	**CO2**	**CH4**
Demolition																											
Site Preparation (2 ac)																											
Graders	0,526	0,010	0,372	0,044	0,001	0,001	0,001	96,059	0,003	4,211	0,081	2,975	0,352	0,008	0,011	0,011	768,470	0,026	12,633	0,243	8,925	1,055	0,024	0,032	0,032	2 305,410	0,077
Tractors/Loaders/Backhoes	0,181	0,005	0,293	0,021	0,000	0,001	0,001	44,966	0,002	1,446	0,038	2,342	0,165	0,004	0,005	0,005	359,729	0,015	4,339	0,114	7,026	0,494	0,011	0,015	0,015	1 079,186	0,046
Rubber Tired Dozers	0,339	0,013	0,479	0,057	0,001	0,002	0,002	123,785	0,007	2,372	0,091	3,354	0,396	0,009	0,012	0,012	866,496	0,046	7,117	0,274	10,063	1,189	0,027	0,037	0,037	2 599,488	0,137
Scrapers																											
Grading (2 ac)																											
Rubber Tired Dozers	0,339	0,013	0,479	0,057	0,001	0,002	0,002	123,785	0,007	2,034	0,078	2,875	0,340	0,008	0,010	0,010	742,711	0,039	12,201	0,470	17,251	2,039	0,047	0,063	0,063	4 456,264	0,235
Concrete/Industrial Saws																											
Tractors/Loaders/Backhoes	0,181	0,005	0,293	0,021	0,000	0,001	0,001	44,966	0,002	1,266	0,033	2,049	0,144	0,003	0,004	0,004	314,763	0,013	7,594	0,199	12,296	0,864	0,020	0,027	0,027	1 888,575	0,080
Graders	0,526	0,010	0,372	0,044	0,001	0,001	0,001	96,059	0,003	3,158	0,061	2,231	0,264	0,006	0,008	0,008	576,353	0,019	18,949	0,365	13,387	1,582	0,037	0,049	0,049	3 458,115	0,116
Excavators																											
Scrapers																											
Building Construction (2 ac)																											
Cranes	0,419	0,009	0,325	0,038	0,001	0,001	0,001	83,931	0,003	2,512	0,053	1,949	0,230	0,005	0,007	0,007	503,585	0,018	552,677	11,697	428,885	50,686	1,170	1,560	1,560	110 788,687	3,899
Forklifts	0,058	0,002	0,145	0,010	0,000	0,000	0,000	22,301	0,001	0,348	0,014	0,871	0,061	0,001	0,002	0,002	133,808	0,006	76,664	3,108	191,659	13,468	0,311	0,414	0,414	29 437,806	1,295
Tractors/Loaders/Backhoes	0,181	0,005	0,293	0,021	0,000	0,001	0,001	44,966	0,002	1,085	0,028	1,757	0,123	0,003	0,004	0,004	269,796	0,011	238,654	6,267	386,441	27,155	0,627	0,836	0,836	59 355,217	2,507
Welders	0,646	0,016	0,561	0,376	0,001	0,001	0,001	77,804	0,005	5,169	0,131	4,491	3,012	0,008	0,009	0,009	622,434	0,044	1 137,074	28,915	987,922	662,631	1,687	1,928	1,928	136 935,412	9,638
Generator Sets	0,496	0,008	0,507	0,036	0,001	0,001	0,001	77,879	0,002	3,964	0,066	4,056	0,285	0,007	0,009	0,009	623,035	0,018	872,141	14,471	892,401	62,709	1,447	1,930	1,930	137 067,717	3,859
Paving - Asphalt (1 ac)																											
Pavers	0,671	0,007	0,265	0,031	0,001	0,001	0,001	68,408	0,003	4,699	0,051	1,854	0,219	0,005	0,007	0,007	478,853	0,023	46,992	0,506	18,537	2,191	0,051	0,067	0,067	4 788,530	0,228
Cement and Mortar Mixers	0,048	0,005	0,182	0,122	0,000	0,000	0,000	25,258	0,003	0,287	0,032	1,093	0,733	0,002	0,002	0,002	151,549	0,016	2,867	0,320	10,934	7,333	0,021	0,021	0,021	1 515,491	0,157
Rollers	0,438	0,004	0,248	0,017	0,000	0,001	0,001	38,088	0,002	3,063	0,028	1,736	0,122	0,003	0,004	0,004	266,614	0,013	30,626	0,281	17,358	1,220	0,028	0,038	0,038	2 666,141	0,127
Tractors/Loaders/Backhoes	0,181	0,005	0,293	0,021	0,000	0,001	0,001	44,966	0,002	1,266	0,033	2,049	0,144	0,003	0,004	0,004	314,763	0,013	12,656	0,332	20,493	1,440	0,033	0,044	0,044	3 147,625	0,133
Paving Equipment																											
Paving - Concrete (2 ac)																											
Pavers	0,671	0,007	0,265	0,031	0,001	0,001	0,001	68,408	0,003	4,028	0,043	1,589	0,188	0,004	0,006	0,006	410,445	0,020	40,279	0,433	15,889	1,878	0,043	0,058	0,058	4 104,454	0,195
Cement and Mortar Mixers	0,012	0,001	0,046	0,031	0,000	0,000	0,000	6,315	0,001	0,072	0,008	0,273	0,183	0,001	0,001	0,001	37,887	0,004	0,717	0,080	2,733	1,833	0,005	0,005	0,005	378,873	0,039
Rollers	0,438	0,004	0,248	0,017	0,000	0,001	0,001	38,088	0,002	3,063	0,028	1,736	0,122	0,003	0,004	0,004	266,614	0,013	30,626	0,281	17,358	1,220	0,028	0,038	0,038	2 666,141	0,127
Tractors/Loaders/Backhoes	0,181	0,005	0,293	0,021	0,000	0,001	0,001	44,966	0,002	1,446	0,038	2,342	0,165	0,004	0,005	0,005	359,729	0,015	14,464	0,380	23,421	1,646	0,038	0,051	0,051	3 597,286	0,152
Paving Equipment	0,579	0,006	0,230	0,027	0,001	0,001	0,001	59,537	0,003	4,631	0,050	1,844	0,218	0,005	0,007	0,007	476,297	0,022	46,306	0,503	18,438	2,179	0,050	0,067	0,067	4 762,971	0,218
Site Preparation - Pond (0 ac)																											
Graders																											
Tractors/Loaders/Backhoes																											
Rubber Tired Dozers																											
Scrapers																											
Excavation (0 cy)																											
Scrapers																											
Rubber Tired Dozers																											
Off-Highway Trucks																											
Other General Industrial Equipt																											

Total per Phase																											
Site Preparation	1,046	0,028	1,144	0,121	0,003	0,004	0,004	264,810	0,012	8,030	0,211	8,671	0,913	0,021	0,028	0,028	1 994,695	0,087	24,089	0,632	26,014	2,738	0,063	0,084	0,084	5 984,084	0,260
Grading	1,046	0,028	1,144	0,121	0,003	0,004	0,004	264,810	0,012	6,457	0,172	7,156	0,747	0,017	0,023	0,023	1 633,826	0,072	38,744	1,035	42,934	4,485	0,103	0,138	0,138	9 802,955	0,431
Building Construction	1,799	0,041	1,831	0,481	0,003	0,004	0,004	306,882	0,014	13,078	0,293	13,124	3,712	0,024	0,030	0,030	2 152,658	0,096	2 877,210	64,458	2 887,309	816,650	5,241	6,667	6,667	473 584,839	21,198
Paving - Asphalt	1,337	0,021	0,988	0,192	0,002	0,002	0,002	176,720	0,010	9,314	0,144	6,732	1,218	0,013	0,017	0,017	1 211,779	0,064	93,141	1,439	67,322	12,184	0,133	0,171	0,171	12 117,787	0,644
Paving - Concrete	1,880	0,024	1,082	0,127	0,002	0,003	0,003	217,313	0,010	13,239	0,168	7,784	0,876	0,017	0,022	0,022	1 550,972	0,073	132,391	1,677	77,840	8,756	0,165	0,218	0,218	15 509,725	0,731
Site Preparation - Pond	0,000	0,000	0,000	0,000	0,000	0,000	0,000	0,000	0,000	0,000	0,000	0,000	0,000	0,000	0,000	0,000	0,000	0,000	0,000	0,000	0,000	0,000	0,000	0,000	0,000	0,000	0,000
Excavation	0,000	0,000	0,000	0,000	0,000	0,000	0,000	0,000	0,000	0,000	0,000	0,000	0,000	0,000	0,000	0,000	0,000	0,000	0,000	0,000	0,000	0,000	0,000	0,000	0,000	0,000	0,000
Total																			**3 165,574**	**69,241**	**3 101,420**	**844,812**	**5,706**	**7,278**	**7,278**	**516 999,388**	**23,264**

WPWMA EIR
Construction Emissions - Proposed Project Exhaust Emissions
Plan Concept 2

Shared Site Utilities

Construction Period:	01.01.2032	to	
Number of workers:		Duration (weeks):	

Off Road Equipment Type	Area Size	Number (ea)	Daily Hours	Annual Days Equipment Used
Demolition				
Scraper - CAT 657				
Water Truck - 4000 gal, 3 axle, 58000 gvw				
Site Preparation (1 ac)	***1 ac***	***2***	***16***	***2***
Graders	1	1	8	2
Tractors/Loaders/Backhoes	1	1	8	2
Rubber Tired Dozers	1	0	0	0
Scrapers	1	0	0	0
Grading (1 ac)	***1 ac***	***4***	***21***	***4***
Rubber Tired Dozers	1	1	1	4
Concrete/Industrial Saws	1	1	8	4
Tractors/Loaders/Backhoes	1	2	6	4
Graders	1	0	0	0
Excavators	1	0	0	0
Scrapers	1	0	0	0
Building Construction (0 ac)	***0 ac***	***0***	***0***	***0***
Cranes	0	0	0	0
Forklifts	0	0	0	0
Tractors/Loaders/Backhoes	0	0	0	0
Welders	0	0	0	0
Generator Sets	0	0	0	0
Paving - Asphalt (0 ac)	***0 ac***	***0***	***0***	***0***
Pavers	0	0	0	0
Cement and Mortar Mixers	0	0	0	0
Rollers	0	0	0	0
Tractors/Loaders/Backhoes	0	0	0	0
Paving Equipment	0	0	0	0
Paving - Concrete (0 ac)	***0 ac***	***0***	***0***	***0***
Pavers	0	0	0	0
Cement and Mortar Mixers	0	0	0	0
Rollers	0	0	0	0
Tractors/Loaders/Backhoes	0	0	0	0
Paving Equipment	0	0	0	0
Site Preparation - Pond (0 ac)	***0 ac***	***0***	***0***	***0***
Graders	0	0	0	0
Tractors/Loaders/Backhoes	0	0	0	0
Rubber Tired Dozers	0	0	0	0
Scrapers	0	0	0	0
Excavation (7851.85185185185 cy)	***7852 cy***	***4***	***26***	***1***
Scrapers	7852	1	8	1
Rubber Tired Dozers	7852	1	8	1
Off-Highway Trucks	7852	1	8	1
Other General Industrial Equipment	7852	1	2	1

Area Size Reference Table	Size	Unit
Site Preparation	1	ac
Grading	1	ac
Building Construction	0	ac
Paving - Asphalt	0	ac
Paving - Concrete	0	ac
Site Preparation - Pond	0	ac
Excavation	7 852	cy

WPWMA EIR
Construction Emissions - Proposed Project Exhaust Emissions

Shared Site Utilities

Emission Factors					Emissions Factor (g/bhp-hr)								
Equipment Type	**HorsePower**	**Load Factor**	**Construction Year**	**Year+Equipment Type+HorsePower**	**CO**	**NOX**	**PM10**	**PM2.5**	**ROG**	**TOG**	**SO2**	**CO2**	**CH4**
Demolition													
Site Preparation (1 ac)													
Graders	187	0,41	2032	2030Graders250	2,20E+00	2,60E-01	8,00E-03	8,00E-03	6,00E-02	3,11E+00	6,00E-03	5,68E+02	1,90E-02
Tractors/Loaders/Backhoes	97	0,37	2032	2030Tractors/Loaders/Backhoes120	3,70E+00	2,60E-01	8,00E-03	8,00E-03	6,00E-02	2,29E+00	6,00E-03	5,68E+02	2,40E-02
Rubber Tired Dozers													
Scrapers													
Grading (1 ac)													
Rubber Tired Dozers	247	0,4	2032	2030Rubber Tired Dozers250	2,20E+00	2,60E-01	8,00E-03	8,00E-03	6,00E-02	1,56E+00	6,00E-03	5,68E+02	3,00E-02
Concrete/Industrial Saws	81	0,73	2032	2030Concrete/Industrial Saws120	3,70E+00	2,60E-01	8,00E-03	8,00E-03	6,00E-02	2,23E+00	6,00E-03	5,68E+02	1,90E-02
Tractors/Loaders/Backhoes	97	0,37	2032	2030Tractors/Loaders/Backhoes120	3,70E+00	2,60E-01	8,00E-03	8,00E-03	6,00E-02	2,29E+00	6,00E-03	5,68E+02	2,40E-02
Graders													
Excavators													
Scrapers													
Building Construction (0 ac)													
Cranes													
Forklifts													
Tractors/Loaders/Backhoes													
Welders													
Generator Sets													
Paving - Asphalt (0 ac)													
Pavers													
Cement and Mortar Mixers													
Rollers													
Tractors/Loaders/Backhoes													
Paving Equipment													
Paving - Concrete (0 ac)													
Pavers													
Cement and Mortar Mixers													
Rollers													
Tractors/Loaders/Backhoes													
Paving Equipment													
Site Preparation - Pond (0 ac)													
Graders													
Tractors/Loaders/Backhoes													
Rubber Tired Dozers													
Scrapers													
Excavation (7851.85185185185 cy)													
Scrapers	367	0,48	2032	2030Scrapers500	2,20E+00	2,60E-01	8,00E-03	8,00E-03	6,00E-02	2,70E+00	5,00E-03	5,68E+02	2,30E-02
Rubber Tired Dozers	247	0,4	2032	2030Rubber Tired Dozers250	2,20E+00	2,60E-01	8,00E-03	8,00E-03	6,00E-02	1,56E+00	6,00E-03	5,68E+02	3,00E-02
Off-Highway Trucks	402	0,38	2032	2030Off-Highway Trucks500	2,20E+00	2,60E-01	8,00E-03	8,00E-03	6,00E-02	1,52E+00	5,00E-03	5,68E+02	1,90E-02
Other General Industrial Equipn	88	0,34	2032	2030Other General Industrial Equipment1	3,70E+00	2,60E-01	8,00E-03	8,00E-03	6,00E-02	7,09E+00	6,00E-03	5,68E+02	2,70E-02

WPWMA EIR
Construction Emissions - Proposed Project Exhaust Emissions

Shared Site Utilities

	Hourly Emissions (lb/hr)									Daily Emissions (lb/day)									Annual Emissions (lb/yr)								
Equipment Type	**TOG**	**ROG**	**CO**	**NOX**	**SO2**	**PM10**	**PM2.5**	**CO2**	**CH4**	**TOG**	**ROG**	**CO**	**NOX**	**SO2**	**PM10**	**PM2.5**	**CO2**	**CH4**	**TOG**	**ROG**	**CO**	**NOX**	**SO2**	**PM10**	**PM2.5**	**CO2**	**CH4**
Demolition																											
Site Preparation (1 ac)																											
Graders	0,526	0,010	0,372	0,044	0,001	0,001	0,001	96,059	0,003	4,211	0,081	2,975	0,352	0,008	0,011	0,011	768,470	0,026	8,422	0,162	5,950	0,703	0,016	0,022	0,022	1 536,940	0,051
Tractors/Loaders/Backhoes	0,181	0,005	0,293	0,021	0,000	0,001	0,001	44,966	0,002	1,446	0,038	2,342	0,165	0,004	0,005	0,005	359,729	0,015	2,893	0,076	4,684	0,329	0,008	0,010	0,010	719,457	0,030
Rubber Tired Dozers																											
Scrapers																											
Grading (1 ac)																											
Rubber Tired Dozers	0,339	0,013	0,479	0,057	0,001	0,002	0,002	123,785	0,007	0,339	0,013	0,479	0,057	0,001	0,002	0,002	123,785	0,007	1,356	0,052	1,917	0,227	0,005	0,007	0,007	495,140	0,026
Concrete/Industrial Saws	0,290	0,008	0,482	0,034	0,001	0,001	0,001	74,083	0,002	2,321	0,063	3,859	0,271	0,006	0,008	0,008	592,665	0,020	9,286	0,250	15,435	1,085	0,025	0,033	0,033	2 370,660	0,079
Tractors/Loaders/Backhoes	0,362	0,009	0,586	0,041	0,001	0,001	0,001	89,932	0,004	2,170	0,057	3,513	0,247	0,006	0,008	0,008	539,593	0,023	8,678	0,228	14,052	0,987	0,023	0,030	0,030	2 158,372	0,091
Graders																											
Excavators																											
Scrapers																											
Building Construction (0 ac)																											
Cranes																											
Forklifts																											
Tractors/Loaders/Backhoes																											
Welders																											
Generator Sets																											
Paving - Asphalt (0 ac)																											
Pavers																											
Cement and Mortar Mixers																											
Rollers																											
Tractors/Loaders/Backhoes																											
Paving Equipment																											
Paving - Concrete (0 ac)																											
Pavers																											
Cement and Mortar Mixers																											
Rollers																											
Tractors/Loaders/Backhoes																											
Paving Equipment																											
Site Preparation - Pond (0 ac)																											
Graders																											
Tractors/Loaders/Backhoes																											
Rubber Tired Dozers																											
Scrapers																											
Excavation (7851.85185185185 cy)																											
Scrapers	1,047	0,023	0,854	0,101	0,002	0,003	0,003	220,708	0,009	8,379	0,186	6,835	0,808	0,016	0,025	0,025	1 765,667	0,071	8,379	0,186	6,835	0,808	0,016	0,025	0,025	1 765,667	0,071
Rubber Tired Dozers	0,339	0,013	0,479	0,057	0,001	0,002	0,002	123,785	0,007	2,711	0,105	3,834	0,453	0,010	0,014	0,014	990,281	0,052	2,711	0,105	3,834	0,453	0,010	0,014	0,014	990,281	0,052
Off-Highway Trucks	0,512	0,020	0,741	0,088	0,002	0,003	0,003	191,391	0,006	4,095	0,162	5,927	0,700	0,013	0,022	0,022	1 531,127	0,051	4,095	0,162	5,927	0,700	0,013	0,022	0,022	1 531,127	0,051
Other General Industrial Equip	0,468	0,004	0,244	0,017	0,000	0,001	0,001	37,486	0,002	0,935	0,008	0,488	0,034	0,001	0,001	0,001	74,973	0,004	0,935	0,008	0,488	0,034	0,001	0,001	0,001	74,973	0,004

Total per Phase																											
Site Preparation	0,707	0,015	0,665	0,065	0,001	0,002	0,002	141,025	0,005	5,657	0,119	5,317	0,516	0,012	0,016	0,016	1 128,199	0,041	11,314	0,238	10,634	1,032	0,024	0,032	0,032	2 256,397	0,082
Grading	0,991	0,030	1,547	0,132	0,003	0,004	0,004	287,800	0,013	4,830	0,133	7,851	0,575	0,013	0,018	0,018	1 256,043	0,049	19,320	0,530	31,404	2,299	0,053	0,071	0,071	5 024,173	0,197
Building Construction	0,000	0,000	0,000	0,000	0,000	0,000	0,000	0,000	0,000	0,000	0,000	0,000	0,000	0,000	0,000	0,000	0,000	0,000	0,000	0,000	0,000	0,000	0,000	0,000	0,000	0,000	0,000
Paving - Asphalt	0,000	0,000	0,000	0,000	0,000	0,000	0,000	0,000	0,000	0,000	0,000	0,000	0,000	0,000	0,000	0,000	0,000	0,000	0,000	0,000	0,000	0,000	0,000	0,000	0,000	0,000	0,000
Paving - Concrete	0,000	0,000	0,000	0,000	0,000	0,000	0,000	0,000	0,000	0,000	0,000	0,000	0,000	0,000	0,000	0,000	0,000	0,000	0,000	0,000	0,000	0,000	0,000	0,000	0,000	0,000	0,000
Site Preparation - Pond	0,000	0,000	0,000	0,000	0,000	0,000	0,000	0,000	0,000	0,000	0,000	0,000	0,000	0,000	0,000	0,000	0,000	0,000	0,000	0,000	0,000	0,000	0,000	0,000	0,000	0,000	0,000
Excavation	2,366	0,061	2,319	0,262	0,005	0,008	0,008	573,371	0,024	16,121	0,461	17,084	1,996	0,040	0,061	0,061	4 362,047	0,178	16,121	0,461	17,084	1,996	0,040	0,061	0,061	4 362,047	0,178
Total																			**46,756**	**1,229**	**59,122**	**5,327**	**0,117**	**0,164**	**0,164**	**11 642,617**	**0,457**

WPWMA EIR

Construction Emissions - Proposed Project Exhaust Emissions

		Maximum Daily Emissions (lb/day) - across all construction phases								
Element	**Year**	**TOG**	**ROG**	**CO**	**NOX**	**SO2**	**PM10**	**PM2.5**	**CO2**	**CH4**
Main Entrance	2024	3,513	0,211	8,671	1,218	0,018	0,028	0,028	1 665,884	0,538
New SW Ponds	2024	3,167	0,466	20,869	2,017	0,039	0,062	0,062	3 688,013	1,190
Unlined Area Excavation (1 of 3)	2024	6,816	1,341	50,768	5,813	0,112	0,179	0,179	10 587,101	3,425
Stockpile Relocation	2024	4,523	0,932	34,176	4,039	0,078	0,124	0,124	7 345,497	2,377
Public Area	2026	12,809	0,762	29,822	3,712	0,063	0,102	0,102	6 008,286	1,943
Public Area - SW Pond	2026	1,202	0,211	8,671	0,913	0,018	0,028	0,028	1 665,887	0,538
Unlined Area Excavation (3 of 3)	2026	6,201	1,341	50,768	5,813	0,112	0,179	0,179	10 581,904	3,425
Landfill Construction	2031	9,301	2,012	76,152	8,719	0,168	0,268	0,268	15 872,857	5,137
Landfill Lining & Partial Closure	2032	118,673	2,483	107,169	10,760	0,226	0,331	0,331	23 519,023	0,856
Admin Building	2032	9,314	0,144	7,851	1,218	0,014	0,019	0,019	1 322,797	0,064
Recovered Materials Storage	2032	13,239	0,293	13,124	3,712	0,024	0,030	0,030	2 152,658	0,096
Shared Site Utilities	2032	16,121	0,461	17,084	1,996	0,040	0,061	0,061	4 362,047	0,178

Note: Assumes element and associated stormwater pond are built concurrently (excavation is associated with pond construction), as opposed to sequentially.

	Maximum Daily Emissions (lb/day) - across all construction phases								
Year	**TOG**	**ROG**	**CO**	**NOX**	**SO2**	**PM10**	**PM2.5**	**CO2**	**CH4**
2024	18,019	2,950	114,484	13,088	0,246	0,393	0,393	23 286,495	7,529
2026	20,212	2,314	89,261	10,437	0,193	0,308	0,308	18 256,078	5,906
2031	9,301	2,012	76,152	8,719	0,168	0,268	0,268	15 872,857	5,137
2032	157,347	3,381	145,228	17,686	0,304	0,441	0,441	31 356,526	1,196

Total Annual GHG (lb/yr)							
Element	**Year**	**CO2**	**CH4**		**Year**	**CO2**	**CH4**
Main Entrance	2024	59 500,499	15,538		2024	3 307 577,953	########
New SW Ponds	2024	73 264,504	23,667		2026	2 054 678,031	590,437
Unlined Area Excavation (1 of 3)	2024	1 264 983,812	409,186		2031	2 994 889,564	969,230
Stockpile Relocation	2024	1 909 829,137	617,969		2032	4 997 253,148	188,288
Public Area	2026	785 288,393	179,638				
Public Area - SW Pond	2026	4 997,661	1,613				
Unlined Area Excavation (3 of 3)	2026	1 264 391,978	409,186				
Landfill Construction	2031	2 994 889,564	969,230				
Landfill Lining & Partial Closure	2032	4 172 535,622	152,206				
Admin Building	2032	296 075,520	12,361				
Recovered Materials Storage	2032	516 999,388	23,264				
Shared Site Utilities	2032	11 642,617	0,457				

WPWMA EIR
Construction Onroad Emissions
Plan Concept 1

= manual input

Worker Commute Vehicle Miles Traveled (VMT)

		Number of Equipment per Phase									
Element	**Year**	**Demolition**	**Site Preparation**	**Grading**	**Building Construction**	**Paving - Asphalt**	**Paving - Concrete**	**Site Preparation - Pond**	**Excavation**	**Lining and Partial Closure**	**Stockpile Movement**
Public Area	2024	0	7	8	7	8	5	N/A	N/A	N/A	N/A
Public Area - SW Pond	2024	N/A	N/A	N/A	N/A	N/A	N/A	3	4	N/A	N/A
Western Entrance	2024	0	3	3	0	5	7	0	0	N/A	N/A
Shared Site Utilities	2024	0	3	3	0	0	0	0	4	N/A	N/A
Compost Facility	2025	0	7	8	5	0	6	N/A	N/A	N/A	N/A
Compost Facility - SW Pond	2025	N/A	N/A	N/A	N/A	N/A	N/A	7	4	N/A	N/A
Landfill Construction[3]	2028	0	7	8	0	0	0	0	24	N/A	N/A
Landfill Lining & Partial Closure[4]	2029	0	0	0	0	0	0	0	4	44	N/A
Recovered Materials Storage	2029	0	3	3	7	7	5	0	0	N/A	N/A
HHW Storage	2029	0	2	4	5	0	0	0	0	N/A	N/A
Primary Maintenance Facility	2033	0	3	3	5	5	7	0	0	N/A	N/A
Stockpile Relocation	2033	0	0	0	0	0	0	0	0	N/A	5

1,25 = Number of Construction Workers per Construction Equipment

21,6 = Placer County APCD Urban Roundtrip H-W Distance (miles)

Worker Commute Vehicle Miles Traveled (VMT)

		Number of Construction Workers (also equivalent to Worker Commute Roundtrips) per Day[1]										Construction Worker Commute Vehicle Miles Traveled (VMT) per Day[2]									
Element	**Year**	**Demolition**	**Site Preparation**	**Grading**	**Building Construction[1]**	**Paving - Asphalt**	**Paving - Concrete**	**Site Preparation - Pond**	**Excavation**	**Lining and Partial Closure**	**Stockpile Movement**	**Demolition**	**Site Preparation**	**Grading**	**Building Construction**	**Paving - Asphalt**	**Paving - Concrete**	**Site Preparation - Pond**	**Excavation**	**Lining and Partial Closure**	**Stockpile Movement**
Public Area	2024	0	9	10	23	10	6	0	0	0	0	0	194	216	497	216	130	0	0	0	0
Public Area - SW Pond	2024	0	0	0	0	0	0	4	5	0	0	0	0	0	0	0	0	86	108	0	0
Western Entrance	2024	0	4	4	0	6	9	0	0	0	0	0	86	86	0	130	194	0	0	0	0
Shared Site Utilities	2024	0	4	4	0	0	0	0	5	0	0	0	86	86	0	0	0	0	108	0	0
Compost Facility	2025	0	9	10	17	0	8	0	0	0	0	0	194	216	367	0	173	0	0	0	0
Compost Facility - SW Pond	2025	0	0	0	0	0	0	9	5	0	0	0	0	0	0	0	0	194	108	0	0
Landfill Construction[3]	2028	0	9	10	0	0	0	0	20	0	0	0	194	216	0	0	0	0	432	0	0
Landfill Lining & Partial Closure[4]	2029	0	0	0	0	0	0	0	5	35	0	0	0	0	0	0	0	0	108	756	0
Recovered Materials Storage	2029	0	4	4	29	9	6	0	0	0	0	0	86	86	626	194	130	0	0	0	0
HHW Storage	2029	0	3	5	2	0	0	0	0	0	0	0	65	108	43	0	0	0	0	0	0
Primary Maintenance Facility	2033	0	4	4	5	6	9	0	0	0	0	0	86	86	108	130	194	0	0	0	0
Stockpile Relocation	2033	0	0	0	0	0	0	0	0	0	6	0	0	0	0	0	0	0	0	0	130

Notes:
[1] Number of Construction Workers is based on CalEEMod Appendix A assumption of 1.25 workers per equipment and 1 roundtrip per worker per day. Except for Building Construction, which is based on CalEEMod Appendix A assumption of 0.42 Daily Worker Trip Rate per 1,000 sq ft of building.
[2] VMT per day based on CalEEMod Appendix D urban roundtrip distance for Placer County APCD H-W (Home - Work).
[3] Landfill Construction Excavation construction workers based on information provided by WPWMA (20 workers per module).
[4] Landfill Lining & Partial Closure construction workers based on information provided by WPWMA (35 workers per lining/partial closure event).

Vendor/Material Hauling Vehicle Miles Traveled (VMT)

		Imported Material (cy)										Duration of Construction Phase (days)									
Element	**Year**	**Demolition**	**Site Preparation**	**Grading**	**Building Construction**	**Paving - Asphalt**	**Paving - Concrete**	**Site Preparation - Pond**	**Excavation**	**Lining and Partial Closure**	**Stockpile Movement**	**Demolition**	**Site Preparation**	**Grading**	**Building Construction**	**Paving - Asphalt**	**Paving - Concrete**	**Site Preparation - Pond**	**Excavation**	**Lining and Partial Closure**	**Stockpile Movement**
Public Area	2024	N/A	0	0	see next table	9 883	1 503	N/A	N/A	N/A	N/A	0	10	30	220	20	10	N/A	N/A	N/A	N/A
Public Area - SW Pond	2024	N/A	N/A	N/A	see next table	N/A	N/A	0	0	N/A	N/A	N/A	N/A	N/A	N/A	N/A	N/A	3	1	N/A	N/A
Western Entrance	2024	N/A	0	0	see next table	1 500	250	0	0	N/A	N/A	0	3	6	0	10	10	0	0	N/A	N/A
Shared Site Utilities	2024	N/A	0	0	see next table	0	0	0	0	N/A	N/A	0	3	6	0	0	0	0	2	N/A	N/A
Compost Facility	2025	N/A	0	0	see next table	0	42 272	N/A	N/A	N/A	N/A	0	30	75	200	0	55	N/A	N/A	N/A	N/A
Compost Facility - SW Pond	2025	N/A	N/A	N/A	see next table	N/A	N/A	0	0	N/A	N/A	N/A	N/A	N/A	N/A	N/A	N/A	10	3	N/A	N/A
Landfill Construction3	2028	N/A	0	0	see next table	0	0	0	0	N/A	N/A	0	10	30	0	0	0	0	175	N/A	N/A
Landfill Lining & Partial Closure4	2029	N/A	0	0	see next table	0	0	0	0	N/A	N/A	0	0	0	0	0	0	0	13	175	N/A
Recovered Materials Storage	2029	N/A	0	0	see next table	163	1 944	0	0	N/A	N/A	0	3	6	220	10	10	0	0	N/A	N/A
HHW Storage	2029	N/A	0	0	see next table	0	0	0	0	N/A	N/A	0	2	4	200	0	0	0	0	N/A	N/A
Primary Maintenance Facility	2033	N/A	0	0	see next table	1 750	333	0	0	N/A	N/A	0	3	6	200	10	10	0	0	N/A	N/A
Stockpile Relocation	2033	N/A	0	0	see next table	0	0	0	0	N/A	N/A	0	0	0	0	0	0	0	0	N/A	260

16 = Load Capacity per Haul Truck (cy)

14,6 = Placer County APCD Urban Roundtrip C-C Distance (miles)

Vendor/Material Hauling Vehicle Miles Traveled (VMT)

		Number of Vendor/Haul Vehicle Roundtrips per Day[1]										Vendor/Haul Vehicle Miles Traveled (VMT) per Day[2]									
Element	**Year**	**Demolition**	**Site Preparation**	**Grading**	**Building Construction[3]**	**Paving - Asphalt**	**Paving - Concrete**	**Site Preparation - Pond**	**Excavation**	**Lining and Partial Closure**	**Stockpile Movement**	**Demolition**	**Site Preparation**	**Grading**	**Building Construction**	**Paving - Asphalt**	**Paving - Concrete**	**Site Preparation - Pond**	**Excavation**	**Lining and Partial Closure**	**Stockpile Movement**
Public Area	2024	0	0	0	9	31	9	0	0	0	0	0	0	0	129	453	131	0	0	0	0
Public Area - SW Pond	2024	0	0	0	0	0	0	0	0	0	0	0	0	0	0	0	0	0	0	0	0
Western Entrance	2024	0	0	0	0	9	2	0	0	0	0	0	0	0	0	131	29	0	0	0	0
Shared Site Utilities	2024	0	0	0	0	0	0	0	0	0	0	0	0	0	0	0	0	0	0	0	0
Compost Facility	2025	0	0	0	7	0	48	0	0	0	0	0	0	0	97	0	701	0	0	0	0
Compost Facility - SW Pond	2025	0	0	0	0	0	0	0	0	0	0	0	0	0	0	0	0	0	0	0	0
Landfill Construction3	2028	0	0	0	0	0	0	0	0	0	0	0	0	0	0	0	0	0	0	0	0
Landfill Lining & Partial Closure4	2029	0	0	0	0	0	0	0	0	0	0	0	0	0	0	0	0	0	0	0	0
Recovered Materials Storage	2029	0	0	0	11	1	12	0	0	0	0	0	0	0	168	15	175	0	0	0	0
HHW Storage	2029	0	0	0	1	0	0	0	0	0	0	0	0	0	12	0	0	0	0	0	0
Primary Maintenance Facility	2033	0	0	0	2	11	2	0	0	0	0	0	0	0	29	161	29	0	0	0	0
Stockpile Relocation	2033	0	0	0	0	0	0	0	0	0	0	0	0	0	0	0	0	0	0	0	0

Notes:
[1] Haul truck load capacity of 16 cy per CalEEMod Appendix A.
[2] VMT per day based on CalEEMod Appendix D urban roundtrip distance for Placer County APCD C-C (Commercial - Customer).
[3] Building Construction Number of Vendor/Haul Vehicle Roundtrips is based on CalEEMod Appendix A assumption of 0.1639 Daily Vendor Trip Rate per 1,000 sq ft of building.

WPWMA EIR
Construction Onroad Emissions
Plan Concept 1

Building Construction Workers & Vendor Trips

Element	Year	Building Size (sq ft)	Construction Worker Roundtrips per Day	Vendor Roundtrips per Day[2]
Public Area	2024	54 100	23	9
Public Area - SW Pond	2024		0	0
Western Entrance	2024		0	0
Shared Site Utilities	2024		0	0
Compost Facility	2025	40 600	17	7
Compost Facility - SW Pond	2025		0	0
Landfill Construction3	2028		0	0
Landfill Lining & Partial Closure4	2029		0	0
Recovered Materials Storage	2029	70 000	29	11
HHW Storage	2029	4 875	2	1
Primary Maintenance Facility	2033	12 000	5	2
Stockpile Relocation	2033		0	0

Note:
[1] Construction Worker Roundtrips based on CalEEMod Appendix A assumption of 0.42 daily worker trips per day per 1,000 sq ft of building.
[2] Vendor Roundtrips based on CalEEMod Appendix A assumption of 0.1639 vendor trips per day per 1,000 sq ft of building.

Worker Commute Vehicle Mix

Vehicle Type	Percent[1]
Light Duty Auto (LDA), Gasoline	50%
Light-Duty Truck Type 1 (LDT1), Gasoline	25%
Light-Duty Truck Type 2 (LDT2), Gasoline	25%

Note:
[1] Assumed worker commute vehicle mix per CalEEMod Appendix A.

Vendor/Haul Vehicle Mix

Vehicle Type	Percent[1]
Medium Heavy-Duty Truck (MHDT), Diesel	0%
Heavy Heavy-Duty Truck (HHDT), Diesel	100%

Note:
[1] Assumed vendor/haul vehicle mix per CalEEMod Appendix A.

Derivation of Paved Road Fugitive Emission Factors

Parameter	PM_{10}	$PM_{2.5}$
Average Weight [a]	2,4	2,4
k [b]	1	0,25
sL [a]	0,1	0,1
Emission Factor (g/mile) [c]	**0,300**	**0,075**

Notes:
[a] Average Weight and sL taken as the default value from CalEEMod.
[b] k taken from Table 13.2.1-1 of Section 13.2.1 of *AP-42* (USEPA, 2011).

[c] Emission factor calculated using Equation 1 from Section 13.2.1 of *AP-42* (USEPA, 2011), which is generally consistent with Section 5.3 of Appendix A of the *CalEEMod User's Guide* (Breeze Software, 2017):

$$\text{Emission Factor (g/mile)} = k \text{ (g/mile)} \times [sL \text{ (g/m}^2)]^{0.91} \times [\text{Average Weight (tons)}]^{1.02}$$

Derivation of Unpaved Road Fugitive Emission Factors

Parameter	PM_{10}	$PM_{2.5}$
Mean Vehicle Weight [a]	16,5	16,5
Silt Content [b]	8,5	8,5
k [c]	1,50	0,15
a [c]	0,9	0,9
b [c]	0,45	0,45
P [d]	74	74
Emission Factor (g/mile) [e]	**856,528**	**85,653**

Notes:
[a] Mean vehicle weight assumes that heavy- and light-duty trucks weigh an average of 16.5 tons.
[b] Silt content taken from Table 13.2.2-1 of Section 13.2.2 of *AP-42* (USEPA, 2006) for a Construction Site, Scraper Route; this value is consistent with the CalEEMod defaults.
[c] k, a, and b taken from Table 13.2.2-2 of Section 13.2.2 of *AP-42* (USEPA, 2006) for industrial roads.

[d] P (days of precipitation) taken as the CalEEMod default for the Placer-Sacramento County climate region. Taken from Table 1.1 of Appendix D of the *CalEEMod User's Guide* (Breeze Software, 2017).
[e] Emission factor calculated using Equations 1a and 2 from Section 13.2.2 of *AP-42* (USEPA, 2006):

$$\text{Emission Factor (g/mile)} = \{k \text{ (lbs/mile)} \times [\text{Silt Content (\%)} / 12]^{a} \times [\text{Mean Vehicle Weight (tons)} / 3]^{b}\} \times [(365\text{-}P) / 365] \times 453.6 \text{ (g/lb)}$$

WPWMA EIR
Construction Onroad Emissions
Plan Concept 1

Vehicle Exhaust Emission Factors

		Exhaust Emission Factors (g/mile) [a]													
Vehicle Class	**Calendar Year**	**TOG**	**ROG**	**CO**	**NO_x**	**SO_x**	**PM_{10}**	**$PM_{2.5}$**	**CO_2**	**CH_4**	**N_2O**	RUNEX PM10	PMBW PM10	PMTW PM10	RUNEX PM2.5	PMBW PM2.5	PMTW PM2.5
Light Duty Auto (LDA), Gasoline	2024	7,64E-03	5,23E-03	5,32E-01	2,58E-02	2,15E-03	4,58E-02	1,88E-02	2,14E+02	1,80E-03	3,78E-03	1,09E-03	3,68E-02	8,00E-03	1,00E-03	1,58E-02	2,00E-03
Light Duty Auto (LDA), Gasoline	2025	6,75E-03	4,62E-03	5,06E-01	2,36E-02	2,08E-03	4,58E-02	1,87E-02	2,08E+02	1,62E-03	3,59E-03	1,05E-03	3,68E-02	8,00E-03	9,69E-04	1,58E-02	2,00E-03
Light Duty Auto (LDA), Gasoline	2026	6,01E-03	4,12E-03	4,84E-01	2,19E-02	2,03E-03	4,58E-02	1,87E-02	2,02E+02	1,47E-03	3,43E-03	1,01E-03	3,68E-02	8,00E-03	9,28E-04	1,58E-02	2,00E-03
Light Duty Auto (LDA), Gasoline	2028	4,89E-03	3,35E-03	4,51E-01	1,95E-02	1,93E-03	4,56E-02	1,86E-02	1,93E+02	1,24E-03	3,21E-03	8,92E-04	3,68E-02	8,00E-03	8,20E-04	1,58E-02	2,00E-03
Light Duty Auto (LDA), Gasoline	2029	4,46E-03	3,06E-03	4,38E-01	1,86E-02	1,89E-03	4,56E-02	1,85E-02	1,89E+02	1,15E-03	3,13E-03	8,32E-04	3,68E-02	8,00E-03	7,65E-04	1,58E-02	2,00E-03
Light Duty Auto (LDA), Gasoline	2031	3,78E-03	2,59E-03	4,18E-01	1,74E-02	1,82E-03	4,55E-02	1,84E-02	1,82E+02	1,01E-03	3,03E-03	7,26E-04	3,68E-02	8,00E-03	6,68E-04	1,58E-02	2,00E-03
Light Duty Auto (LDA), Gasoline	2032	3,50E-03	2,40E-03	4,10E-01	1,69E-02	1,80E-03	4,54E-02	1,84E-02	1,79E+02	9,50E-04	2,99E-03	6,80E-04	3,68E-02	8,00E-03	6,25E-04	1,58E-02	2,00E-03
Light Duty Auto (LDA), Gasoline	2033	3,27E-03	2,24E-03	4,04E-01	1,66E-02	1,78E-03	4,54E-02	1,83E-02	1,77E+02	9,00E-04	2,96E-03	6,38E-04	3,68E-02	8,00E-03	5,87E-04	1,58E-02	2,00E-03
Light-Duty Truck Type 1 (LDT1), Gasoline	2024	1,35E-02	9,26E-03	6,94E-01	4,31E-02	2,51E-03	4,60E-02	1,89E-02	2,50E+02	2,77E-03	5,12E-03	1,27E-03	3,68E-02	8,00E-03	1,17E-03	1,58E-02	2,00E-03
Light-Duty Truck Type 1 (LDT1), Gasoline	2025	1,16E-02	7,95E-03	6,41E-01	3,80E-02	2,44E-03	4,60E-02	1,89E-02	2,43E+02	2,43E-03	4,72E-03	1,20E-03	3,68E-02	8,00E-03	1,11E-03	1,58E-02	2,00E-03
Light-Duty Truck Type 1 (LDT1), Gasoline	2026	1,00E-02	6,88E-03	5,97E-01	3,40E-02	2,38E-03	4,59E-02	1,88E-02	2,37E+02	2,16E-03	4,40E-03	1,14E-03	3,68E-02	8,00E-03	1,05E-03	1,58E-02	2,00E-03
Light-Duty Truck Type 1 (LDT1), Gasoline	2028	7,65E-03	5,24E-03	5,29E-01	2,79E-02	2,27E-03	4,57E-02	1,87E-02	2,26E+02	1,72E-03	3,91E-03	9,96E-04	3,68E-02	8,00E-03	9,16E-04	1,58E-02	2,00E-03
Light-Duty Truck Type 1 (LDT1), Gasoline	2029	6,71E-03	4,60E-03	5,02E-01	2,56E-02	2,22E-03	4,57E-02	1,86E-02	2,22E+02	1,55E-03	3,73E-03	9,27E-04	3,68E-02	8,00E-03	8,52E-04	1,58E-02	2,00E-03
Light-Duty Truck Type 1 (LDT1), Gasoline	2031	5,23E-03	3,58E-03	4,60E-01	2,18E-02	2,15E-03	4,56E-02	1,85E-02	2,14E+02	1,28E-03	3,44E-03	8,05E-04	3,68E-02	8,00E-03	7,40E-04	1,58E-02	2,00E-03
Light-Duty Truck Type 1 (LDT1), Gasoline	2032	4,67E-03	3,20E-03	4,44E-01	2,05E-02	2,11E-03	4,55E-02	1,84E-02	2,11E+02	1,17E-03	3,33E-03	7,53E-04	3,68E-02	8,00E-03	6,92E-04	1,58E-02	2,00E-03
Light-Duty Truck Type 1 (LDT1), Gasoline	2033	4,19E-03	2,87E-03	4,31E-01	1,94E-02	2,09E-03	4,55E-02	1,84E-02	2,08E+02	1,08E-03	3,25E-03	7,07E-04	3,68E-02	8,00E-03	6,50E-04	1,58E-02	2,00E-03
Light-Duty Truck Type 2 (LDT2), Gasoline	2024	1,06E-02	7,28E-03	6,35E-01	3,87E-02	2,68E-03	4,59E-02	1,88E-02	2,68E+02	2,44E-03	4,83E-03	1,10E-03	3,68E-02	8,00E-03	1,01E-03	1,58E-02	2,00E-03
Light-Duty Truck Type 2 (LDT2), Gasoline	2025	9,51E-03	6,52E-03	6,03E-01	3,46E-02	2,59E-03	4,58E-02	1,87E-02	2,59E+02	2,23E-03	4,49E-03	1,07E-03	3,68E-02	8,00E-03	9,85E-04	1,58E-02	2,00E-03
Light-Duty Truck Type 2 (LDT2), Gasoline	2026	8,56E-03	5,87E-03	5,77E-01	3,13E-02	2,51E-03	4,58E-02	1,87E-02	2,51E+02	2,04E-03	4,20E-03	1,03E-03	3,68E-02	8,00E-03	9,50E-04	1,58E-02	2,00E-03
Light-Duty Truck Type 2 (LDT2), Gasoline	2028	7,02E-03	4,81E-03	5,34E-01	2,62E-02	2,36E-03	4,57E-02	1,86E-02	2,36E+02	1,74E-03	3,76E-03	9,29E-04	3,68E-02	8,00E-03	8,54E-04	1,58E-02	2,00E-03
Light-Duty Truck Type 2 (LDT2), Gasoline	2029	6,39E-03	4,38E-03	5,17E-01	2,42E-02	2,30E-03	4,56E-02	1,86E-02	2,30E+02	1,61E-03	3,60E-03	8,74E-04	3,68E-02	8,00E-03	8,03E-04	1,58E-02	2,00E-03
Light-Duty Truck Type 2 (LDT2), Gasoline	2031	5,38E-03	3,69E-03	4,90E-01	2,12E-02	2,19E-03	4,55E-02	1,85E-02	2,19E+02	1,40E-03	3,34E-03	7,70E-04	3,68E-02	8,00E-03	7,08E-04	1,58E-02	2,00E-03
Light-Duty Truck Type 2 (LDT2), Gasoline	2032	4,97E-03	3,41E-03	4,80E-01	2,01E-02	2,15E-03	4,55E-02	1,84E-02	2,15E+02	1,32E-03	3,25E-03	7,23E-04	3,68E-02	8,00E-03	6,65E-04	1,58E-02	2,00E-03
Light-Duty Truck Type 2 (LDT2), Gasoline	2033	4,62E-03	3,16E-03	4,71E-01	1,92E-02	2,11E-03	4,54E-02	1,84E-02	2,11E+02	1,24E-03	3,17E-03	6,80E-04	3,68E-02	8,00E-03	6,25E-04	1,58E-02	2,00E-03
Medium Heavy-Duty Truck (MHDT), Diesel	2024	6,54E-03	5,75E-03	5,62E-02	8,30E-01	7,34E-03	1,47E-01	6,29E-02	7,69E+02	2,67E-04	1,23E-01	4,21E-03	1,30E-01	1,20E-02	4,03E-03	5,59E-02	3,00E-03
Medium Heavy-Duty Truck (MHDT), Diesel	2025	6,49E-03	5,70E-03	5,64E-02	8,31E-01	7,19E-03	1,47E-01	6,29E-02	7,54E+02	2,65E-04	1,21E-01	4,23E-03	1,30E-01	1,20E-02	4,05E-03	5,59E-02	3,00E-03
Medium Heavy-Duty Truck (MHDT), Diesel	2026	6,45E-03	5,66E-03	5,65E-02	8,32E-01	7,07E-03	1,47E-01	6,29E-02	7,41E+02	2,63E-04	1,19E-01	4,24E-03	1,30E-01	1,20E-02	4,06E-03	5,59E-02	3,00E-03
Medium Heavy-Duty Truck (MHDT), Diesel	2028	6,38E-03	5,61E-03	5,67E-02	8,34E-01	6,82E-03	1,47E-01	6,29E-02	7,15E+02	2,60E-04	1,14E-01	4,27E-03	1,30E-01	1,20E-02	4,09E-03	5,59E-02	3,00E-03
Medium Heavy-Duty Truck (MHDT), Diesel	2029	6,36E-03	5,59E-03	5,69E-02	8,36E-01	6,71E-03	1,47E-01	6,30E-02	7,04E+02	2,59E-04	1,13E-01	4,29E-03	1,30E-01	1,20E-02	4,11E-03	5,59E-02	3,00E-03
Medium Heavy-Duty Truck (MHDT), Diesel	2031	6,32E-03	5,56E-03	5,71E-02	8,41E-01	6,54E-03	1,47E-01	6,30E-02	6,86E+02	2,58E-04	1,10E-01	4,33E-03	1,30E-01	1,20E-02	4,14E-03	5,59E-02	3,00E-03
Medium Heavy-Duty Truck (MHDT), Diesel	2032	6,31E-03	5,54E-03	5,72E-02	8,43E-01	6,47E-03	1,47E-01	6,30E-02	6,78E+02	2,57E-04	1,08E-01	4,35E-03	1,30E-01	1,20E-02	4,16E-03	5,59E-02	3,00E-03
Medium Heavy-Duty Truck (MHDT), Diesel	2033	6,30E-03	5,54E-03	5,73E-02	8,45E-01	6,41E-03	1,47E-01	6,30E-02	6,72E+02	2,57E-04	1,07E-01	4,37E-03	1,30E-01	1,20E-02	4,18E-03	5,59E-02	3,00E-03
Heavy Heavy-Duty Truck (HHDT), Diesel	2024	1,70E-02	1,49E-02	1,54E-01	1,94E+00	1,14E-02	1,09E-01	4,62E-02	1,19E+03	6,92E-04	1,99E-01	1,13E-02	6,17E-02	3,60E-02	1,08E-02	2,65E-02	9,00E-03
Heavy Heavy-Duty Truck (HHDT), Diesel	2025	1,68E-02	1,48E-02	1,53E-01	1,90E+00	1,11E-02	1,09E-01	4,62E-02	1,16E+03	6,85E-04	1,95E-01	1,12E-02	6,17E-02	3,60E-02	1,07E-02	2,65E-02	9,00E-03
Heavy Heavy-Duty Truck (HHDT), Diesel	2026	1,66E-02	1,46E-02	1,53E-01	1,86E+00	1,08E-02	1,09E-01	4,60E-02	1,14E+03	6,78E-04	1,91E-01	1,11E-02	6,17E-02	3,60E-02	1,06E-02	2,65E-02	9,00E-03
Heavy Heavy-Duty Truck (HHDT), Diesel	2028	1,62E-02	1,42E-02	1,51E-01	1,79E+00	1,03E-02	1,09E-01	4,58E-02	1,08E+03	6,62E-04	1,82E-01	1,08E-02	6,17E-02	3,60E-02	1,03E-02	2,65E-02	9,00E-03
Heavy Heavy-Duty Truck (HHDT), Diesel	2029	1,60E-02	1,41E-02	1,50E-01	1,76E+00	1,01E-02	1,08E-01	4,56E-02	1,06E+03	6,53E-04	1,77E-01	1,06E-02	6,17E-02	3,60E-02	1,02E-02	2,65E-02	9,00E-03
Heavy Heavy-Duty Truck (HHDT), Diesel	2031	1,56E-02	1,37E-02	1,48E-01	1,70E+00	9,66E-03	1,08E-01	4,54E-02	1,01E+03	6,36E-04	1,69E-01	1,03E-02	6,17E-02	3,60E-02	9,90E-03	2,65E-02	9,00E-03
Heavy Heavy-Duty Truck (HHDT), Diesel	2032	1,54E-02	1,35E-02	1,48E-01	1,68E+00	9,50E-03	1,08E-01	4,53E-02	9,95E+02	6,29E-04	1,66E-01	1,02E-02	6,17E-02	3,60E-02	9,79E-03	2,65E-02	9,00E-03
Heavy Heavy-Duty Truck (HHDT), Diesel	2033	1,53E-02	1,34E-02	1,47E-01	1,66E+00	9,35E-03	1,08E-01	4,52E-02	9,80E+02	6,22E-04	1,63E-01	1,01E-02	6,17E-02	3,60E-02	9,70E-03	2,65E-02	9,00E-03

Notes:

[a] Exhaust Emission Factors in grams per mile (g/mile) were from EMFAC2017 for Placer County. A speed of 40 miles per hour (mph) was assumed for onroad vehicles, which is consistent with the CalEEMod default. An average temperature of 64 degrees Fahrenheit (°F) and humidity of 54% were used per Table B-1 of CT-EMFAC: A Computer Model to Estimate Transportation Project Emissions (UC-Davis, 2007).

On-Road Vehicle Emission Factors

				Exhaust Emission Factors (g/mile) [c]											Fugitive Emission Factors (g/mile) [d]	
Vehicle Type [a]	**Calendar Year**	**Frequency on Unpaved Road (%) [b]**	**Frequency on Paved Road (%) [b]**	**TOG**	**ROG**	**CO**	**NO_x**	**SO_x**	**PM_{10}**	**$PM_{2.5}$**	**CO_2**	**CH_4**	**N_2O**	**PM_{10}**	**$PM_{2.5}$**
Worker Commute	2024	10%	90%	0,010	0,007	0,598	0,033	0,002	0,046	0,019	236,7	0,002	0,004	85,9	8,6
Worker Commute	2025	10%	90%	0,009	0,006	0,564	0,030	0,002	0,046	0,019	229,5	0,002	0,004	85,9	8,6
Worker Commute	2026	10%	90%	0,008	0,005	0,535	0,027	0,002	0,046	0,019	223,0	0,002	0,004	85,9	8,6
Worker Commute	2028	10%	90%	0,006	0,004	0,491	0,023	0,002	0,046	0,019	211,9	0,001	0,004	85,9	8,6
Worker Commute	2029	10%	90%	0,006	0,004	0,474	0,022	0,002	0,046	0,019	207,2	0,001	0,003	85,9	8,6
Worker Commute	2031	10%	90%	0,005	0,003	0,447	0,019	0,002	0,046	0,018	199,4	0,001	0,003	85,9	8,6
Worker Commute	2032	10%	90%	0,004	0,003	0,436	0,019	0,002	0,045	0,018	196,2	0,001	0,003	85,9	8,6
Worker Commute	2033	10%	90%	0,004	0,003	0,427	0,018	0,002	0,045	0,018	193,4	0,001	0,003	85,9	8,6
Vendor/Material Hauling	2024	10%	90%	0,017	0,015	0,154	1,937	0,011	0,109	0,046	1190,1	0,001	0,199	85,9	8,6
Vendor/Material Hauling	2025	10%	90%	0,017	0,015	0,153	1,900	0,011	0,109	0,046	1163,4	0,001	0,195	85,9	8,6
Vendor/Material Hauling	2026	10%	90%	0,017	0,015	0,153	1,859	0,011	0,109	0,046	1136,5	0,001	0,191	85,9	8,6
Vendor/Material Hauling	2028	10%	90%	0,016	0,014	0,151	1,789	0,010	0,109	0,046	1081,6	0,001	0,182	85,9	8,6
Vendor/Material Hauling	2029	10%	90%	0,016	0,014	0,150	1,757	0,010	0,108	0,046	1056,5	0,001	0,177	85,9	8,6
Vendor/Material Hauling	2031	10%	90%	0,016	0,014	0,148	1,701	0,010	0,108	0,045	1013,0	0,001	0,169	85,9	8,6
Vendor/Material Hauling	2032	10%	90%	0,015	0,014	0,148	1,680	0,009	0,108	0,045	995,4	0,001	0,166	85,9	8,6
Vendor/Material Hauling	2033	10%	90%	0,015	0,013	0,147	1,661	0,009	0,108	0,045	980,2	0,001	0,163	85,9	8,6

Notes:

[a] Vehicle mixes are presented in the Worker Commute Vehicle Mix and Vendor/Haul Vehicle Mix tables.

[b] On-road vehicles are assumed to be on paved roads 10% of the time and on unpaved roads 90% of the time.

[c] Exhaust Emission Factors in grams per mile (g/mile) were from EMFAC2017 for Placer County. A speed of 40 miles per hour (mph) was assumed for onroad vehicles, which is consistent with the CalEEMod default. An average temperature of 64 degrees Fahrenheit (°F) and humidity of 54% were used per Table B-1 of *CT-EMFAC: A Computer Model to Estimate Transportation Project Emissions* (UC-Davis, 2007). See Vehicle Exhaust Emission Factors table for the emission factors.

[d] Fugitive Emission Factors in grams per mile (g/mile) were calculated using *AP-42* methodology, as detailed in the Derivation of Paved Road Fugitive Emission Factors and Derivation of Unpaved Road Fugitive Emission Factors tables.

WPWMA EIR
Construction Onroad Emissions
Plan Concept 1

On-Road Vehicle Emissions					Exhaust Emissions (lbs/day) [1]										Fugitive Emissions (lbs/day) [1]		Total Emissions (lbs/day)										Annual (lb/yr)
Element	Year	Phase	Vehicle Type	VMT Per Day	TOG	ROG	CO	NO_X	SO_X	PM_{10}	$PM_{2.5}$	CO_2	CH_4	N_2O	PM_{10}	$PM_{2.5}$	TOG	ROG	CO	NO_X	SO_X	PM_{10}	$PM_{2.5}$	CO_2	CH_4	N_2O	dpm
Public Area	2024	Demolition	Worker Commute	0	0.000	0.000	0.000	0.000	0.000	0.000	0.000	0.000	0.000	0.000	0.000	0.000	0.000	0.000	0.000	0.000	0.000	0.000	0.000	0.000	0.000	0.000	0.000
Public Area - SW Pond	2024	Demolition	Worker Commute	0	0.000	0.000	0.000	0.000	0.000	0.000	0.000	0.000	0.000	0.000	0.000	0.000	0.000	0.000	0.000	0.000	0.000	0.000	0.000	0.000	0.000	0.000	0.000
Western Entrance	2024	Demolition	Worker Commute	0	0.000	0.000	0.000	0.000	0.000	0.000	0.000	0.000	0.000	0.000	0.000	0.000	0.000	0.000	0.000	0.000	0.000	0.000	0.000	0.000	0.000	0.000	0.000
Shared Site Utilities	2024	Demolition	Worker Commute	0	0.000	0.000	0.000	0.000	0.000	0.000	0.000	0.000	0.000	0.000	0.000	0.000	0.000	0.000	0.000	0.000	0.000	0.000	0.000	0.000	0.000	0.000	0.000
Compost Facility	2025	Demolition	Worker Commute	0	0.000	0.000	0.000	0.000	0.000	0.000	0.000	0.000	0.000	0.000	0.000	0.000	0.000	0.000	0.000	0.000	0.000	0.000	0.000	0.000	0.000	0.000	0.000
Compost Facility - SW Pond	2025	Demolition	Worker Commute	0	0.000	0.000	0.000	0.000	0.000	0.000	0.000	0.000	0.000	0.000	0.000	0.000	0.000	0.000	0.000	0.000	0.000	0.000	0.000	0.000	0.000	0.000	0.000
Landfill Construction3	2028	Demolition	Worker Commute	0	0.000	0.000	0.000	0.000	0.000	0.000	0.000	0.000	0.000	0.000	0.000	0.000	0.000	0.000	0.000	0.000	0.000	0.000	0.000	0.000	0.000	0.000	0.000
Landfill Lining & Partial Closure4	2029	Demolition	Worker Commute	0	0.000	0.000	0.000	0.000	0.000	0.000	0.000	0.000	0.000	0.000	0.000	0.000	0.000	0.000	0.000	0.000	0.000	0.000	0.000	0.000	0.000	0.000	0.000
Recovered Materials Storage	2029	Demolition	Worker Commute	0	0.000	0.000	0.000	0.000	0.000	0.000	0.000	0.000	0.000	0.000	0.000	0.000	0.000	0.000	0.000	0.000	0.000	0.000	0.000	0.000	0.000	0.000	0.000
HHW Storage	2029	Demolition	Worker Commute	0	0.000	0.000	0.000	0.000	0.000	0.000	0.000	0.000	0.000	0.000	0.000	0.000	0.000	0.000	0.000	0.000	0.000	0.000	0.000	0.000	0.000	0.000	0.000
Primary Maintenance Facility	2033	Demolition	Worker Commute	0	0.000	0.000	0.000	0.000	0.000	0.000	0.000	0.000	0.000	0.000	0.000	0.000	0.000	0.000	0.000	0.000	0.000	0.000	0.000	0.000	0.000	0.000	0.000
Stockpile Relocation	2033	Demolition	Worker Commute	0	0.000	0.000	0.000	0.000	0.000	0.000	0.000	0.000	0.000	0.000	0.000	0.000	0.000	0.000	0.000	0.000	0.000	0.000	0.000	0.000	0.000	0.000	0.000
Public Area	2024	Site Preparation	Worker Commute	0	0.000	0.000	0.000	0.000	0.000	0.000	0.000	0.000	0.000	0.000	0.000	0.000	0.000	0.000	0.000	0.000	0.000	0.000	0.000	0.000	0.000	0.000	0.000
Public Area - SW Pond	2024	Site Preparation	Worker Commute	0	0.000	0.000	0.000	0.000	0.000	0.000	0.000	0.000	0.000	0.000	0.000	0.000	0.000	0.000	0.000	0.000	0.000	0.000	0.000	0.000	0.000	0.000	0.000
Western Entrance	2024	Site Preparation	Worker Commute	0	0.000	0.000	0.000	0.000	0.000	0.000	0.000	0.000	0.000	0.000	0.000	0.000	0.000	0.000	0.000	0.000	0.000	0.000	0.000	0.000	0.000	0.000	0.000
Shared Site Utilities	2024	Site Preparation	Worker Commute	0	0.000	0.000	0.000	0.000	0.000	0.000	0.000	0.000	0.000	0.000	0.000	0.000	0.000	0.000	0.000	0.000	0.000	0.000	0.000	0.000	0.000	0.000	0.000
Compost Facility	2025	Site Preparation	Worker Commute	0	0.000	0.000	0.000	0.000	0.000	0.000	0.000	0.000	0.000	0.000	0.000	0.000	0.000	0.000	0.000	0.000	0.000	0.000	0.000	0.000	0.000	0.000	0.000
Compost Facility - SW Pond	2025	Site Preparation	Worker Commute	0	0.000	0.000	0.000	0.000	0.000	0.000	0.000	0.000	0.000	0.000	0.000	0.000	0.000	0.000	0.000	0.000	0.000	0.000	0.000	0.000	0.000	0.000	0.000
Landfill Construction3	2028	Site Preparation	Worker Commute	0	0.000	0.000	0.000	0.000	0.000	0.000	0.000	0.000	0.000	0.000	0.000	0.000	0.000	0.000	0.000	0.000	0.000	0.000	0.000	0.000	0.000	0.000	0.000
Landfill Lining & Partial Closure4	2029	Site Preparation	Worker Commute	0	0.000	0.000	0.000	0.000	0.000	0.000	0.000	0.000	0.000	0.000	0.000	0.000	0.000	0.000	0.000	0.000	0.000	0.000	0.000	0.000	0.000	0.000	0.000
Recovered Materials Storage	2029	Site Preparation	Worker Commute	0	0.000	0.000	0.000	0.000	0.000	0.000	0.000	0.000	0.000	0.000	0.000	0.000	0.000	0.000	0.000	0.000	0.000	0.000	0.000	0.000	0.000	0.000	0.000
HHW Storage	2029	Site Preparation	Worker Commute	0	0.000	0.000	0.000	0.000	0.000	0.000	0.000	0.000	0.000	0.000	0.000	0.000	0.000	0.000	0.000	0.000	0.000	0.000	0.000	0.000	0.000	0.000	0.000
Primary Maintenance Facility	2033	Site Preparation	Worker Commute	0	0.000	0.000	0.000	0.000	0.000	0.000	0.000	0.000	0.000	0.000	0.000	0.000	0.000	0.000	0.000	0.000	0.000	0.000	0.000	0.000	0.000	0.000	0.000
Stockpile Relocation	2033	Site Preparation	Worker Commute	0	0.000	0.000	0.000	0.000	0.000	0.000	0.000	0.000	0.000	0.000	0.000	0.000	0.000	0.000	0.000	0.000	0.000	0.000	0.000	0.000	0.000	0.000	0.000
Public Area	2024	Grading	Worker Commute	0	0.000	0.000	0.000	0.000	0.000	0.000	0.000	0.000	0.000	0.000	0.000	0.000	0.000	0.000	0.000	0.000	0.000	0.000	0.000	0.000	0.000	0.000	0.000
Public Area - SW Pond	2024	Grading	Worker Commute	0	0.000	0.000	0.000	0.000	0.000	0.000	0.000	0.000	0.000	0.000	0.000	0.000	0.000	0.000	0.000	0.000	0.000	0.000	0.000	0.000	0.000	0.000	0.000
Western Entrance	2024	Grading	Worker Commute	0	0.000	0.000	0.000	0.000	0.000	0.000	0.000	0.000	0.000	0.000	0.000	0.000	0.000	0.000	0.000	0.000	0.000	0.000	0.000	0.000	0.000	0.000	0.000
Shared Site Utilities	2024	Grading	Worker Commute	0	0.000	0.000	0.000	0.000	0.000	0.000	0.000	0.000	0.000	0.000	0.000	0.000	0.000	0.000	0.000	0.000	0.000	0.000	0.000	0.000	0.000	0.000	0.000
Compost Facility	2025	Grading	Worker Commute	0	0.000	0.000	0.000	0.000	0.000	0.000	0.000	0.000	0.000	0.000	0.000	0.000	0.000	0.000	0.000	0.000	0.000	0.000	0.000	0.000	0.000	0.000	0.000
Compost Facility - SW Pond	2025	Grading	Worker Commute	0	0.000	0.000	0.000	0.000	0.000	0.000	0.000	0.000	0.000	0.000	0.000	0.000	0.000	0.000	0.000	0.000	0.000	0.000	0.000	0.000	0.000	0.000	0.000
Landfill Construction3	2028	Grading	Worker Commute	0	0.000	0.000	0.000	0.000	0.000	0.000	0.000	0.000	0.000	0.000	0.000	0.000	0.000	0.000	0.000	0.000	0.000	0.000	0.000	0.000	0.000	0.000	0.000
Landfill Lining & Partial Closure4	2029	Grading	Worker Commute	0	0.000	0.000	0.000	0.000	0.000	0.000	0.000	0.000	0.000	0.000	0.000	0.000	0.000	0.000	0.000	0.000	0.000	0.000	0.000	0.000	0.000	0.000	0.000
Recovered Materials Storage	2029	Grading	Worker Commute	0	0.000	0.000	0.000	0.000	0.000	0.000	0.000	0.000	0.000	0.000	0.000	0.000	0.000	0.000	0.000	0.000	0.000	0.000	0.000	0.000	0.000	0.000	0.000
HHW Storage	2029	Grading	Worker Commute	0	0.000	0.000	0.000	0.000	0.000	0.000	0.000	0.000	0.000	0.000	0.000	0.000	0.000	0.000	0.000	0.000	0.000	0.000	0.000	0.000	0.000	0.000	0.000
Primary Maintenance Facility	2033	Grading	Worker Commute	0	0.000	0.000	0.000	0.000	0.000	0.000	0.000	0.000	0.000	0.000	0.000	0.000	0.000	0.000	0.000	0.000	0.000	0.000	0.000	0.000	0.000	0.000	0.000
Stockpile Relocation	2033	Grading	Worker Commute	0	0.000	0.000	0.000	0.000	0.000	0.000	0.000	0.000	0.000	0.000	0.000	0.000	0.000	0.000	0.000	0.000	0.000	0.000	0.000	0.000	0.000	0.000	0.000
Public Area	2024	Building Construction	Worker Commute	0	0.000	0.000	0.000	0.000	0.000	0.000	0.000	0.000	0.000	0.000	0.000	0.000	0.000	0.000	0.000	0.000	0.000	0.000	0.000	0.000	0.000	0.000	0.000
Public Area - SW Pond	2024	Building Construction	Worker Commute	0	0.000	0.000	0.000	0.000	0.000	0.000	0.000	0.000	0.000	0.000	0.000	0.000	0.000	0.000	0.000	0.000	0.000	0.000	0.000	0.000	0.000	0.000	0.000
Western Entrance	2024	Building Construction	Worker Commute	0	0.000	0.000	0.000	0.000	0.000	0.000	0.000	0.000	0.000	0.000	0.000	0.000	0.000	0.000	0.000	0.000	0.000	0.000	0.000	0.000	0.000	0.000	0.000
Shared Site Utilities	2024	Building Construction	Worker Commute	0	0.000	0.000	0.000	0.000	0.000	0.000	0.000	0.000	0.000	0.000	0.000	0.000	0.000	0.000	0.000	0.000	0.000	0.000	0.000	0.000	0.000	0.000	0.000
Compost Facility	2025	Building Construction	Worker Commute	0	0.000	0.000	0.000	0.000	0.000	0.000	0.000	0.000	0.000	0.000	0.000	0.000	0.000	0.000	0.000	0.000	0.000	0.000	0.000	0.000	0.000	0.000	0.000
Compost Facility - SW Pond	2025	Building Construction	Worker Commute	0	0.000	0.000	0.000	0.000	0.000	0.000	0.000	0.000	0.000	0.000	0.000	0.000	0.000	0.000	0.000	0.000	0.000	0.000	0.000	0.000	0.000	0.000	0.000
Landfill Construction3	2028	Building Construction	Worker Commute	0	0.000	0.000	0.000	0.000	0.000	0.000	0.000	0.000	0.000	0.000	0.000	0.000	0.000	0.000	0.000	0.000	0.000	0.000	0.000	0.000	0.000	0.000	0.000
Landfill Lining & Partial Closure4	2029	Building Construction	Worker Commute	0	0.000	0.000	0.000	0.000	0.000	0.000	0.000	0.000	0.000	0.000	0.000	0.000	0.000	0.000	0.000	0.000	0.000	0.000	0.000	0.000	0.000	0.000	0.000
Recovered Materials Storage	2029	Building Construction	Worker Commute	0	0.000	0.000	0.000	0.000	0.000	0.000	0.000	0.000	0.000	0.000	0.000	0.000	0.000	0.000	0.000	0.000	0.000	0.000	0.000	0.000	0.000	0.000	0.000
HHW Storage	2029	Building Construction	Worker Commute	0	0.000	0.000	0.000	0.000	0.000	0.000	0.000	0.000	0.000	0.000	0.000	0.000	0.000	0.000	0.000	0.000	0.000	0.000	0.000	0.000	0.000	0.000	0.000
Primary Maintenance Facility	2033	Building Construction	Worker Commute	0	0.000	0.000	0.000	0.000	0.000	0.000	0.000	0.000	0.000	0.000	0.000	0.000	0.000	0.000	0.000	0.000	0.000	0.000	0.000	0.000	0.000	0.000	0.000
Stockpile Relocation	2033	Building Construction	Worker Commute	0	0.000	0.000	0.000	0.000	0.000	0.000	0.000	0.000	0.000	0.000	0.000	0.000	0.000	0.000	0.000	0.000	0.000	0.000	0.000	0.000	0.000	0.000	0.000
Public Area	2024	Paving - Asphalt	Worker Commute	0	0.000	0.000	0.000	0.000	0.000	0.000	0.000	0.000	0.000	0.000	0.000	0.000	0.000	0.000	0.000	0.000	0.000	0.000	0.000	0.000	0.000	0.000	0.000
Public Area - SW Pond	2024	Paving - Asphalt	Worker Commute	0	0.000	0.000	0.000	0.000	0.000	0.000	0.000	0.000	0.000	0.000	0.000	0.000	0.000	0.000	0.000	0.000	0.000	0.000	0.000	0.000	0.000	0.000	0.000
Western Entrance	2024	Paving - Asphalt	Worker Commute	0	0.000	0.000	0.000	0.000	0.000	0.000	0.000	0.000	0.000	0.000	0.000	0.000	0.000	0.000	0.000	0.000	0.000	0.000	0.000	0.000	0.000	0.000	0.000
Shared Site Utilities	2024	Paving - Asphalt	Worker Commute	0	0.000	0.000	0.000	0.000	0.000	0.000	0.000	0.000	0.000	0.000	0.000	0.000	0.000	0.000	0.000	0.000	0.000	0.000	0.000	0.000	0.000	0.000	0.000
Compost Facility	2025	Paving - Asphalt	Worker Commute	0	0.000	0.000	0.000	0.000	0.000	0.000	0.000	0.000	0.000	0.000	0.000	0.000	0.000	0.000	0.000	0.000	0.000	0.000	0.000	0.000	0.000	0.000	0.000
Compost Facility - SW Pond	2025	Paving - Asphalt	Worker Commute	0	0.000	0.000	0.000	0.000	0.000	0.000	0.000	0.000	0.000	0.000	0.000	0.000	0.000	0.000	0.000	0.000	0.000	0.000	0.000	0.000	0.000	0.000	0.000
Landfill Construction3	2028	Paving - Asphalt	Worker Commute	0	0.000	0.000	0.000	0.000	0.000	0.000	0.000	0.000	0.000	0.000	0.000	0.000	0.000	0.000	0.000	0.000	0.000	0.000	0.000	0.000	0.000	0.000	0.000
Landfill Lining & Partial Closure4	2029	Paving - Asphalt	Worker Commute	0	0.000	0.000	0.000	0.000	0.000	0.000	0.000	0.000	0.000	0.000	0.000	0.000	0.000	0.000	0.000	0.000	0.000	0.000	0.000	0.000	0.000	0.000	0.000
Recovered Materials Storage	2029	Paving - Asphalt	Worker Commute	0	0.000	0.000	0.000	0.000	0.000	0.000	0.000	0.000	0.000	0.000	0.000	0.000	0.000	0.000	0.000	0.000	0.000	0.000	0.000	0.000	0.000	0.000	0.000
HHW Storage	2029	Paving - Asphalt	Worker Commute	0	0.000	0.000	0.000	0.000	0.000	0.000	0.000	0.000	0.000	0.000	0.000	0.000	0.000	0.000	0.000	0.000	0.000	0.000	0.000	0.000	0.000	0.000	0.000
Primary Maintenance Facility	2033	Paving - Asphalt	Worker Commute	0	0.000	0.000	0.000	0.000	0.000	0.000	0.000	0.000	0.000	0.000	0.000	0.000	0.000	0.000	0.000	0.000	0.000	0.000	0.000	0.000	0.000	0.000	0.000
Stockpile Relocation	2033	Paving - Asphalt	Worker Commute	0	0.000	0.000	0.000	0.000	0.000	0.000	0.000	0.000	0.000	0.000	0.000	0.000	0.000	0.000	0.000	0.000	0.000	0.000	0.000	0.000	0.000	0.000	0.000
Public Area	2024	Paving - Concrete	Worker Commute	0	0.000	0.000	0.000	0.000	0.000	0.000	0.000	0.000	0.000	0.000	0.000	0.000	0.000	0.000	0.000	0.000	0.000	0.000	0.000	0.000	0.000	0.000	0.000
Public Area - SW Pond	2024	Paving - Concrete	Worker Commute	0	0.000	0.000	0.000	0.000	0.000	0.000	0.000	0.000	0.000	0.000	0.000	0.000	0.000	0.000	0.000	0.000	0.000	0.000	0.000	0.000	0.000	0.000	0.000
Western Entrance	2024	Paving - Concrete	Worker Commute	0	0.000	0.000	0.000	0.000	0.000	0.000	0.000	0.000	0.000	0.000	0.000	0.000	0.000	0.000	0.000	0.000	0.000	0.000	0.000	0.000	0.000	0.000	0.000
Shared Site Utilities	2024	Paving - Concrete	Worker Commute	0	0.000	0.000	0.000	0.000	0.000	0.000	0.000	0.000	0.000	0.000	0.000	0.000	0.000	0.000	0.000	0.000	0.000	0.000	0.000	0.000	0.000	0.000	0.000
Compost Facility	2025	Paving - Concrete	Worker Commute	0	0.000	0.000	0.000	0.000	0.000	0.000	0.000	0.000	0.000	0.000	0.000	0.000	0.000	0.000	0.000	0.000	0.000	0.000	0.000	0.000	0.000	0.000	0.000
Compost Facility - SW Pond	2025	Paving - Concrete	Worker Commute	0	0.000	0.000	0.000	0.000	0.000	0.000	0.000	0.000	0.000	0.000	0.000	0.000	0.000	0.000	0.000	0.000	0.000	0.000	0.000	0.000	0.000	0.000	0.000
Landfill Construction3	2028	Paving - Concrete	Worker Commute	0	0.000	0.000	0.000	0.000	0.000	0.000	0.000	0.000	0.000	0.000	0.000	0.000	0.000	0.000	0.000	0.000	0.000	0.000	0.000	0.000	0.000	0.000	0.000
Landfill Lining & Partial Closure4	2029	Paving - Concrete	Worker Commute	0	0.000	0.000	0.000	0.000	0.000	0.000	0.000	0.000	0.000	0.000	0.000	0.000	0.000	0.000	0.000	0.000	0.000	0.000	0.000	0.000	0.000	0.000	0.000
Recovered Materials Storage	2029	Paving - Concrete	Worker Commute	0	0.000	0.000	0.000	0.000	0.000	0.000	0.000	0.000	0.000	0.000	0.000	0.000	0.000	0.000	0.000	0.000	0.000	0.000	0.000	0.000	0.000	0.000	0.000
HHW Storage	2029	Paving - Concrete	Worker Commute	0	0.000	0.000	0.000	0.000	0.000	0.000	0.000	0.000	0.000	0.000	0.000	0.000	0.000	0.000	0.000	0.000	0.000	0.000	0.000	0.000	0.000	0.000	0.000
Primary Maintenance Facility	2033	Paving - Concrete	Worker Commute	0	0.000	0.000	0.000	0.000	0.000	0.000	0.000	0.000	0.000	0.000	0.000	0.000	0.000	0.000	0.000	0.000	0.000	0.000	0.000	0.000	0.000	0.000	0.000
Stockpile Relocation	2033	Paving - Concrete	Worker Commute	0	0.000	0.000	0.000	0.000	0.000	0.000	0.000	0.000	0.000	0.000	0.000	0.000	0.000	0.000	0.000	0.000	0.000	0.000	0.000	0.000	0.000	0.000	0.000
Public Area	2024	Site Preparation - Pond	Worker Commute	0	0.000	0.000	0.000	0.000	0.000	0.000	0.000	0.000	0.000	0.000	0.000	0.000	0.000	0.000	0.000	0.000	0.000	0.000	0.000	0.000	0.000	0.000	0.000
Public Area - SW Pond	2024	Site Preparation - Pond	Worker Commute	0	0.000	0.000	0.000	0.000	0.000	0.000	0.000	0.000	0.000	0.000	0.000	0.000	0.000	0.000	0.000	0.000	0.000	0.000	0.000	0.000	0.000	0.000	0.000
Western Entrance	2024	Site Preparation - Pond	Worker Commute	0	0.000	0.000	0.000	0.000	0.000	0.000	0.000	0.000	0.000	0.000	0.000	0.000	0.000	0.000	0.000	0.000	0.000	0.000	0.000	0.000	0.000	0.000	0.000
Shared Site Utilities	2024	Site Preparation - Pond	Worker Commute	0	0.000	0.000	0.000	0.000	0.000	0.000	0.000	0.000	0.000	0.000	0.000	0.000	0.000	0.000	0.000	0.000	0.000	0.000	0.000	0.000	0.000	0.000	0.000
Compost Facility	2025	Site Preparation - Pond	Worker Commute	0	0.000	0.000	0.000	0.000	0.000	0.000	0.000	0.000	0.000	0.000	0.000	0.000	0.000	0.000	0.000	0.000	0.000	0.000	0.000	0.000	0.000	0.000	0.000
Compost Facility - SW Pond	2025	Site Preparation - Pond	Worker Commute	0	0.000	0.000	0.000	0.000	0.000	0.000	0.000	0.000	0.000	0.000	0.000	0.000	0.000	0.000	0.000	0.000	0.000	0.000	0.000	0.000	0.000	0.000	0.000
Landfill Construction3	2028	Site Preparation - Pond	Worker Commute	0	0.000	0.000	0.000	0.000	0.000	0.000	0.000	0.000	0.000	0.000	0.000	0.000	0.000	0.000	0.000	0.000	0.000	0.000	0.000	0.000	0.000	0.000	0.000
Landfill Lining & Partial Closure4	2029	Site Preparation - Pond	Worker Commute	0	0.000	0.000	0.000	0.000	0.000	0.000	0.000	0.000	0.000	0.000	0.000	0.000	0.000	0.000	0.000	0.000	0.000	0.000	0.000	0.000	0.000	0.000	0.000
Recovered Materials Storage	2029	Site Preparation - Pond	Worker Commute	0	0.000	0.000	0.000	0.000	0.000	0.000	0.000	0.000	0.000	0.000	0.000	0.000	0.000	0.000	0.000	0.000	0.000	0.000	0.000	0.000	0.000	0.000	0.000
HHW Storage	2029	Site Preparation - Pond	Worker Commute	0	0.000	0.000	0.000	0.000	0.000	0.000	0.000	0.000	0.000	0.000	0.000	0.000	0.000	0.000	0.000	0.000	0.000	0.000	0.000	0.000	0.000	0.000	0.000
Primary Maintenance Facility	2033	Site Preparation - Pond	Worker Commute	0	0.000	0.000	0.000	0.000	0.000	0.000	0.000	0.000	0.000	0.000	0.000	0.000	0.000	0.000	0.000	0.000	0.000	0.000	0.000	0.000	0.000	0.000	0.000
Stockpile Relocation	2033	Site Preparation - Pond	Worker Commute	0	0.000	0.000	0.000	0.000	0.000	0.000	0.000	0.000	0.000	0.000	0.000	0.000	0.000	0.000	0.000	0.000	0.000	0.000	0.000	0.000	0.000	0.000	0.000
Public Area	2024	Excavation	Worker Commute	0	0.000	0.000	0.000	0.000	0.000	0.000	0.000	0.000	0.000	0.000	0.000	0.000	0.000	0.000	0.000	0.000	0.000	0.000	0.000	0.000	0.000	0.000	0.000
Public Area - SW Pond	2024	Excavation	Worker Commute	0	0.000	0.000	0.000	0.000	0.000	0.000	0.000	0.000	0.000	0.000	0.000	0.000	0.000	0.000	0.000	0.000	0.000	0.000	0.000	0.000	0.000	0.000	0.000
Western Entrance	2024	Excavation	Worker Commute	0	0.000	0.000	0.000	0.000	0.000	0.000	0.000	0.000	0.000	0.000	0.000	0.000	0.000	0.000	0.000	0.000	0.000	0.000	0.000	0.000	0.000	0.000	0.000
Shared Site Utilities	2024	Excavation	Worker Commute	0	0.000	0.000	0.000	0.000	0.000	0.000	0.000	0.000	0.000	0.000	0.000	0.000	0.000	0.000	0.000	0.000	0.000	0.000	0.000	0.000	0.000	0.000	0.000
Compost Facility	2025	Excavation	Worker Commute	0	0.000	0.000	0.000	0.000	0.000	0.000	0.000	0.000	0.000	0.000	0.000	0.000	0.000	0.000	0.000	0.000	0.000	0.000	0.000	0.000	0.000	0.000	0.000
Compost Facility - SW Pond	2025	Excavation	Worker Commute	0	0.000	0.000	0.000	0.000	0.000	0.000	0.000	0.000	0.000	0.000	0.000	0.000	0.000	0.000	0.000	0.000	0.000	0.000	0.000	0.000	0.000	0.000	0.000
Landfill Construction3	2028

WPWMA EIR
Construction Onroad Emissions
Plan Concept 1

Recovered Materials Storage	2029	Excavation	Worker Commute	0	0,000	0,000	0,000	0,000	0,000	0,000	0,000	0,000	0,000	0,000	0,000	0,000	0,000	0,000	0,000	0,000	0,000	0,000	0,000	0,000	0,000	0,000	0,000	0,000	0,000
HHW Storage	2029	Excavation	Worker Commute	0	0,000	0,000	0,000	0,000	0,000	0,000	0,000	0,000	0,000	0,000	0,000	0,000	0,000	0,000	0,000	0,000	0,000	0,000	0,000	0,000	0,000	0,000	0,000	0,000	0,000
Primary Maintenance Facility	2033	Excavation	Worker Commute	0	0,000	0,000	0,000	0,000	0,000	0,000	0,000	0,000	0,000	0,000	0,000	0,000	0,000	0,000	0,000	0,000	0,000	0,000	0,000	0,000	0,000	0,000	0,000	0,000	0,000
Stockpile Relocation	2033	Excavation	Worker Commute	0	0,000	0,000	0,000	0,000	0,000	0,000	0,000	0,000	0,000	0,000	0,000	0,000	0,000	0,000	0,000	0,000	0,000	0,000	0,000	0,000	0,000	0,000	0,000	0,000	0,000
Public Area	2024	Lining and Partial Closure	Worker Commute	0	0,000	0,000	0,000	0,000	0,000	0,000	0,000	0,000	0,000	0,000	0,000	0,000	0,000	0,000	0,000	0,000	0,000	0,000	0,000	0,000	0,000	0,000	0,000	0,000	0,000
Public Area - SW Pond	2024	Lining and Partial Closure	Worker Commute	0	0,000	0,000	0,000	0,000	0,000	0,000	0,000	0,000	0,000	0,000	0,000	0,000	0,000	0,000	0,000	0,000	0,000	0,000	0,000	0,000	0,000	0,000	0,000	0,000	0,000
Western Entrance	2024	Lining and Partial Closure	Worker Commute	0	0,000	0,000	0,000	0,000	0,000	0,000	0,000	0,000	0,000	0,000	0,000	0,000	0,000	0,000	0,000	0,000	0,000	0,000	0,000	0,000	0,000	0,000	0,000	0,000	0,000
Shared Site Utilities	2024	Lining and Partial Closure	Worker Commute	0	0,000	0,000	0,000	0,000	0,000	0,000	0,000	0,000	0,000	0,000	0,000	0,000	0,000	0,000	0,000	0,000	0,000	0,000	0,000	0,000	0,000	0,000	0,000	0,000	0,000
Compost Facility	2025	Lining and Partial Closure	Worker Commute	0	0,000	0,000	0,000	0,000	0,000	0,000	0,000	0,000	0,000	0,000	0,000	0,000	0,000	0,000	0,000	0,000	0,000	0,000	0,000	0,000	0,000	0,000	0,000	0,000	0,000
Compost Facility - SW Pond	2025	Lining and Partial Closure	Worker Commute	0	0,000	0,000	0,000	0,000	0,000	0,000	0,000	0,000	0,000	0,000	0,000	0,000	0,000	0,000	0,000	0,000	0,000	0,000	0,000	0,000	0,000	0,000	0,000	0,000	0,000
Landfill Construction3	2028	Lining and Partial Closure	Worker Commute	0	0,000	0,000	0,000	0,000	0,000	0,000	0,000	0,000	0,000	0,000	0,000	0,000	0,000	0,000	0,000	0,000	0,000	0,000	0,000	0,000	0,000	0,000	0,000	0,000	0,000
Landfill Lining & Partial Closure4	2029	Lining and Partial Closure	Worker Commute	0	0,000	0,000	0,000	0,000	0,000	0,000	0,000	0,000	0,000	0,000	0,000	0,000	0,000	0,000	0,000	0,000	0,000	0,000	0,000	0,000	0,000	0,000	0,000	0,000	0,000
Recovered Materials Storage	2029	Lining and Partial Closure	Worker Commute	0	0,000	0,000	0,000	0,000	0,000	0,000	0,000	0,000	0,000	0,000	0,000	0,000	0,000	0,000	0,000	0,000	0,000	0,000	0,000	0,000	0,000	0,000	0,000	0,000	0,000
HHW Storage	2029	Lining and Partial Closure	Worker Commute	0	0,000	0,000	0,000	0,000	0,000	0,000	0,000	0,000	0,000	0,000	0,000	0,000	0,000	0,000	0,000	0,000	0,000	0,000	0,000	0,000	0,000	0,000	0,000	0,000	0,000
Primary Maintenance Facility	2033	Lining and Partial Closure	Worker Commute	0	0,000	0,000	0,000	0,000	0,000	0,000	0,000	0,000	0,000	0,000	0,000	0,000	0,000	0,000	0,000	0,000	0,000	0,000	0,000	0,000	0,000	0,000	0,000	0,000	0,000
Stockpile Relocation	2033	Lining and Partial Closure	Worker Commute	0	0,000	0,000	0,000	0,000	0,000	0,000	0,000	0,000	0,000	0,000	0,000	0,000	0,000	0,000	0,000	0,000	0,000	0,000	0,000	0,000	0,000	0,000	0,000	0,000	0,000
Public Area	2024	Stockpile Movement	Worker Commute	0	0,000	0,000	0,000	0,000	0,000	0,000	0,000	0,000	0,000	0,000	0,000	0,000	0,000	0,000	0,000	0,000	0,000	0,000	0,000	0,000	0,000	0,000	0,000	0,000	0,000
Public Area - SW Pond	2024	Stockpile Movement	Worker Commute	0	0,000	0,000	0,000	0,000	0,000	0,000	0,000	0,000	0,000	0,000	0,000	0,000	0,000	0,000	0,000	0,000	0,000	0,000	0,000	0,000	0,000	0,000	0,000	0,000	0,000
Western Entrance	2024	Stockpile Movement	Worker Commute	0	0,000	0,000	0,000	0,000	0,000	0,000	0,000	0,000	0,000	0,000	0,000	0,000	0,000	0,000	0,000	0,000	0,000	0,000	0,000	0,000	0,000	0,000	0,000	0,000	0,000
Shared Site Utilities	2024	Stockpile Movement	Worker Commute	0	0,000	0,000	0,000	0,000	0,000	0,000	0,000	0,000	0,000	0,000	0,000	0,000	0,000	0,000	0,000	0,000	0,000	0,000	0,000	0,000	0,000	0,000	0,000	0,000	0,000
Compost Facility	2025	Stockpile Movement	Worker Commute	0	0,000	0,000	0,000	0,000	0,000	0,000	0,000	0,000	0,000	0,000	0,000	0,000	0,000	0,000	0,000	0,000	0,000	0,000	0,000	0,000	0,000	0,000	0,000	0,000	0,000
Compost Facility - SW Pond	2025	Stockpile Movement	Worker Commute	0	0,000	0,000	0,000	0,000	0,000	0,000	0,000	0,000	0,000	0,000	0,000	0,000	0,000	0,000	0,000	0,000	0,000	0,000	0,000	0,000	0,000	0,000	0,000	0,000	0,000
Landfill Construction3	2028	Stockpile Movement	Worker Commute	0	0,000	0,000	0,000	0,000	0,000	0,000	0,000	0,000	0,000	0,000	0,000	0,000	0,000	0,000	0,000	0,000	0,000	0,000	0,000	0,000	0,000	0,000	0,000	0,000	0,000
Landfill Lining & Partial Closure4	2029	Stockpile Movement	Worker Commute	0	0,000	0,000	0,000	0,000	0,000	0,000	0,000	0,000	0,000	0,000	0,000	0,000	0,000	0,000	0,000	0,000	0,000	0,000	0,000	0,000	0,000	0,000	0,000	0,000	0,000
Recovered Materials Storage	2029	Stockpile Movement	Worker Commute	0	0,000	0,000	0,000	0,000	0,000	0,000	0,000	0,000	0,000	0,000	0,000	0,000	0,000	0,000	0,000	0,000	0,000	0,000	0,000	0,000	0,000	0,000	0,000	0,000	0,000
HHW Storage	2029	Stockpile Movement	Worker Commute	0	0,000	0,000	0,000	0,000	0,000	0,000	0,000	0,000	0,000	0,000	0,000	0,000	0,000	0,000	0,000	0,000	0,000	0,000	0,000	0,000	0,000	0,000	0,000	0,000	0,000
Primary Maintenance Facility	2033	Stockpile Movement	Worker Commute	0	0,000	0,000	0,000	0,000	0,000	0,000	0,000	0,000	0,000	0,000	0,000	0,000	0,000	0,000	0,000	0,000	0,000	0,000	0,000	0,000	0,000	0,000	0,000	0,000	0,000
Stockpile Relocation	2033	Stockpile Movement	Worker Commute	0	0,000	0,000	0,000	0,000	0,000	0,000	0,000	0,000	0,000	0,000	0,000	0,000	0,000	0,000	0,000	0,000	0,000	0,000	0,000	0,000	0,000	0,000	0,000	0,000	0,000
Public Area	2024	Demolition	Vendor/Material Hauling	0	0,000	0,000	0,000	0,000	0,000	0,000	0,000	0,000	0,000	0,000	0,000	0,000	0,000	0,000	0,000	0,000	0,000	0,000	0,000	0,000	0,000	0,000	0,000	0,000	0,000
Public Area - SW Pond	2024	Demolition	Vendor/Material Hauling	0	0,000	0,000	0,000	0,000	0,000	0,000	0,000	0,000	0,000	0,000	0,000	0,000	0,000	0,000	0,000	0,000	0,000	0,000	0,000	0,000	0,000	0,000	0,000	0,000	0,000
Western Entrance	2024	Demolition	Vendor/Material Hauling	0	0,000	0,000	0,000	0,000	0,000	0,000	0,000	0,000	0,000	0,000	0,000	0,000	0,000	0,000	0,000	0,000	0,000	0,000	0,000	0,000	0,000	0,000	0,000	0,000	0,000
Shared Site Utilities	2024	Demolition	Vendor/Material Hauling	0	0,000	0,000	0,000	0,000	0,000	0,000	0,000	0,000	0,000	0,000	0,000	0,000	0,000	0,000	0,000	0,000	0,000	0,000	0,000	0,000	0,000	0,000	0,000	0,000	0,000
Compost Facility	2025	Demolition	Vendor/Material Hauling	0	0,000	0,000	0,000	0,000	0,000	0,000	0,000	0,000	0,000	0,000	0,000	0,000	0,000	0,000	0,000	0,000	0,000	0,000	0,000	0,000	0,000	0,000	0,000	0,000	0,000
Compost Facility - SW Pond	2025	Demolition	Vendor/Material Hauling	0	0,000	0,000	0,000	0,000	0,000	0,000	0,000	0,000	0,000	0,000	0,000	0,000	0,000	0,000	0,000	0,000	0,000	0,000	0,000	0,000	0,000	0,000	0,000	0,000	0,000
Landfill Construction3	2028	Demolition	Vendor/Material Hauling	0	0,000	0,000	0,000	0,000	0,000	0,000	0,000	0,000	0,000	0,000	0,000	0,000	0,000	0,000	0,000	0,000	0,000	0,000	0,000	0,000	0,000	0,000	0,000	0,000	0,000
Landfill Lining & Partial Closure4	2029	Demolition	Vendor/Material Hauling	0	0,000	0,000	0,000	0,000	0,000	0,000	0,000	0,000	0,000	0,000	0,000	0,000	0,000	0,000	0,000	0,000	0,000	0,000	0,000	0,000	0,000	0,000	0,000	0,000	0,000
Recovered Materials Storage	2029	Demolition	Vendor/Material Hauling	0	0,000	0,000	0,000	0,000	0,000	0,000	0,000	0,000	0,000	0,000	0,000	0,000	0,000	0,000	0,000	0,000	0,000	0,000	0,000	0,000	0,000	0,000	0,000	0,000	0,000
HHW Storage	2029	Demolition	Vendor/Material Hauling	0	0,000	0,000	0,000	0,000	0,000	0,000	0,000	0,000	0,000	0,000	0,000	0,000	0,000	0,000	0,000	0,000	0,000	0,000	0,000	0,000	0,000	0,000	0,000	0,000	0,000
Primary Maintenance Facility	2033	Demolition	Vendor/Material Hauling	0	0,000	0,000	0,000	0,000	0,000	0,000	0,000	0,000	0,000	0,000	0,000	0,000	0,000	0,000	0,000	0,000	0,000	0,000	0,000	0,000	0,000	0,000	0,000	0,000	0,000
Stockpile Relocation	2033	Demolition	Vendor/Material Hauling	0	0,000	0,000	0,000	0,000	0,000	0,000	0,000	0,000	0,000	0,000	0,000	0,000	0,000	0,000	0,000	0,000	0,000	0,000	0,000	0,000	0,000	0,000	0,000	0,000	0,000
Public Area	2024	Site Preparation	Vendor/Material Hauling	0	0,000	0,000	0,000	0,000	0,000	0,000	0,000	0,000	0,000	0,000	0,000	0,000	0,000	0,000	0,000	0,000	0,000	0,000	0,000	0,000	0,000	0,000	0,000	0,000	0,000
Public Area - SW Pond	2024	Site Preparation	Vendor/Material Hauling	0	0,000	0,000	0,000	0,000	0,000	0,000	0,000	0,000	0,000	0,000	0,000	0,000	0,000	0,000	0,000	0,000	0,000	0,000	0,000	0,000	0,000	0,000	0,000	0,000	0,000
Western Entrance	2024	Site Preparation	Vendor/Material Hauling	0	0,000	0,000	0,000	0,000	0,000	0,000	0,000	0,000	0,000	0,000	0,000	0,000	0,000	0,000	0,000	0,000	0,000	0,000	0,000	0,000	0,000	0,000	0,000	0,000	0,000
Shared Site Utilities	2024	Site Preparation	Vendor/Material Hauling	0	0,000	0,000	0,000	0,000	0,000	0,000	0,000	0,000	0,000	0,000	0,000	0,000	0,000	0,000	0,000	0,000	0,000	0,000	0,000	0,000	0,000	0,000	0,000	0,000	0,000
Compost Facility	2025	Site Preparation	Vendor/Material Hauling	0	0,000	0,000	0,000	0,000	0,000	0,000	0,000	0,000	0,000	0,000	0,000	0,000	0,000	0,000	0,000	0,000	0,000	0,000	0,000	0,000	0,000	0,000	0,000	0,000	0,000
Compost Facility - SW Pond	2025	Site Preparation	Vendor/Material Hauling	0	0,000	0,000	0,000	0,000	0,000	0,000	0,000	0,000	0,000	0,000	0,000	0,000	0,000	0,000	0,000	0,000	0,000	0,000	0,000	0,000	0,000	0,000	0,000	0,000	0,000
Landfill Construction3	2028	Site Preparation	Vendor/Material Hauling	0	0,000	0,000	0,000	0,000	0,000	0,000	0,000	0,000	0,000	0,000	0,000	0,000	0,000	0,000	0,000	0,000	0,000	0,000	0,000	0,000	0,000	0,000	0,000	0,000	0,000
Landfill Lining & Partial Closure4	2029	Site Preparation	Vendor/Material Hauling	0	0,000	0,000	0,000	0,000	0,000	0,000	0,000	0,000	0,000	0,000	0,000	0,000	0,000	0,000	0,000	0,000	0,000	0,000	0,000	0,000	0,000	0,000	0,000	0,000	0,000
Recovered Materials Storage	2029	Site Preparation	Vendor/Material Hauling	0	0,000	0,000	0,000	0,000	0,000	0,000	0,000	0,000	0,000	0,000	0,000	0,000	0,000	0,000	0,000	0,000	0,000	0,000	0,000	0,000	0,000	0,000	0,000	0,000	0,000
HHW Storage	2029	Site Preparation	Vendor/Material Hauling	0	0,000	0,000	0,000	0,000	0,000	0,000	0,000	0,000	0,000	0,000	0,000	0,000	0,000	0,000	0,000	0,000	0,000	0,000	0,000	0,000	0,000	0,000	0,000	0,000	0,000
Primary Maintenance Facility	2033	Site Preparation	Vendor/Material Hauling	0	0,000	0,000	0,000	0,000	0,000	0,000	0,000	0,000	0,000	0,000	0,000	0,000	0,000	0,000	0,000	0,000	0,000	0,000	0,000	0,000	0,000	0,000	0,000	0,000	0,000
Stockpile Relocation	2033	Site Preparation	Vendor/Material Hauling	0	0,000	0,000	0,000	0,000	0,000	0,000	0,000	0,000	0,000	0,000	0,000	0,000	0,000	0,000	0,000	0,000	0,000	0,000	0,000	0,000	0,000	0,000	0,000	0,000	0,000
Public Area	2024	Grading	Vendor/Material Hauling	0	0,000	0,000	0,000	0,000	0,000	0,000	0,000	0,000	0,000	0,000	0,000	0,000	0,000	0,000	0,000	0,000	0,000	0,000	0,000	0,000	0,000	0,000	0,000	0,000	0,000
Public Area - SW Pond	2024	Grading	Vendor/Material Hauling	0	0,000	0,000	0,000	0,000	0,000	0,000	0,000	0,000	0,000	0,000	0,000	0,000	0,000	0,000	0,000	0,000	0,000	0,000	0,000	0,000	0,000	0,000	0,000	0,000	0,000
Western Entrance	2024	Grading	Vendor/Material Hauling	0	0,000	0,000	0,000	0,000	0,000	0,000	0,000	0,000	0,000	0,000	0,000	0,000	0,000	0,000	0,000	0,000	0,000	0,000	0,000	0,000	0,000	0,000	0,000	0,000	0,000
Shared Site Utilities	2024	Grading	Vendor/Material Hauling	0	0,000	0,000	0,000	0,000	0,000	0,000	0,000	0,000	0,000	0,000	0,000	0,000	0,000	0,000	0,000	0,000	0,000	0,000	0,000	0,000	0,000	0,000	0,000	0,000	0,000
Compost Facility	2025	Grading	Vendor/Material Hauling	0	0,000	0,000	0,000	0,000	0,000	0,000	0,000	0,000	0,000	0,000	0,000	0,000	0,000	0,000	0,000	0,000	0,000	0,000	0,000	0,000	0,000	0,000	0,000	0,000	0,000
Compost Facility - SW Pond	2025	Grading	Vendor/Material Hauling	0	0,000	0,000	0,000	0,000	0,000	0,000	0,000	0,000	0,000	0,000	0,000	0,000	0,000	0,000	0,000	0,000	0,000	0,000	0,000	0,000	0,000	0,000	0,000	0,000	0,000
Landfill Construction3	2028	Grading	Vendor/Material Hauling	0	0,000	0,000	0,000	0,000	0,000	0,000	0,000	0,000	0,000	0,000	0,000	0,000	0,000	0,000	0,000	0,000	0,000	0,000	0,000	0,000	0,000	0,000	0,000	0,000	0,000
Landfill Lining & Partial Closure4	2029	Grading	Vendor/Material Hauling	0	0,000	0,000	0,000	0,000	0,000	0,000	0,000	0,000	0,000	0,000	0,000	0,000	0,000	0,000	0,000	0,000	0,000	0,000	0,000	0,000	0,000	0,000	0,000	0,000	0,000
Recovered Materials Storage	2029	Grading	Vendor/Material Hauling	0	0,000	0,000	0,000	0,000	0,000	0,000	0,000	0,000	0,000	0,000	0,000	0,000	0,000	0,000	0,000	0,000	0,000	0,000	0,000	0,000	0,000	0,000	0,000	0,000	0,000
HHW Storage	2029	Grading	Vendor/Material Hauling	0	0,000	0,000	0,000	0,000	0,000	0,000	0,000	0,000	0,000	0,000	0,000	0,000	0,000	0,000	0,000	0,000	0,000	0,000	0,000	0,000	0,000	0,000	0,000	0,000	0,000
Primary Maintenance Facility	2033	Grading	Vendor/Material Hauling	0	0,000	0,000	0,000	0,000	0,000	0,000	0,000	0,000	0,000	0,000	0,000	0,000	0,000	0,000	0,000	0,000	0,000	0,000	0,000	0,000	0,000	0,000	0,000	0,000	0,000
Stockpile Relocation	2033	Grading	Vendor/Material Hauling	0	0,000	0,000	0,000	0,000	0,000	0,000	0,000	0,000	0,000	0,000	0,000	0,000	0,000	0,000	0,000	0,000	0,000	0,000	0,000	0,000	0,000	0,000	0,000	0,000	0,000
Public Area	2024	Building Construction	Vendor/Material Hauling	0	0,000	0,000	0,000	0,000	0,000	0,000	0,000	0,000	0,000	0,000	0,000	0,000	0,000	0,000	0,000	0,000	0,000	0,000	0,000	0,000	0,000	0,000	0,000	0,000	0,000
Public Area - SW Pond	2024	Building Construction	Vendor/Material Hauling	0	0,000	0,000	0,000	0,000	0,000	0,000	0,000	0,000	0,000	0,000	0,000	0,000	0,000	0,000	0,000	0,000	0,000	0,000	0,000	0,000	0,000	0,000	0,000	0,000	0,000
Western Entrance	2024	Building Construction	Vendor/Material Hauling	0	0,000	0,000	0,000	0,000	0,000	0,000	0,000	0,000	0,000	0,000	0,000	0,000	0,000	0,000	0,000	0,000	0,000	0,000	0,000	0,000	0,000	0,000	0,000	0,000	0,000
Shared Site Utilities	2024	Building Construction	Vendor/Material Hauling	0	0,000	0,000	0,000	0,000	0,000	0,000	0,000	0,000	0,000	0,000	0,000	0,000	0,000	0,000	0,000	0,000	0,000	0,000	0,000	0,000	0,000	0,000	0,000	0,000	0,000
Compost Facility	2025	Building Construction	Vendor/Material Hauling	0	0,000	0,000	0,000	0,000	0,000	0,000	0,000	0,000	0,000	0,000	0,000	0,000	0,000	0,000	0,000	0,000	0,000	0,000	0,000	0,000	0,000	0,000	0,000	0,000	0,000
Compost Facility - SW Pond	2025	Building Construction	Vendor/Material Hauling	0	0,000	0,000	0,000	0,000	0,000	0,000	0,000	0,000	0,000	0,000	0,000	0,000	0,000	0,000	0,000	0,000	0,000	0,000	0,000	0,000	0,000	0,000	0,000	0,000	0,000
Landfill Construction3	2028	Building Construction	Vendor/Material Hauling	0	0,000	0,000	0,000	0,000	0,000	0,000	0,000	0,000	0,000	0,000	0,000	0,000	0,000	0,000	0,000	0,000	0,000	0,000	0,000	0,000	0,000	0,000	0,000	0,000	0,000
Landfill Lining & Partial Closure4	2029	Building Construction	Vendor/Material Hauling	0	0,000	0,000	0,000	0,000	0,000	0,000	0,000	0,000	0,000	0,000	0,000	0,000	0,000	0,000	0,000	0,000	0,000	0,000	0,000	0,000	0,000	0,000	0,000	0,000	0,000
Recovered Materials Storage	2029	Building Construction	Vendor/Material Hauling	0	0,000	0,000	0,000	0,000	0,000	0,000	0,000	0,000	0,000	0,000	0,000	0,000	0,000	0,000	0,000	0,000	0,000	0,000	0,000	0,000	0,000	0,000	0,000	0,000	0,000
HHW Storage	2029	Building Construction	Vendor/Material Hauling	0	0,000	0,000	0,000	0,000	0,000	0,000	0,000	0,000	0,000	0,000	0,000	0,000	0,000	0,000	0,000	0,000	0,000	0,000	0,000	0,000	0,000	0,000	0,000	0,000	0,000
Primary Maintenance Facility	2033	Building Construction	Vendor/Material Hauling	0	0,000	0,000	0,000	0,000	0,000	0,000	0,000	0,000	0,000	0,000	0,000	0,000	0,000	0,000	0,000	0,000	0,000	0,000	0,000	0,000	0,000	0,000	0,000	0,000	0,000
Stockpile Relocation	2033	Building Construction	Vendor/Material Hauling	0	0,000	0,000	0,000	0,000	0,000	0,000	0,000	0,000	0,000	0,000	0,000	0,000	0,000	0,000	0,000	0,000	0,000	0,000	0,000	0,000	0,000	0,000	0,000	0,000	0,000
Public Area	2024	Paving - Asphalt	Vendor/Material Hauling	0	0,000	0,000	0,000	0,000	0,000	0,000	0,000	0,000	0,000	0,000	0,000	0,000	0,000	0,000	0,000	0,000	0,000	0,000	0,000	0,000	0,000	0,000	0,000	0,000	0,000
Public Area - SW Pond	2024	Paving - Asphalt	Vendor/Material Hauling	0	0,000	0,000	0,000	0,000	0,000	0,000	0,000	0,000	0,000	0,000	0,000	0,000	0,000	0,000	0,000	0,000	0,000	0,000	0,000	0,000	0,000	0,000	0,000	0,000	0,000
Western Entrance	2024	Paving - Asphalt	Vendor/Material Hauling	0	0,000	0,000	0,000	0,000	0,000	0,000	0,000	0,000	0,000	0,000	0,000	0,000	0,000	0,000	0,000	0,000	0,000	0,000	0,000	0,000	0,000	0,000	0,000	0,000	0,000
Shared Site Utilities	2024	Paving - Asphalt	Vendor/Material Hauling	0	0,000	0,000	0,000	0,000	0,000	0,000	0,000	0,000	0,000	0,000	0,000	0,000	0,000	0,000	0,000	0,000	0,000	0,000	0,000	0,000	0,000	0,000	0,000	0,000	0,000
Compost Facility	2025	Paving - Asphalt	Vendor/Material Hauling	0	0,000	0,000	0,000	0,000	0,000	0,000	0,000	0,000	0,000	0,000	0,000	0,000	0,000	0,000	0,000	0,000	0,000	0,000	0,000	0,000	0,000	0,000	0,000	0,000	0,000
Compost Facility - SW Pond	2025	Paving - Asphalt	Vendor/Material Hauling	0	0,000	0,000	0,000	0,000	0,000	0,000	0,000	0,000	0,000	0,000	0,000	0,000	0,000	0,000	0,000	0,000	0,000	0,000	0,000	0,000	0,000	0,000	0,000	0,000	0,000
Landfill Construction3	2028	Paving - Asphalt	Vendor/Material Hauling	0	0,000	0,000	0,000	0,000	0,000	0,000	0,000	0,000	0,000	0,000	0,000	0,000	0,000	0,000	0,000	0,000	0,000	0,000	0,000	0,000	0,000	0,000	0,000	0,000	0,000
Landfill Lining & Partial Closure4	2029	Paving - Asphalt	Vendor/Material Hauling	0	0,000	0,000	0,000	0,000	0,000	0,000	0,000	0,000	0,000	0,000	0,000	0,000	0,000	0,000	0,000	0,000	0,000	0,000	0,000	0,000	0,000	0,000	0,000	0,000	0,000
Recovered Materials Storage	2029	Paving - Asphalt	Vendor/Material

WPWMA EIR
Construction Onroad Emissions
Plan Concept 1

Recovered Materials Storage	2029	Site Preparation - Pond	Vendor/Material Hauling	0	0,000	0,000	0,000	0,000	0,000	0,000	0,000	0,000	0,000	0,000	0,000	0,000	0,000	0,000	0,000	0,000	0,000	0,000	0,000	0,000	0,000	0,000	0,000	0,000	0,000
HHW Storage	2029	Site Preparation - Pond	Vendor/Material Hauling	0	0,000	0,000	0,000	0,000	0,000	0,000	0,000	0,000	0,000	0,000	0,000	0,000	0,000	0,000	0,000	0,000	0,000	0,000	0,000	0,000	0,000	0,000	0,000	0,000	0,000
Primary Maintenance Facility	2033	Site Preparation - Pond	Vendor/Material Hauling	0	0,000	0,000	0,000	0,000	0,000	0,000	0,000	0,000	0,000	0,000	0,000	0,000	0,000	0,000	0,000	0,000	0,000	0,000	0,000	0,000	0,000	0,000	0,000	0,000	0,000
Stockpile Relocation	2033	Site Preparation - Pond	Vendor/Material Hauling	0	0,000	0,000	0,000	0,000	0,000	0,000	0,000	0,000	0,000	0,000	0,000	0,000	0,000	0,000	0,000	0,000	0,000	0,000	0,000	0,000	0,000	0,000	0,000	0,000	0,000
Public Area	2024	Excavation	Vendor/Material Hauling	0	0,000	0,000	0,000	0,000	0,000	0,000	0,000	0,000	0,000	0,000	0,000	0,000	0,000	0,000	0,000	0,000	0,000	0,000	0,000	0,000	0,000	0,000	0,000	0,000	0,000
Public Area - SW Pond	2024	Excavation	Vendor/Material Hauling	0	0,000	0,000	0,000	0,000	0,000	0,000	0,000	0,000	0,000	0,000	0,000	0,000	0,000	0,000	0,000	0,000	0,000	0,000	0,000	0,000	0,000	0,000	0,000	0,000	0,000
Western Entrance	2024	Excavation	Vendor/Material Hauling	0	0,000	0,000	0,000	0,000	0,000	0,000	0,000	0,000	0,000	0,000	0,000	0,000	0,000	0,000	0,000	0,000	0,000	0,000	0,000	0,000	0,000	0,000	0,000	0,000	0,000
Shared Site Utilities	2024	Excavation	Vendor/Material Hauling	0	0,000	0,000	0,000	0,000	0,000	0,000	0,000	0,000	0,000	0,000	0,000	0,000	0,000	0,000	0,000	0,000	0,000	0,000	0,000	0,000	0,000	0,000	0,000	0,000	0,000
Compost Facility	2025	Excavation	Vendor/Material Hauling	0	0,000	0,000	0,000	0,000	0,000	0,000	0,000	0,000	0,000	0,000	0,000	0,000	0,000	0,000	0,000	0,000	0,000	0,000	0,000	0,000	0,000	0,000	0,000	0,000	0,000
Compost Facility - SW Pond	2025	Excavation	Vendor/Material Hauling	0	0,000	0,000	0,000	0,000	0,000	0,000	0,000	0,000	0,000	0,000	0,000	0,000	0,000	0,000	0,000	0,000	0,000	0,000	0,000	0,000	0,000	0,000	0,000	0,000	0,000
Landfill Construction3	2028	Excavation	Vendor/Material Hauling	0	0,000	0,000	0,000	0,000	0,000	0,000	0,000	0,000	0,000	0,000	0,000	0,000	0,000	0,000	0,000	0,000	0,000	0,000	0,000	0,000	0,000	0,000	0,000	0,000	0,000
Landfill Lining & Partial Closure4	2029	Excavation	Vendor/Material Hauling	0	0,000	0,000	0,000	0,000	0,000	0,000	0,000	0,000	0,000	0,000	0,000	0,000	0,000	0,000	0,000	0,000	0,000	0,000	0,000	0,000	0,000	0,000	0,000	0,000	0,000
Recovered Materials Storage	2029	Excavation	Vendor/Material Hauling	0	0,000	0,000	0,000	0,000	0,000	0,000	0,000	0,000	0,000	0,000	0,000	0,000	0,000	0,000	0,000	0,000	0,000	0,000	0,000	0,000	0,000	0,000	0,000	0,000	0,000
HHW Storage	2029	Excavation	Vendor/Material Hauling	0	0,000	0,000	0,000	0,000	0,000	0,000	0,000	0,000	0,000	0,000	0,000	0,000	0,000	0,000	0,000	0,000	0,000	0,000	0,000	0,000	0,000	0,000	0,000	0,000	0,000
Primary Maintenance Facility	2033	Excavation	Vendor/Material Hauling	0	0,000	0,000	0,000	0,000	0,000	0,000	0,000	0,000	0,000	0,000	0,000	0,000	0,000	0,000	0,000	0,000	0,000	0,000	0,000	0,000	0,000	0,000	0,000	0,000	0,000
Stockpile Relocation	2033	Excavation	Vendor/Material Hauling	0	0,000	0,000	0,000	0,000	0,000	0,000	0,000	0,000	0,000	0,000	0,000	0,000	0,000	0,000	0,000	0,000	0,000	0,000	0,000	0,000	0,000	0,000	0,000	0,000	0,000
Public Area	2024	Lining and Partial Closure	Vendor/Material Hauling	0	0,000	0,000	0,000	0,000	0,000	0,000	0,000	0,000	0,000	0,000	0,000	0,000	0,000	0,000	0,000	0,000	0,000	0,000	0,000	0,000	0,000	0,000	0,000	0,000	0,000
Public Area - SW Pond	2024	Lining and Partial Closure	Vendor/Material Hauling	0	0,000	0,000	0,000	0,000	0,000	0,000	0,000	0,000	0,000	0,000	0,000	0,000	0,000	0,000	0,000	0,000	0,000	0,000	0,000	0,000	0,000	0,000	0,000	0,000	0,000
Western Entrance	2024	Lining and Partial Closure	Vendor/Material Hauling	0	0,000	0,000	0,000	0,000	0,000	0,000	0,000	0,000	0,000	0,000	0,000	0,000	0,000	0,000	0,000	0,000	0,000	0,000	0,000	0,000	0,000	0,000	0,000	0,000	0,000
Shared Site Utilities	2024	Lining and Partial Closure	Vendor/Material Hauling	0	0,000	0,000	0,000	0,000	0,000	0,000	0,000	0,000	0,000	0,000	0,000	0,000	0,000	0,000	0,000	0,000	0,000	0,000	0,000	0,000	0,000	0,000	0,000	0,000	0,000
Compost Facility	2025	Lining and Partial Closure	Vendor/Material Hauling	0	0,000	0,000	0,000	0,000	0,000	0,000	0,000	0,000	0,000	0,000	0,000	0,000	0,000	0,000	0,000	0,000	0,000	0,000	0,000	0,000	0,000	0,000	0,000	0,000	0,000
Compost Facility - SW Pond	2025	Lining and Partial Closure	Vendor/Material Hauling	0	0,000	0,000	0,000	0,000	0,000	0,000	0,000	0,000	0,000	0,000	0,000	0,000	0,000	0,000	0,000	0,000	0,000	0,000	0,000	0,000	0,000	0,000	0,000	0,000	0,000
Landfill Construction3	2028	Lining and Partial Closure	Vendor/Material Hauling	0	0,000	0,000	0,000	0,000	0,000	0,000	0,000	0,000	0,000	0,000	0,000	0,000	0,000	0,000	0,000	0,000	0,000	0,000	0,000	0,000	0,000	0,000	0,000	0,000	0,000
Landfill Lining & Partial Closure4	2029	Lining and Partial Closure	Vendor/Material Hauling	0	0,000	0,000	0,000	0,000	0,000	0,000	0,000	0,000	0,000	0,000	0,000	0,000	0,000	0,000	0,000	0,000	0,000	0,000	0,000	0,000	0,000	0,000	0,000	0,000	0,000
Recovered Materials Storage	2029	Lining and Partial Closure	Vendor/Material Hauling	0	0,000	0,000	0,000	0,000	0,000	0,000	0,000	0,000	0,000	0,000	0,000	0,000	0,000	0,000	0,000	0,000	0,000	0,000	0,000	0,000	0,000	0,000	0,000	0,000	0,000
HHW Storage	2029	Lining and Partial Closure	Vendor/Material Hauling	0	0,000	0,000	0,000	0,000	0,000	0,000	0,000	0,000	0,000	0,000	0,000	0,000	0,000	0,000	0,000	0,000	0,000	0,000	0,000	0,000	0,000	0,000	0,000	0,000	0,000
Primary Maintenance Facility	2033	Lining and Partial Closure	Vendor/Material Hauling	0	0,000	0,000	0,000	0,000	0,000	0,000	0,000	0,000	0,000	0,000	0,000	0,000	0,000	0,000	0,000	0,000	0,000	0,000	0,000	0,000	0,000	0,000	0,000	0,000	0,000
Stockpile Relocation	2033	Lining and Partial Closure	Vendor/Material Hauling	0	0,000	0,000	0,000	0,000	0,000	0,000	0,000	0,000	0,000	0,000	0,000	0,000	0,000	0,000	0,000	0,000	0,000	0,000	0,000	0,000	0,000	0,000	0,000	0,000	0,000
Public Area	2024	Stockpile Movement	Vendor/Material Hauling	0	0,000	0,000	0,000	0,000	0,000	0,000	0,000	0,000	0,000	0,000	0,000	0,000	0,000	0,000	0,000	0,000	0,000	0,000	0,000	0,000	0,000	0,000	0,000	0,000	0,000
Public Area - SW Pond	2024	Stockpile Movement	Vendor/Material Hauling	0	0,000	0,000	0,000	0,000	0,000	0,000	0,000	0,000	0,000	0,000	0,000	0,000	0,000	0,000	0,000	0,000	0,000	0,000	0,000	0,000	0,000	0,000	0,000	0,000	0,000
Western Entrance	2024	Stockpile Movement	Vendor/Material Hauling	0	0,000	0,000	0,000	0,000	0,000	0,000	0,000	0,000	0,000	0,000	0,000	0,000	0,000	0,000	0,000	0,000	0,000	0,000	0,000	0,000	0,000	0,000	0,000	0,000	0,000
Shared Site Utilities	2024	Stockpile Movement	Vendor/Material Hauling	0	0,000	0,000	0,000	0,000	0,000	0,000	0,000	0,000	0,000	0,000	0,000	0,000	0,000	0,000	0,000	0,000	0,000	0,000	0,000	0,000	0,000	0,000	0,000	0,000	0,000
Compost Facility	2025	Stockpile Movement	Vendor/Material Hauling	0	0,000	0,000	0,000	0,000	0,000	0,000	0,000	0,000	0,000	0,000	0,000	0,000	0,000	0,000	0,000	0,000	0,000	0,000	0,000	0,000	0,000	0,000	0,000	0,000	0,000
Compost Facility - SW Pond	2025	Stockpile Movement	Vendor/Material Hauling	0	0,000	0,000	0,000	0,000	0,000	0,000	0,000	0,000	0,000	0,000	0,000	0,000	0,000	0,000	0,000	0,000	0,000	0,000	0,000	0,000	0,000	0,000	0,000	0,000	0,000
Landfill Construction3	2028	Stockpile Movement	Vendor/Material Hauling	0	0,000	0,000	0,000	0,000	0,000	0,000	0,000	0,000	0,000	0,000	0,000	0,000	0,000	0,000	0,000	0,000	0,000	0,000	0,000	0,000	0,000	0,000	0,000	0,000	0,000
Landfill Lining & Partial Closure4	2029	Stockpile Movement	Vendor/Material Hauling	0	0,000	0,000	0,000	0,000	0,000	0,000	0,000	0,000	0,000	0,000	0,000	0,000	0,000	0,000	0,000	0,000	0,000	0,000	0,000	0,000	0,000	0,000	0,000	0,000	0,000
Recovered Materials Storage	2029	Stockpile Movement	Vendor/Material Hauling	0	0,000	0,000	0,000	0,000	0,000	0,000	0,000	0,000	0,000	0,000	0,000	0,000	0,000	0,000	0,000	0,000	0,000	0,000	0,000	0,000	0,000	0,000	0,000	0,000	0,000
HHW Storage	2029	Stockpile Movement	Vendor/Material Hauling	0	0,000	0,000	0,000	0,000	0,000	0,000	0,000	0,000	0,000	0,000	0,000	0,000	0,000	0,000	0,000	0,000	0,000	0,000	0,000	0,000	0,000	0,000	0,000	0,000	0,000
Primary Maintenance Facility	2033	Stockpile Movement	Vendor/Material Hauling	0	0,000	0,000	0,000	0,000	0,000	0,000	0,000	0,000	0,000	0,000	0,000	0,000	0,000	0,000	0,000	0,000	0,000	0,000	0,000	0,000	0,000	0,000	0,000	0,000	0,000
Stockpile Relocation	2033	Stockpile Movement	Vendor/Material Hauling	0	0,000	0,000	0,000	0,000	0,000	0,000	0,000	0,000	0,000	0,000	0,000	0,000	0,000	0,000	0,000	0,000	0,000	0,000	0,000	0,000	0,000	0,000	0,000	0,000	0,000

Notes:

[1] The following conversion factors were used to estimate emissions:

1 lb = 453,6 g

WPWMA EIR
Construction Onroad Emissions
Plan Concept 1

Maximum On-Road Vehicle Daily Emissions across all construction phases

				Maximum Daily Emissions (lb/day) - across all construction phases												Maximum Daily Emissions (lb/day) - across all construction phases									
				Exhaust Emissions (lbs/day)										Fugitive Emissions (lbs/day)		Total Emissions (lbs/day)									
Element	**Year**		**Vehicle Type**	**TOG**	**ROG**	**CO**	**NO_X**	**SO_X**	**PM_{10}**	**$PM_{2.5}$**	**CO_2**	**CH_4**	**N_2O**	**PM_{10}**	**$PM_{2.5}$**	**TOG**	**ROG**	**CO**	**NO_X**	**SO_X**	**PM_{10}**	**$PM_{2.5}$**	**CO_2**	**CH_4**	**N_2O**
Public Area	2024		Worker Commute	0,000	0,000	0,000	0,000	0,000	0,000	0,000	0,000	0,000	0,000	0,000	0,000	0,000	0,000	0,000	0,000	0,000	0,000	0,000	0,000	0,000	0,000
Public Area - SW Pond	2024		Worker Commute	0,000	0,000	0,000	0,000	0,000	0,000	0,000	0,000	0,000	0,000	0,000	0,000	0,000	0,000	0,000	0,000	0,000	0,000	0,000	0,000	0,000	0,000
Western Entrance	2024		Worker Commute	0,000	0,000	0,000	0,000	0,000	0,000	0,000	0,000	0,000	0,000	0,000	0,000	0,000	0,000	0,000	0,000	0,000	0,000	0,000	0,000	0,000	0,000
Shared Site Utilities	2024		Worker Commute	0,000	0,000	0,000	0,000	0,000	0,000	0,000	0,000	0,000	0,000	0,000	0,000	0,000	0,000	0,000	0,000	0,000	0,000	0,000	0,000	0,000	0,000
Compost Facility	2025		Worker Commute	0,000	0,000	0,000	0,000	0,000	0,000	0,000	0,000	0,000	0,000	0,000	0,000	0,000	0,000	0,000	0,000	0,000	0,000	0,000	0,000	0,000	0,000
Compost Facility - SW Pond	2025		Worker Commute	0,000	0,000	0,000	0,000	0,000	0,000	0,000	0,000	0,000	0,000	0,000	0,000	0,000	0,000	0,000	0,000	0,000	0,000	0,000	0,000	0,000	0,000
Landfill Construction3	2028		Worker Commute	0,000	0,000	0,000	0,000	0,000	0,000	0,000	0,000	0,000	0,000	0,000	0,000	0,000	0,000	0,000	0,000	0,000	0,000	0,000	0,000	0,000	0,000
Landfill Lining & Partial Closure4	2029		Worker Commute	0,000	0,000	0,000	0,000	0,000	0,000	0,000	0,000	0,000	0,000	0,000	0,000	0,000	0,000	0,000	0,000	0,000	0,000	0,000	0,000	0,000	0,000
Recovered Materials Storage	2029		Worker Commute	0,000	0,000	0,000	0,000	0,000	0,000	0,000	0,000	0,000	0,000	0,000	0,000	0,000	0,000	0,000	0,000	0,000	0,000	0,000	0,000	0,000	0,000
HHW Storage	2029		Worker Commute	0,000	0,000	0,000	0,000	0,000	0,000	0,000	0,000	0,000	0,000	0,000	0,000	0,000	0,000	0,000	0,000	0,000	0,000	0,000	0,000	0,000	0,000
Primary Maintenance Facility	2033		Worker Commute	0,000	0,000	0,000	0,000	0,000	0,000	0,000	0,000	0,000	0,000	0,000	0,000	0,000	0,000	0,000	0,000	0,000	0,000	0,000	0,000	0,000	0,000
Stockpile Relocation	2033		Worker Commute	0,000	0,000	0,000	0,000	0,000	0,000	0,000	0,000	0,000	0,000	0,000	0,000	0,000	0,000	0,000	0,000	0,000	0,000	0,000	0,000	0,000	0,000
Public Area	2024		Vendor/Material Hauling	0,000	0,000	0,000	0,000	0,000	0,000	0,000	0,000	0,000	0,000	0,000	0,000	0,000	0,000	0,000	0,000	0,000	0,000	0,000	0,000	0,000	0,000
Public Area - SW Pond	2024		Vendor/Material Hauling	0,000	0,000	0,000	0,000	0,000	0,000	0,000	0,000	0,000	0,000	0,000	0,000	0,000	0,000	0,000	0,000	0,000	0,000	0,000	0,000	0,000	0,000
Western Entrance	2024		Vendor/Material Hauling	0,000	0,000	0,000	0,000	0,000	0,000	0,000	0,000	0,000	0,000	0,000	0,000	0,000	0,000	0,000	0,000	0,000	0,000	0,000	0,000	0,000	0,000
Shared Site Utilities	2024		Vendor/Material Hauling	0,000	0,000	0,000	0,000	0,000	0,000	0,000	0,000	0,000	0,000	0,000	0,000	0,000	0,000	0,000	0,000	0,000	0,000	0,000	0,000	0,000	0,000
Compost Facility	2025		Vendor/Material Hauling	0,000	0,000	0,000	0,000	0,000	0,000	0,000	0,000	0,000	0,000	0,000	0,000	0,000	0,000	0,000	0,000	0,000	0,000	0,000	0,000	0,000	0,000
Compost Facility - SW Pond	2025		Vendor/Material Hauling	0,000	0,000	0,000	0,000	0,000	0,000	0,000	0,000	0,000	0,000	0,000	0,000	0,000	0,000	0,000	0,000	0,000	0,000	0,000	0,000	0,000	0,000
Landfill Construction3	2028		Vendor/Material Hauling	0,000	0,000	0,000	0,000	0,000	0,000	0,000	0,000	0,000	0,000	0,000	0,000	0,000	0,000	0,000	0,000	0,000	0,000	0,000	0,000	0,000	0,000
Landfill Lining & Partial Closure4	2029		Vendor/Material Hauling	0,000	0,000	0,000	0,000	0,000	0,000	0,000	0,000	0,000	0,000	0,000	0,000	0,000	0,000	0,000	0,000	0,000	0,000	0,000	0,000	0,000	0,000
Recovered Materials Storage	2029		Vendor/Material Hauling	0,000	0,000	0,000	0,000	0,000	0,000	0,000	0,000	0,000	0,000	0,000	0,000	0,000	0,000	0,000	0,000	0,000	0,000	0,000	0,000	0,000	0,000
HHW Storage	2029		Vendor/Material Hauling	0,000	0,000	0,000	0,000	0,000	0,000	0,000	0,000	0,000	0,000	0,000	0,000	0,000	0,000	0,000	0,000	0,000	0,000	0,000	0,000	0,000	0,000
Primary Maintenance Facility	2033		Vendor/Material Hauling	0,000	0,000	0,000	0,000	0,000	0,000	0,000	0,000	0,000	0,000	0,000	0,000	0,000	0,000	0,000	0,000	0,000	0,000	0,000	0,000	0,000	0,000
Stockpile Relocation	2033		Vendor/Material Hauling	0,000	0,000	0,000	0,000	0,000	0,000	0,000	0,000	0,000	0,000	0,000	0,000	0,000	0,000	0,000	0,000	0,000	0,000	0,000	0,000	0,000	0,000

Note: Assumes element and associated stormwater pond are built concurrently (excavation is associated with pond construction), as opposed to sequentially.

Total Maximum On-Road Vehicle Daily Emissions across all construction phases (worker commute + vendor/material hauling)

			Maximum Daily Emissions (lb/day) - across all construction phases												Maximum Daily Emissions (lb/day) - across all construction phases									
			Exhaust Emissions (lbs/day)										Fugitive Emissions		Total Emissions (lbs/day)									
Element	**Year**		**TOG**	**ROG**	**CO**	**NO_X**	**SO_X**	**PM_{10}**	**$PM_{2.5}$**	**CO_2**	**CH_4**	**N_2O**	**PM_{10}**	**$PM_{2.5}$**	**TOG**	**ROG**	**CO**	**NO_X**	**SO_X**	**PM_{10}**	**$PM_{2.5}$**	**CO_2**	**CH_4**	**N_2O**
Public Area	2024		0,000	0,000	0,000	0,000	0,000	0,000	0,000	0,000	0,000	0,000	0,000	0,000	0,000	0,000	0,000	0,000	0,000	0,000	0,000	0,000	0,000	0,000
Public Area - SW Pond	2024		0,000	0,000	0,000	0,000	0,000	0,000	0,000	0,000	0,000	0,000	0,000	0,000	0,000	0,000	0,000	0,000	0,000	0,000	0,000	0,000	0,000	0,000
Western Entrance	2024		0,000	0,000	0,000	0,000	0,000	0,000	0,000	0,000	0,000	0,000	0,000	0,000	0,000	0,000	0,000	0,000	0,000	0,000	0,000	0,000	0,000	0,000
Shared Site Utilities	2024		0,000	0,000	0,000	0,000	0,000	0,000	0,000	0,000	0,000	0,000	0,000	0,000	0,000	0,000	0,000	0,000	0,000	0,000	0,000	0,000	0,000	0,000
Compost Facility	2025		0,000	0,000	0,000	0,000	0,000	0,000	0,000	0,000	0,000	0,000	0,000	0,000	0,000	0,000	0,000	0,000	0,000	0,000	0,000	0,000	0,000	0,000
Compost Facility - SW Pond	2025		0,000	0,000	0,000	0,000	0,000	0,000	0,000	0,000	0,000	0,000	0,000	0,000	0,000	0,000	0,000	0,000	0,000	0,000	0,000	0,000	0,000	0,000
Landfill Construction3	2028		0,000	0,000	0,000	0,000	0,000	0,000	0,000	0,000	0,000	0,000	0,000	0,000	0,000	0,000	0,000	0,000	0,000	0,000	0,000	0,000	0,000	0,000
Landfill Lining & Partial Closure4	2029		0,000	0,000	0,000	0,000	0,000	0,000	0,000	0,000	0,000	0,000	0,000	0,000	0,000	0,000	0,000	0,000	0,000	0,000	0,000	0,000	0,000	0,000
Recovered Materials Storage	2029		0,000	0,000	0,000	0,000	0,000	0,000	0,000	0,000	0,000	0,000	0,000	0,000	0,000	0,000	0,000	0,000	0,000	0,000	0,000	0,000	0,000	0,000
HHW Storage	2029		0,000	0,000	0,000	0,000	0,000	0,000	0,000	0,000	0,000	0,000	0,000	0,000	0,000	0,000	0,000	0,000	0,000	0,000	0,000	0,000	0,000	0,000
Primary Maintenance Facility	2033		0,000	0,000	0,000	0,000	0,000	0,000	0,000	0,000	0,000	0,000	0,000	0,000	0,000	0,000	0,000	0,000	0,000	0,000	0,000	0,000	0,000	0,000
Stockpile Relocation	2033		0,000	0,000	0,000	0,000	0,000	0,000	0,000	0,000	0,000	0,000	0,000	0,000	0,000	0,000	0,000	0,000	0,000	0,000	0,000	0,000	0,000	0,000

Maximum Daily On-Road Vehicle Emissions per Construction Year

		Maximum Daily Emissions (lb/day) - across all construction phases												Maximum Daily Emissions (lb/day) - across all construction phases									
		Exhaust Emissions (lbs/day)										Fugitive Emissions		Total Emissions (lbs/day)									
Year		**TOG**	**ROG**	**CO**	**NO_X**	**SO_X**	**PM_{10}**	**$PM_{2.5}$**	**CO_2**	**CH_4**	**N_2O**	**PM_{10}**	**$PM_{2.5}$**	**TOG**	**ROG**	**CO**	**NO_X**	**SO_X**	**PM_{10}**	**$PM_{2.5}$**	**CO_2**	**CH_4**	**N_2O**
2024		0,000	0,000	0,000	0,000	0,000	0,000	0,000	0,000	0,000	0,000	0,000	0,000	0,000	0,000	0,000	0,000	0,000	0,000	0,000	0,000	0,000	0,000
2025		0,000	0,000	0,000	0,000	0,000	0,000	0,000	0,000	0,000	0,000	0,000	0,000	0,000	0,000	0,000	0,000	0,000	0,000	0,000	0,000	0,000	0,000
2028		0,000	0,000	0,000	0,000	0,000	0,000	0,000	0,000	0,000	0,000	0,000	0,000	0,000	0,000	0,000	0,000	0,000	0,000	0,000	0,000	0,000	0,000
2029		0,000	0,000	0,000	0,000	0,000	0,000	0,000	0,000	0,000	0,000	0,000	0,000	0,000	0,000	0,000	0,000	0,000	0,000	0,000	0,000	0,000	0,000
2033		0,000	0,000	0,000	0,000	0,000	0,000	0,000	0,000	0,000	0,000	0,000	0,000	0,000	0,000	0,000	0,000	0,000	0,000	0,000	0,000	0,000	0,000

Total Annual GHG (lb/yr)

Year	CO2	CH4	N_2O
2024	0	0,00	0,00
2025	0	0,00	0,00
2028	0	0,00	0,00
2029	0	0,00	0,00
2033	0	0,00	0,00

WPWMA EIR
Construction Onroad Emissions
Plan Concept 2

= manual input

Worker Commute Vehicle Miles Traveled (VMT)

		Number of Equipment per Phase									
Element	**Year**	**Demolition**	**Site Preparation**	**Grading**	**Building Construction**	**Paving - Asphalt**	**Paving - Concrete**	**Site Preparation - Pond**	**Excavation**	**Lining and Partial Closure**	**Stockpile Movement**
Main Entrance	2024	4	3	3	0	5	7	0	0	N/A	N/A
New SW Ponds	2024	0	0	0	0	0	0	7	4	N/A	N/A
Unlined Area Excavation (1 of 3)	2024	0	7	0	0	0	0	0	16	N/A	N/A
Stockpile Relocation	2024	0	0	0	0	0	0	0	0	N/A	5
Public Area	2026	6	7	8	7	8	5	N/A	N/A	N/A	N/A
Public Area - SW Pond	2026	N/A	N/A	N/A	N/A	N/A	N/A	3	4	N/A	N/A
Unlined Area Excavation (3 of 3)	2026	0	7	0	0	0	0	0	16	N/A	N/A
Landfill Construction[3]	2031	0	7	8	0	0	0	0	24	N/A	N/A
Landfill Lining & Partial Closure[4]	2032	0	0	0	0	0	0	0	4	44	N/A
Admin Building	2032	0	2	4	5	7	7	0	0	N/A	N/A
Recovered Materials Storage	2032	0	3	3	7	7	5	0	0	N/A	N/A
Shared Site Utilities	2032	0	2	4	0	0	0	0	4	N/A	N/A

1,25 = Number of Construction Workers per Construction Equipment

21,6 = Placer County APCD Urban Roundtrip H-W Distance (miles)

Worker Commute Vehicle Miles Traveled (VMT)

		Number of Construction Workers (also equivalent to Worker Commute Roundtrips) per Day[1]										Construction Worker Commute Vehicle Miles Traveled (VMT) per Day[2]									
Element	**Year**	**Demolition**	**Site Preparation**	**Grading**	**Building Construction[1]**	**Paving - Asphalt**	**Paving - Concrete**	**Site Preparation - Pond**	**Excavation**	**Lining and Partial Closure**	**Stockpile Movement**	**Demolition**	**Site Preparation**	**Grading**	**Building Construction**	**Paving - Asphalt**	**Paving - Concrete**	**Site Preparation - Pond**	**Excavation**	**Lining and Partial Closure**	**Stockpile Movement**
Main Entrance	2024	5	4	4	0	6	9	0	0	0	0	108	86	86	0	130	194	0	0	0	0
New SW Ponds	2024	0	0	0	0	0	0	9	5	0	0	0	0	0	0	0	0	194	108	0	0
Unlined Area Excavation (1 of 3)	2024	0	9	0	0	0	0	0	20	0	0	0	194	0	0	0	0	0	432	0	0
Stockpile Relocation	2024	0	0	0	0	0	0	0	0	0	6	0	0	0	0	0	0	0	0	0	130
Public Area	2026	8	9	10	23	10	6	0	0	0	0	173	194	216	491	216	130	0	0	0	0
Public Area - SW Pond	2026	0	0	0	0	0	0	4	5	0	0	0	0	0	0	0	0	86	108	0	0
Unlined Area Excavation (3 of 3)	2026	0	9	0	0	0	0	0	20	0	0	0	194	0	0	0	0	0	432	0	0
Landfill Construction[3]	2031	0	9	10	0	0	0	0	20	0	0	0	194	216	0	0	0	0	432	0	0
Landfill Lining & Partial Closure[4]	2032	0	0	0	0	0	0	0	5	35	0	0	0	0	0	0	0	0	108	756	0
Admin Building	2032	0	3	5	4	9	9	0	0	0	0	0	65	108	91	194	194	0	0	0	0
Recovered Materials Storage	2032	0	4	4	29	9	6	0	0	0	0	0	86	86	635	194	130	0	0	0	0
Shared Site Utilities	2032	0	3	5	0	0	0	0	5	0	0	0	65	108	0	0	0	0	108	0	0

Notes:
[1] Number of Construction Workers is based on CalEEMod Appendix A assumption of 1.25 workers per equipment and 1 roundtrip per worker per day. Except for Building Construction, which is based on CalEEMod Appendix A assumption of 0.42 Daily Worker Trip Rate per 1,000 sq ft of building.
[2] VMT per day based on CalEEMod Appendix D urban roundtrip distance for Placer County APCD H-W (Home - Work).
[3] Landfill Construction Excavation construction workers based on information provided by WPWMA (20 workers per module).
[4] Landfill Lining & Partial Closure construction workers based on information provided by WPWMA (35 workers per lining/partial closure event).

Vendor/Material Hauling Vehicle Miles Traveled (VMT)

		Imported Material (cy)										Duration of Construction Phase (days)									
Element	**Year**	**Demolition**	**Site Preparation**	**Grading**	**Building Construction**	**Paving - Asphalt**	**Paving - Concrete**	**Site Preparation - Pond**	**Excavation**	**Lining and Partial Closure**	**Stockpile Movement**	**Demolition**	**Site Preparation**	**Grading**	**Building Construction**	**Paving - Asphalt**	**Paving - Concrete**	**Site Preparation - Pond**	**Excavation**	**Lining and Partial Closure**	**Stockpile Movement**
Main Entrance	2024	N/A	0	0	see next table	1 500	375	0	0	N/A	N/A	20	3	6	0	10	10	0	0	N/A	N/A
New SW Ponds	2024	N/A	0	0	see next table	0	0	0	0	N/A	N/A	0	0	0	0	0	0	10	10	N/A	N/A
Unlined Area Excavation (1 of 3)	2024	N/A	0	0	see next table	0	0	0	0	N/A	N/A	0	10	0	0	0	0	0	116	N/A	N/A
Stockpile Relocation	2024	N/A	0	0	see next table	0	0	0	0	N/A	N/A	0	0	0	0	0	0	0	0	N/A	260
Public Area	2026	N/A	0	0	see next table	9 883	1 503	N/A	N/A	N/A	N/A	20	10	30	220	20	10	N/A	N/A	N/A	N/A
Public Area - SW Pond	2026	N/A	N/A	N/A	see next table	N/A	N/A	0	0	N/A	N/A	N/A	N/A	N/A	N/A	N/A	N/A	3	1	N/A	N/A
Unlined Area Excavation (3 of 3)	2026	N/A	0	0	see next table	0	0	0	0	N/A	N/A	0	10	0	0	0	0	0	116	N/A	N/A
Landfill Construction3	2031	N/A	0	0	see next table	0	0	0	0	N/A	N/A	0	10	30	0	0	0	0	175	N/A	N/A
Landfill Lining & Partial Closure4	2032	N/A	0	0	see next table	0	0	0	0	N/A	N/A	0	0	0	0	0	0	0	13	175	N/A
Admin Building	2032	N/A	0	0	see next table	694	278	0	0	N/A	N/A	0	2	4	200	10	10	0	0	N/A	N/A
Recovered Materials Storage	2032	N/A	0	0	see next table	163	1 944	0	0	N/A	N/A	0	3	6	220	10	10	0	0	N/A	N/A
Shared Site Utilities	2032	N/A	0	0	see next table	0	0	0	0	N/A	N/A	0	2	4	0	0	0	0	1	N/A	N/A

16 = Load Capacity per Haul Truck (cy)

14,6 = Placer County APCD Urban Roundtrip C-C Distance (miles)

Vendor/Material Hauling Vehicle Miles Traveled (VMT)

		Number of Vendor/Haul Vehicle Roundtrips per Day[1]										Vendor/Haul Vehicle Miles Traveled (VMT) per Day[2]									
Element	**Year**	**Demolition**	**Site Preparation**	**Grading**	**Building Construction[3]**	**Paving - Asphalt**	**Paving - Concrete**	**Site Preparation - Pond**	**Excavation**	**Lining and Partial Closure**	**Stockpile Movement**	**Demolition**	**Site Preparation**	**Grading**	**Building Construction**	**Paving - Asphalt**	**Paving - Concrete**	**Site Preparation - Pond**	**Excavation**	**Lining and Partial Closure**	**Stockpile Movement**
Main Entrance	2024	0	0	0	0	9	2	0	0	0	0	0	0	0	0	131	29	0	0	0	0
New SW Ponds	2024	0	0	0	0	0	0	0	0	0	0	0	0	0	0	0	0	0	0	0	0
Unlined Area Excavation (1 of 3)	2024	0	0	0	0	0	0	0	0	0	0	0	0	0	0	0	0	0	0	0	0
Stockpile Relocation	2024	0	0	0	0	0	0	0	0	0	0	0	0	0	0	0	0	0	0	0	0
Public Area	2026	0	0	0	9	31	9	0	0	0	0	0	0	0	129	453	131	0	0	0	0
Public Area - SW Pond	2026	0	0	0	0	0	0	0	0	0	0	0	0	0	0	0	0	0	0	0	0
Unlined Area Excavation (3 of 3)	2026	0	0	0	0	0	0	0	0	0	0	0	0	0	0	0	0	0	0	0	0
Landfill Construction3	2031	0	0	0	0	0	0	0	0	0	0	0	0	0	0	0	0	0	0	0	0
Landfill Lining & Partial Closure4	2032	0	0	0	0	0	0	0	0	0	0	0	0	0	0	0	0	0	0	0	0
Admin Building	2032	0	0	0	2	4	2	0	0	0	0	0	0	0	24	58	29	0	0	0	0
Recovered Materials Storage	2032	0	0	0	11	1	12	0	0	0	0	0	0	0	168	15	175	0	0	0	0
Shared Site Utilities	2032	0	0	0	0	0	0	0	0	0	0	0	0	0	0	0	0	0	0	0	0

Notes:
[1] Haul truck load capacity of 16 cy per CalEEMod Appendix A.
[2] VMT per day based on CalEEMod Appendix D urban roundtrip distance for Placer County APCD C-C (Commercial - Customer).
[3] Building Construction Number of Vendor/Haul Vehicle Roundtrips is based on CalEEMod Appendix A assumption of 0.1639 Daily Vendor Trip Rate per 1,000 sq ft of building.

WPWMA EIR
Construction Onroad Emissions
Plan Concept 2
Building Construction Workers & Vendor Trips

Element	Year	Building Size (sq ft)	Construction Worker Roundtrips per Day	Vendor Roundtrips per Day[2]
Main Entrance	2024	0	0	0
New SW Ponds	2024		0	0
Unlined Area Excavation (1 of 3)	2024		0	0
Stockpile Relocation	2024		0	0
Public Area	2026	54 100	23	9
Public Area - SW Pond	2026		0	0
Unlined Area Excavation (3 of 3)	2026		0	0
Landfill Construction3	2031		0	0
Landfill Lining & Partial Closure4	2032		0	0
Admin Building	2032	10 000	4	2
Recovered Materials Storage	2032	70 000	29	11
Shared Site Utilities	2032		0	0

Note:
[1] Construction Worker Roundtrips based on CalEEMod Appendix A assumption of 0.42 daily worker trips per day per 1,000 sq ft of building.
[2] Vendor Roundtrips based on CalEEMod Appendix A assumption of 0.1639 vendor trips per day per 1,000 sq ft of building.

Worker Commute Vehicle Mix

Vehicle Type	Percent[1]
Light Duty Auto (LDA), Gasoline	50%
Light-Duty Truck Type 1 (LDT1), Gasoline	25%
Light-Duty Truck Type 2 (LDT2), Gasoline	25%

Note:
[1] Assumed worker commute vehicle mix per CalEEMod Appendix A.

Vendor/Haul Vehicle Mix

Vehicle Type	Percent[1]
Medium Heavy-Duty Truck (MHDT), Diesel	0%
Heavy Heavy-Duty Truck (HHDT), Diesel	100%

Note:
[1] Assumed vendor/haul vehicle mix per CalEEMod Appendix A.

Derivation of Paved Road Fugitive Emission Factors

Parameter	PM_{10}	$PM_{2.5}$
Average Weight [a]	2,4	2,4
k [b]	1	0,25
sL [a]	0,1	0,1
Emission Factor (g/mile) [c]	**0,300**	**0,075**

Notes:
[a] Average Weight and sL taken as the default value from CalEEMod.
[b] k taken from Table 13.2.1-1 of Section 13.2.1 of *AP-42* (USEPA, 2011).

[c] Emission factor calculated using Equation 1 from Section 13.2.1 of *AP-42* (USEPA, 2011), which is generally consistent with Section 5.3 of Appendix A of the *CalEEMod User's Guide* (Breeze Software, 2017):

Emission Factor (g/mile) = k (g/mile) x [sL (g/m^2)]$^{0.91}$ x [Average Weight (tons)]$^{1.02}$

Derivation of Unpaved Road Fugitive Emission Factors

Parameter	PM_{10}	$PM_{2.5}$
Mean Vehicle Weight [a]	16,5	16,5
Silt Content [b]	8,5	8,5
k [c]	1,50	0,15
a [c]	0,9	0,9
b [c]	0,45	0,45
P [d]	74	74
Emission Factor (g/mile) [e]	**856,528**	**85,653**

Notes:
[a] Mean vehicle weight assumes that heavy- and light-duty trucks weigh an average of 16.5 tons.
[b] Silt content taken from Table 13.2.2-1 of Section 13.2.2 of *AP-42* (USEPA, 2006) for a Construction Site, Scraper Route; this value is consistent with the CalEEMod defaults.

[c] k, a, and b taken from Table 13.2.2-2 of Section 13.2.2 of *AP-42* (USEPA, 2006) for industrial roads.

[d] P (days of precipitation) taken as the CalEEMod default for the Placer-Sacramento County climate region. Taken from Table 1.1 of Appendix D of the *CalEEMod User's Guide* (Breeze Software, 2017).
[e] Emission factor calculated using Equations 1a and 2 from Section 13.2.2 of *AP-42* (USEPA, 2006):
Emission Factor (g/mile) = {k (lbs/mile) x [Silt Content (%) / 12]^{a} x [Mean Vehicle Weight (tons) / 3]^{b}} x [(365-P) / 365] x 453.6 (g/lb)

WPWMA EIR
Construction Onroad Emissions
Plan Concept 2
Vehicle Exhaust Emission Factors

Vehicle Class	Calendar Year	Exhaust Emission Factors (g/mile) [a] TOG	ROG	CO	NO_x	SO_x	PM_{10}	$PM_{2.5}$	CO_2	CH_4	N_2O
Light Duty Auto (LDA), Gasoline	2024	7,64E-03	5,23E-03	5,32E-01	2,58E-02	2,15E-03	4,58E-02	1,88E-02	2,14E+02	1,80E-03	3,78E-03
Light Duty Auto (LDA), Gasoline	2025	6,75E-03	4,62E-03	5,06E-01	2,36E-02	2,08E-03	4,58E-02	1,87E-02	2,08E+02	1,62E-03	3,59E-03
Light Duty Auto (LDA), Gasoline	2026	6,01E-03	4,12E-03	4,84E-01	2,19E-02	2,03E-03	4,58E-02	1,87E-02	2,02E+02	1,47E-03	3,43E-03
Light Duty Auto (LDA), Gasoline	2028	4,89E-03	3,35E-03	4,51E-01	1,95E-02	1,93E-03	4,56E-02	1,86E-02	1,93E+02	1,24E-03	3,21E-03
Light Duty Auto (LDA), Gasoline	2029	4,46E-03	3,06E-03	4,38E-01	1,86E-02	1,89E-03	4,56E-02	1,85E-02	1,89E+02	1,15E-03	3,13E-03
Light Duty Auto (LDA), Gasoline	2031	3,78E-03	2,59E-03	4,18E-01	1,74E-02	1,82E-03	4,55E-02	1,84E-02	1,82E+02	1,01E-03	3,03E-03
Light Duty Auto (LDA), Gasoline	2032	3,50E-03	2,40E-03	4,10E-01	1,69E-02	1,80E-03	4,54E-02	1,84E-02	1,79E+02	9,50E-04	2,99E-03
Light Duty Auto (LDA), Gasoline	2033	3,27E-03	2,24E-03	4,04E-01	1,66E-02	1,78E-03	4,54E-02	1,83E-02	1,77E+02	9,00E-04	2,96E-03
Light-Duty Truck Type 1 (LDT1), Gasoline	2024	1,35E-02	9,26E-03	6,94E-01	4,31E-02	2,51E-03	4,60E-02	1,89E-02	2,50E+02	2,77E-03	5,12E-03
Light-Duty Truck Type 1 (LDT1), Gasoline	2025	1,16E-02	7,95E-03	6,41E-01	3,80E-02	2,44E-03	4,60E-02	1,89E-02	2,43E+02	2,43E-03	4,72E-03
Light-Duty Truck Type 1 (LDT1), Gasoline	2026	1,00E-02	6,88E-03	5,97E-01	3,40E-02	2,38E-03	4,59E-02	1,88E-02	2,37E+02	2,16E-03	4,40E-03
Light-Duty Truck Type 1 (LDT1), Gasoline	2028	7,65E-03	5,24E-03	5,29E-01	2,79E-02	2,27E-03	4,57E-02	1,87E-02	2,26E+02	1,72E-03	3,91E-03
Light-Duty Truck Type 1 (LDT1), Gasoline	2029	6,71E-03	4,60E-03	5,02E-01	2,56E-02	2,22E-03	4,57E-02	1,86E-02	2,22E+02	1,55E-03	3,73E-03
Light-Duty Truck Type 1 (LDT1), Gasoline	2031	5,23E-03	3,58E-03	4,60E-01	2,18E-02	2,15E-03	4,56E-02	1,85E-02	2,14E+02	1,28E-03	3,44E-03
Light-Duty Truck Type 1 (LDT1), Gasoline	2032	4,67E-03	3,20E-03	4,44E-01	2,05E-02	2,11E-03	4,55E-02	1,84E-02	2,11E+02	1,17E-03	3,33E-03
Light-Duty Truck Type 1 (LDT1), Gasoline	2033	4,19E-03	2,87E-03	4,31E-01	1,94E-02	2,09E-03	4,55E-02	1,84E-02	2,08E+02	1,08E-03	3,25E-03
Light-Duty Truck Type 2 (LDT2), Gasoline	2024	1,06E-02	7,28E-03	6,35E-01	3,87E-02	2,68E-03	4,59E-02	1,88E-02	2,68E+02	2,44E-03	4,83E-03
Light-Duty Truck Type 2 (LDT2), Gasoline	2025	9,51E-03	6,52E-03	6,03E-01	3,46E-02	2,59E-03	4,58E-02	1,87E-02	2,59E+02	2,23E-03	4,49E-03
Light-Duty Truck Type 2 (LDT2), Gasoline	2026	8,56E-03	5,87E-03	5,77E-01	3,13E-02	2,51E-03	4,58E-02	1,87E-02	2,51E+02	2,04E-03	4,20E-03
Light-Duty Truck Type 2 (LDT2), Gasoline	2028	7,02E-03	4,81E-03	5,34E-01	2,62E-02	2,36E-03	4,57E-02	1,86E-02	2,36E+02	1,74E-03	3,76E-03
Light-Duty Truck Type 2 (LDT2), Gasoline	2029	6,39E-03	4,38E-03	5,17E-01	2,42E-02	2,30E-03	4,56E-02	1,86E-02	2,30E+02	1,61E-03	3,60E-03
Light-Duty Truck Type 2 (LDT2), Gasoline	2031	5,38E-03	3,69E-03	4,90E-01	2,12E-02	2,19E-03	4,55E-02	1,85E-02	2,19E+02	1,40E-03	3,34E-03
Light-Duty Truck Type 2 (LDT2), Gasoline	2032	4,97E-03	3,41E-03	4,80E-01	2,01E-02	2,15E-03	4,55E-02	1,84E-02	2,15E+02	1,32E-03	3,25E-03
Light-Duty Truck Type 2 (LDT2), Gasoline	2033	4,62E-03	3,16E-03	4,71E-01	1,92E-02	2,11E-03	4,54E-02	1,84E-02	2,11E+02	1,24E-03	3,17E-03
Medium Heavy-Duty Truck (MHDT), Diesel	2024	6,54E-03	5,75E-03	5,62E-02	8,30E-01	7,34E-03	1,47E-01	6,29E-02	7,69E+02	2,67E-04	1,23E-01
Medium Heavy-Duty Truck (MHDT), Diesel	2025	6,49E-03	5,70E-03	5,64E-02	8,31E-01	7,19E-03	1,47E-01	6,29E-02	7,54E+02	2,65E-04	1,21E-01
Medium Heavy-Duty Truck (MHDT), Diesel	2026	6,45E-03	5,66E-03	5,65E-02	8,32E-01	7,07E-03	1,47E-01	6,29E-02	7,41E+02	2,63E-04	1,19E-01
Medium Heavy-Duty Truck (MHDT), Diesel	2028	6,38E-03	5,61E-03	5,67E-02	8,34E-01	6,82E-03	1,47E-01	6,29E-02	7,15E+02	2,60E-04	1,14E-01
Medium Heavy-Duty Truck (MHDT), Diesel	2029	6,36E-03	5,59E-03	5,69E-02	8,36E-01	6,71E-03	1,47E-01	6,30E-02	7,04E+02	2,59E-04	1,13E-01
Medium Heavy-Duty Truck (MHDT), Diesel	2031	6,32E-03	5,56E-03	5,71E-02	8,41E-01	6,54E-03	1,47E-01	6,30E-02	6,86E+02	2,58E-04	1,10E-01
Medium Heavy-Duty Truck (MHDT), Diesel	2032	6,31E-03	5,54E-03	5,72E-02	8,43E-01	6,47E-03	1,47E-01	6,30E-02	6,78E+02	2,57E-04	1,08E-01
Medium Heavy-Duty Truck (MHDT), Diesel	2033	6,30E-03	5,54E-03	5,73E-02	8,45E-01	6,41E-03	1,47E-01	6,30E-02	6,72E+02	2,57E-04	1,07E-01
Heavy Heavy-Duty Truck (HHDT), Diesel	2024	1,70E-02	1,49E-02	1,54E-01	1,94E+00	1,14E-02	1,09E-01	4,62E-02	1,19E+03	6,92E-04	1,99E-01
Heavy Heavy-Duty Truck (HHDT), Diesel	2025	1,68E-02	1,48E-02	1,53E-01	1,90E+00	1,11E-02	1,09E-01	4,62E-02	1,16E+03	6,85E-04	1,95E-01
Heavy Heavy-Duty Truck (HHDT), Diesel	2026	1,66E-02	1,46E-02	1,53E-01	1,86E+00	1,08E-02	1,09E-01	4,60E-02	1,14E+03	6,78E-04	1,91E-01
Heavy Heavy-Duty Truck (HHDT), Diesel	2028	1,62E-02	1,42E-02	1,51E-01	1,79E+00	1,03E-02	1,09E-01	4,58E-02	1,08E+03	6,62E-04	1,82E-01
Heavy Heavy-Duty Truck (HHDT), Diesel	2029	1,60E-02	1,41E-02	1,50E-01	1,76E+00	1,01E-02	1,08E-01	4,56E-02	1,06E+03	6,53E-04	1,77E-01
Heavy Heavy-Duty Truck (HHDT), Diesel	2031	1,56E-02	1,37E-02	1,48E-01	1,70E+00	9,66E-03	1,08E-01	4,54E-02	1,01E+03	6,36E-04	1,69E-01
Heavy Heavy-Duty Truck (HHDT), Diesel	2032	1,54E-02	1,35E-02	1,48E-01	1,68E+00	9,50E-03	1,08E-01	4,53E-02	9,95E+02	6,29E-04	1,66E-01
Heavy Heavy-Duty Truck (HHDT), Diesel	2033	1,53E-02	1,34E-02	1,47E-01	1,66E+00	9,35E-03	1,08E-01	4,52E-02	9,80E+02	6,22E-04	1,63E-01

Notes:

[a] Exhaust Emission Factors in grams per mile (g/mile) were from EMFAC2017 for Placer County. A speed of 40 miles per hour (mph) was assumed for onroad vehicles, which is consistent with the CalEEMod default. An average temperature of 64 degrees Fahrenheit (°F) and humidity of 54% were used per Table B-1 of CT-EMFAC: A Computer Model to Estimate Transportation Project Emissions (UC-Davis, 2007).

RUNEX PM10	PMBW PM10	PMTW PM10	RUNEX PM2.5	PMBW PM2.5	PMTW PM2.5
1,09E-03	3,68E-02	8,00E-03	1,00E-03	1,58E-02	2,00E-03
1,05E-03	3,68E-02	8,00E-03	9,69E-04	1,58E-02	2,00E-03
1,01E-03	3,68E-02	8,00E-03	9,28E-04	1,58E-02	2,00E-03
8,92E-04	3,68E-02	8,00E-03	8,20E-04	1,58E-02	2,00E-03
8,32E-04	3,68E-02	8,00E-03	7,65E-04	1,58E-02	2,00E-03
7,26E-04	3,68E-02	8,00E-03	6,68E-04	1,58E-02	2,00E-03
6,80E-04	3,68E-02	8,00E-03	6,25E-04	1,58E-02	2,00E-03
6,38E-04	3,68E-02	8,00E-03	5,87E-04	1,58E-02	2,00E-03
1,27E-03	3,68E-02	8,00E-03	1,17E-03	1,58E-02	2,00E-03
1,20E-03	3,68E-02	8,00E-03	1,11E-03	1,58E-02	2,00E-03
1,14E-03	3,68E-02	8,00E-03	1,05E-03	1,58E-02	2,00E-03
9,96E-04	3,68E-02	8,00E-03	9,16E-04	1,58E-02	2,00E-03
9,27E-04	3,68E-02	8,00E-03	8,52E-04	1,58E-02	2,00E-03
8,05E-04	3,68E-02	8,00E-03	7,40E-04	1,58E-02	2,00E-03
7,53E-04	3,68E-02	8,00E-03	6,92E-04	1,58E-02	2,00E-03
7,07E-04	3,68E-02	8,00E-03	6,50E-04	1,58E-02	2,00E-03
1,10E-03	3,68E-02	8,00E-03	1,01E-03	1,58E-02	2,00E-03
1,07E-03	3,68E-02	8,00E-03	9,85E-04	1,58E-02	2,00E-03
1,03E-03	3,68E-02	8,00E-03	9,50E-04	1,58E-02	2,00E-03
9,29E-04	3,68E-02	8,00E-03	8,54E-04	1,58E-02	2,00E-03
8,74E-04	3,68E-02	8,00E-03	8,03E-04	1,58E-02	2,00E-03
7,70E-04	3,68E-02	8,00E-03	7,08E-04	1,58E-02	2,00E-03
7,23E-04	3,68E-02	8,00E-03	6,65E-04	1,58E-02	2,00E-03
6,80E-04	3,68E-02	8,00E-03	6,25E-04	1,58E-02	2,00E-03
4,21E-03	1,30E-01	1,20E-02	4,03E-03	5,59E-02	3,00E-03
4,23E-03	1,30E-01	1,20E-02	4,05E-03	5,59E-02	3,00E-03
4,24E-03	1,30E-01	1,20E-02	4,06E-03	5,59E-02	3,00E-03
4,27E-03	1,30E-01	1,20E-02	4,09E-03	5,59E-02	3,00E-03
4,29E-03	1,30E-01	1,20E-02	4,11E-03	5,59E-02	3,00E-03
4,33E-03	1,30E-01	1,20E-02	4,14E-03	5,59E-02	3,00E-03
4,35E-03	1,30E-01	1,20E-02	4,16E-03	5,59E-02	3,00E-03
4,37E-03	1,30E-01	1,20E-02	4,18E-03	5,59E-02	3,00E-03
1,13E-02	6,17E-02	3,60E-02	1,08E-02	2,65E-02	9,00E-03
1,12E-02	6,17E-02	3,60E-02	1,07E-02	2,65E-02	9,00E-03
1,11E-02	6,17E-02	3,60E-02	1,06E-02	2,65E-02	9,00E-03
1,08E-02	6,17E-02	3,60E-02	1,03E-02	2,65E-02	9,00E-03
1,06E-02	6,17E-02	3,60E-02	1,02E-02	2,65E-02	9,00E-03
1,03E-02	6,17E-02	3,60E-02	9,90E-03	2,65E-02	9,00E-03
1,02E-02	6,17E-02	3,60E-02	9,79E-03	2,65E-02	9,00E-03
1,01E-02	6,17E-02	3,60E-02	9,70E-03	2,65E-02	9,00E-03

On-Road Vehicle Emission Factors

Vehicle Type [a]	Calendar Year	Frequency on Unpaved Road (%) [b]	Frequency on Paved Road (%) [b]	Exhaust Emission Factors (g/mile) [c] TOG	ROG	CO	NO_x	SO_x	PM_{10}	$PM_{2.5}$	CO_2	CH_4	N_2O	Fugitive Emission Factors (g/mile) [d] PM_{10}	$PM_{2.5}$
Worker Commute	2024	10%	90%	0,010	0,007	0,598	0,033	0,002	0,046	0,019	236,7	0,002	0,004	85,9	8,6
Worker Commute	2025	10%	90%	0,009	0,006	0,564	0,030	0,002	0,046	0,019	229,5	0,002	0,004	85,9	8,6
Worker Commute	2026	10%	90%	0,008	0,005	0,535	0,027	0,002	0,046	0,019	223,0	0,002	0,004	85,9	8,6
Worker Commute	2028	10%	90%	0,006	0,004	0,491	0,023	0,002	0,046	0,019	211,9	0,001	0,004	85,9	8,6
Worker Commute	2029	10%	90%	0,006	0,004	0,474	0,022	0,002	0,046	0,019	207,2	0,001	0,003	85,9	8,6
Worker Commute	2031	10%	90%	0,005	0,003	0,447	0,019	0,002	0,046	0,018	199,4	0,001	0,003	85,9	8,6
Worker Commute	2032	10%	90%	0,004	0,003	0,436	0,019	0,002	0,045	0,018	196,2	0,001	0,003	85,9	8,6
Worker Commute	2033	10%	90%	0,004	0,003	0,427	0,018	0,002	0,045	0,018	193,4	0,001	0,003	85,9	8,6
Vendor/Material Hauling	2024	10%	90%	0,017	0,015	0,154	1,937	0,011	0,109	0,046	1190,1	0,001	0,199	85,9	8,6
Vendor/Material Hauling	2025	10%	90%	0,017	0,015	0,153	1,900	0,011	0,109	0,046	1163,4	0,001	0,195	85,9	8,6
Vendor/Material Hauling	2026	10%	90%	0,017	0,015	0,153	1,859	0,011	0,109	0,046	1136,5	0,001	0,191	85,9	8,6
Vendor/Material Hauling	2028	10%	90%	0,016	0,014	0,151	1,789	0,010	0,109	0,046	1081,6	0,001	0,182	85,9	8,6
Vendor/Material Hauling	2029	10%	90%	0,016	0,014	0,150	1,757	0,010	0,108	0,046	1056,5	0,001	0,177	85,9	8,6
Vendor/Material Hauling	2031	10%	90%	0,016	0,014	0,148	1,701	0,010	0,108	0,045	1013,0	0,001	0,169	85,9	8,6
Vendor/Material Hauling	2032	10%	90%	0,015	0,014	0,148	1,680	0,009	0,108	0,045	995,4	0,001	0,166	85,9	8,6
Vendor/Material Hauling	2033	10%	90%	0,015	0,013	0,147	1,661	0,009	0,108	0,045	980,2	0,001	0,163	85,9	8,6

Notes:

[a] Vehicle mixes are presented in the Worker Commute Vehicle Mix and Vendor/Haul Vehicle Mix tables.

[b] On-road vehicles are assumed to be on paved roads 10% of the time and on unpaved roads 90% of the time.

[c] Exhaust Emission Factors in grams per mile (g/mile) were from EMFAC2017 for Placer County. A speed of 40 miles per hour (mph) was assumed for onroad vehicles, which is consistent with the CalEEMod default. An average temperature of 64 degrees Fahrenheit (°F) and humidity of 54% were used per Table B-1 of *CT-EMFAC: A Computer Model to Estimate Transportation Project Emissions* (UC-Davis, 2007). See Vehicle Exhaust Emission Factors table for the emission factors.

[d] Fugitive Emission Factors in grams per mile (g/mile) were calculated using *AP-42* methodology, as detailed in the Derivation of Paved Road Fugitive Emission Factors and Derivation of Unpaved Road Fugitive Emission Factors tables.

WPWMA EIR
Construction Onroad Emissions
Plan Concept 2

On-Road Vehicle Emissions

Element	Year	Phase	Vehicle Type	VMT Per Day	Exhaust Emissions (lbs/day) [1]										Fugitive Emissions (lbs/day) [1]		Total Emissions (lbs/day)										Annual (lb/yr)
					TOG	ROG	CO	NO_X	SO_X	PM_{10}	$PM_{2.5}$	CO_2	CH_4	N_2O	PM_{10}	$PM_{2.5}$	TOG	ROG	CO	NO_X	SO_X	PM_{10}	$PM_{2.5}$	CO_2	CH_4	N_2O	dpm
Main Entrance	2024	Demolition	Worker Commute	0	0.000	0.000	0.000	0.000	0.000	0.000	0.000	0.000	0.000	0.000	0.000	0.000	0.000	0.000	0.000	0.000	0.000	0.000	0.000	0.000	0.000	0.000	0.000
New SW Ponds	2024	Demolition	Worker Commute	0	0.000	0.000	0.000	0.000	0.000	0.000	0.000	0.000	0.000	0.000	0.000	0.000	0.000	0.000	0.000	0.000	0.000	0.000	0.000	0.000	0.000	0.000	0.000
Unlined Area Excavation (1 of 3)	2024	Demolition	Worker Commute	0	0.000	0.000	0.000	0.000	0.000	0.000	0.000	0.000	0.000	0.000	0.000	0.000	0.000	0.000	0.000	0.000	0.000	0.000	0.000	0.000	0.000	0.000	0.000
Stockpile Relocation	2024	Demolition	Worker Commute	0	0.000	0.000	0.000	0.000	0.000	0.000	0.000	0.000	0.000	0.000	0.000	0.000	0.000	0.000	0.000	0.000	0.000	0.000	0.000	0.000	0.000	0.000	0.000
Public Area	2026	Demolition	Worker Commute	0	0.000	0.000	0.000	0.000	0.000	0.000	0.000	0.000	0.000	0.000	0.000	0.000	0.000	0.000	0.000	0.000	0.000	0.000	0.000	0.000	0.000	0.000	0.000
Public Area - SW Pond	2026	Demolition	Worker Commute	0	0.000	0.000	0.000	0.000	0.000	0.000	0.000	0.000	0.000	0.000	0.000	0.000	0.000	0.000	0.000	0.000	0.000	0.000	0.000	0.000	0.000	0.000	0.000
Unlined Area Excavation (3 of 3)	2026	Demolition	Worker Commute	0	0.000	0.000	0.000	0.000	0.000	0.000	0.000	0.000	0.000	0.000	0.000	0.000	0.000	0.000	0.000	0.000	0.000	0.000	0.000	0.000	0.000	0.000	0.000
Landfill Construction3	2031	Demolition	Worker Commute	0	0.000	0.000	0.000	0.000	0.000	0.000	0.000	0.000	0.000	0.000	0.000	0.000	0.000	0.000	0.000	0.000	0.000	0.000	0.000	0.000	0.000	0.000	0.000
Landfill Lining & Partial Closure4	2032	Demolition	Worker Commute	0	0.000	0.000	0.000	0.000	0.000	0.000	0.000	0.000	0.000	0.000	0.000	0.000	0.000	0.000	0.000	0.000	0.000	0.000	0.000	0.000	0.000	0.000	0.000
Admin Building	2032	Demolition	Worker Commute	0	0.000	0.000	0.000	0.000	0.000	0.000	0.000	0.000	0.000	0.000	0.000	0.000	0.000	0.000	0.000	0.000	0.000	0.000	0.000	0.000	0.000	0.000	0.000
Recovered Materials Storage	2032	Demolition	Worker Commute	0	0.000	0.000	0.000	0.000	0.000	0.000	0.000	0.000	0.000	0.000	0.000	0.000	0.000	0.000	0.000	0.000	0.000	0.000	0.000	0.000	0.000	0.000	0.000
Shared Site Utilities	2032	Demolition	Worker Commute	0	0.000	0.000	0.000	0.000	0.000	0.000	0.000	0.000	0.000	0.000	0.000	0.000	0.000	0.000	0.000	0.000	0.000	0.000	0.000	0.000	0.000	0.000	0.000
Main Entrance	2024	Site Preparation	Worker Commute	0	0.000	0.000	0.000	0.000	0.000	0.000	0.000	0.000	0.000	0.000	0.000	0.000	0.000	0.000	0.000	0.000	0.000	0.000	0.000	0.000	0.000	0.000	0.000
New SW Ponds	2024	Site Preparation	Worker Commute	0	0.000	0.000	0.000	0.000	0.000	0.000	0.000	0.000	0.000	0.000	0.000	0.000	0.000	0.000	0.000	0.000	0.000	0.000	0.000	0.000	0.000	0.000	0.000
Unlined Area Excavation (1 of 3)	2024	Site Preparation	Worker Commute	0	0.000	0.000	0.000	0.000	0.000	0.000	0.000	0.000	0.000	0.000	0.000	0.000	0.000	0.000	0.000	0.000	0.000	0.000	0.000	0.000	0.000	0.000	0.000
Stockpile Relocation	2024	Site Preparation	Worker Commute	0	0.000	0.000	0.000	0.000	0.000	0.000	0.000	0.000	0.000	0.000	0.000	0.000	0.000	0.000	0.000	0.000	0.000	0.000	0.000	0.000	0.000	0.000	0.000
Public Area	2026	Site Preparation	Worker Commute	0	0.000	0.000	0.000	0.000	0.000	0.000	0.000	0.000	0.000	0.000	0.000	0.000	0.000	0.000	0.000	0.000	0.000	0.000	0.000	0.000	0.000	0.000	0.000
Public Area - SW Pond	2026	Site Preparation	Worker Commute	0	0.000	0.000	0.000	0.000	0.000	0.000	0.000	0.000	0.000	0.000	0.000	0.000	0.000	0.000	0.000	0.000	0.000	0.000	0.000	0.000	0.000	0.000	0.000
Unlined Area Excavation (3 of 3)	2026	Site Preparation	Worker Commute	0	0.000	0.000	0.000	0.000	0.000	0.000	0.000	0.000	0.000	0.000	0.000	0.000	0.000	0.000	0.000	0.000	0.000	0.000	0.000	0.000	0.000	0.000	0.000
Landfill Construction3	2031	Site Preparation	Worker Commute	0	0.000	0.000	0.000	0.000	0.000	0.000	0.000	0.000	0.000	0.000	0.000	0.000	0.000	0.000	0.000	0.000	0.000	0.000	0.000	0.000	0.000	0.000	0.000
Landfill Lining & Partial Closure4	2032	Site Preparation	Worker Commute	0	0.000	0.000	0.000	0.000	0.000	0.000	0.000	0.000	0.000	0.000	0.000	0.000	0.000	0.000	0.000	0.000	0.000	0.000	0.000	0.000	0.000	0.000	0.000
Admin Building	2032	Site Preparation	Worker Commute	0	0.000	0.000	0.000	0.000	0.000	0.000	0.000	0.000	0.000	0.000	0.000	0.000	0.000	0.000	0.000	0.000	0.000	0.000	0.000	0.000	0.000	0.000	0.000
Recovered Materials Storage	2032	Site Preparation	Worker Commute	0	0.000	0.000	0.000	0.000	0.000	0.000	0.000	0.000	0.000	0.000	0.000	0.000	0.000	0.000	0.000	0.000	0.000	0.000	0.000	0.000	0.000	0.000	0.000
Shared Site Utilities	2032	Site Preparation	Worker Commute	0	0.000	0.000	0.000	0.000	0.000	0.000	0.000	0.000	0.000	0.000	0.000	0.000	0.000	0.000	0.000	0.000	0.000	0.000	0.000	0.000	0.000	0.000	0.000
Main Entrance	2024	Grading	Worker Commute	0	0.000	0.000	0.000	0.000	0.000	0.000	0.000	0.000	0.000	0.000	0.000	0.000	0.000	0.000	0.000	0.000	0.000	0.000	0.000	0.000	0.000	0.000	0.000
New SW Ponds	2024	Grading	Worker Commute	0	0.000	0.000	0.000	0.000	0.000	0.000	0.000	0.000	0.000	0.000	0.000	0.000	0.000	0.000	0.000	0.000	0.000	0.000	0.000	0.000	0.000	0.000	0.000
Unlined Area Excavation (1 of 3)	2024	Grading	Worker Commute	0	0.000	0.000	0.000	0.000	0.000	0.000	0.000	0.000	0.000	0.000	0.000	0.000	0.000	0.000	0.000	0.000	0.000	0.000	0.000	0.000	0.000	0.000	0.000
Stockpile Relocation	2024	Grading	Worker Commute	0	0.000	0.000	0.000	0.000	0.000	0.000	0.000	0.000	0.000	0.000	0.000	0.000	0.000	0.000	0.000	0.000	0.000	0.000	0.000	0.000	0.000	0.000	0.000
Public Area	2026	Grading	Worker Commute	0	0.000	0.000	0.000	0.000	0.000	0.000	0.000	0.000	0.000	0.000	0.000	0.000	0.000	0.000	0.000	0.000	0.000	0.000	0.000	0.000	0.000	0.000	0.000
Public Area - SW Pond	2026	Grading	Worker Commute	0	0.000	0.000	0.000	0.000	0.000	0.000	0.000	0.000	0.000	0.000	0.000	0.000	0.000	0.000	0.000	0.000	0.000	0.000	0.000	0.000	0.000	0.000	0.000
Unlined Area Excavation (3 of 3)	2026	Grading	Worker Commute	0	0.000	0.000	0.000	0.000	0.000	0.000	0.000	0.000	0.000	0.000	0.000	0.000	0.000	0.000	0.000	0.000	0.000	0.000	0.000	0.000	0.000	0.000	0.000
Landfill Construction3	2031	Grading	Worker Commute	0	0.000	0.000	0.000	0.000	0.000	0.000	0.000	0.000	0.000	0.000	0.000	0.000	0.000	0.000	0.000	0.000	0.000	0.000	0.000	0.000	0.000	0.000	0.000
Landfill Lining & Partial Closure4	2032	Grading	Worker Commute	0	0.000	0.000	0.000	0.000	0.000	0.000	0.000	0.000	0.000	0.000	0.000	0.000	0.000	0.000	0.000	0.000	0.000	0.000	0.000	0.000	0.000	0.000	0.000
Admin Building	2032	Grading	Worker Commute	0	0.000	0.000	0.000	0.000	0.000	0.000	0.000	0.000	0.000	0.000	0.000	0.000	0.000	0.000	0.000	0.000	0.000	0.000	0.000	0.000	0.000	0.000	0.000
Recovered Materials Storage	2032	Grading	Worker Commute	0	0.000	0.000	0.000	0.000	0.000	0.000	0.000	0.000	0.000	0.000	0.000	0.000	0.000	0.000	0.000	0.000	0.000	0.000	0.000	0.000	0.000	0.000	0.000
Shared Site Utilities	2032	Grading	Worker Commute	0	0.000	0.000	0.000	0.000	0.000	0.000	0.000	0.000	0.000	0.000	0.000	0.000	0.000	0.000	0.000	0.000	0.000	0.000	0.000	0.000	0.000	0.000	0.000
Main Entrance	2024	Building Construction	Worker Commute	0	0.000	0.000	0.000	0.000	0.000	0.000	0.000	0.000	0.000	0.000	0.000	0.000	0.000	0.000	0.000	0.000	0.000	0.000	0.000	0.000	0.000	0.000	0.000
New SW Ponds	2024	Building Construction	Worker Commute	0	0.000	0.000	0.000	0.000	0.000	0.000	0.000	0.000	0.000	0.000	0.000	0.000	0.000	0.000	0.000	0.000	0.000	0.000	0.000	0.000	0.000	0.000	0.000
Unlined Area Excavation (1 of 3)	2024	Building Construction	Worker Commute	0	0.000	0.000	0.000	0.000	0.000	0.000	0.000	0.000	0.000	0.000	0.000	0.000	0.000	0.000	0.000	0.000	0.000	0.000	0.000	0.000	0.000	0.000	0.000
Stockpile Relocation	2024	Building Construction	Worker Commute	0	0.000	0.000	0.000	0.000	0.000	0.000	0.000	0.000	0.000	0.000	0.000	0.000	0.000	0.000	0.000	0.000	0.000	0.000	0.000	0.000	0.000	0.000	0.000
Public Area	2026	Building Construction	Worker Commute	0	0.000	0.000	0.000	0.000	0.000	0.000	0.000	0.000	0.000	0.000	0.000	0.000	0.000	0.000	0.000	0.000	0.000	0.000	0.000	0.000	0.000	0.000	0.000
Public Area - SW Pond	2026	Building Construction	Worker Commute	0	0.000	0.000	0.000	0.000	0.000	0.000	0.000	0.000	0.000	0.000	0.000	0.000	0.000	0.000	0.000	0.000	0.000	0.000	0.000	0.000	0.000	0.000	0.000
Unlined Area Excavation (3 of 3)	2026	Building Construction	Worker Commute	0	0.000	0.000	0.000	0.000	0.000	0.000	0.000	0.000	0.000	0.000	0.000	0.000	0.000	0.000	0.000	0.000	0.000	0.000	0.000	0.000	0.000	0.000	0.000
Landfill Construction3	2031	Building Construction	Worker Commute	0	0.000	0.000	0.000	0.000	0.000	0.000	0.000	0.000	0.000	0.000	0.000	0.000	0.000	0.000	0.000	0.000	0.000	0.000	0.000	0.000	0.000	0.000	0.000
Landfill Lining & Partial Closure4	2032	Building Construction	Worker Commute	0	0.000	0.000	0.000	0.000	0.000	0.000	0.000	0.000	0.000	0.000	0.000	0.000	0.000	0.000	0.000	0.000	0.000	0.000	0.000	0.000	0.000	0.000	0.000
Admin Building	2032	Building Construction	Worker Commute	0	0.000	0.000	0.000	0.000	0.000	0.000	0.000	0.000	0.000	0.000	0.000	0.000	0.000	0.000	0.000	0.000	0.000	0.000	0.000	0.000	0.000	0.000	0.000
Recovered Materials Storage	2032	Building Construction	Worker Commute	0	0.000	0.000	0.000	0.000	0.000	0.000	0.000	0.000	0.000	0.000	0.000	0.000	0.000	0.000	0.000	0.000	0.000	0.000	0.000	0.000	0.000	0.000	0.000
Shared Site Utilities	2032	Building Construction	Worker Commute	0	0.000	0.000	0.000	0.000	0.000	0.000	0.000	0.000	0.000	0.000	0.000	0.000	0.000	0.000	0.000	0.000	0.000	0.000	0.000	0.000	0.000	0.000	0.000
Main Entrance	2024	Paving - Asphalt	Worker Commute	0	0.000	0.000	0.000	0.000	0.000	0.000	0.000	0.000	0.000	0.000	0.000	0.000	0.000	0.000	0.000	0.000	0.000	0.000	0.000	0.000	0.000	0.000	0.000
New SW Ponds	2024	Paving - Asphalt	Worker Commute	0	0.000	0.000	0.000	0.000	0.000	0.000	0.000	0.000	0.000	0.000	0.000	0.000	0.000	0.000	0.000	0.000	0.000	0.000	0.000	0.000	0.000	0.000	0.000
Unlined Area Excavation (1 of 3)	2024	Paving - Asphalt	Worker Commute	0	0.000	0.000	0.000	0.000	0.000	0.000	0.000	0.000	0.000	0.000	0.000	0.000	0.000	0.000	0.000	0.000	0.000	0.000	0.000	0.000	0.000	0.000	0.000
Stockpile Relocation	2024	Paving - Asphalt	Worker Commute	0	0.000	0.000	0.000	0.000	0.000	0.000	0.000	0.000	0.000	0.000	0.000	0.000	0.000	0.000	0.000	0.000	0.000	0.000	0.000	0.000	0.000	0.000	0.000
Public Area	2026	Paving - Asphalt	Worker Commute	0	0.000	0.000	0.000	0.000	0.000	0.000	0.000	0.000	0.000	0.000	0.000	0.000	0.000	0.000	0.000	0.000	0.000	0.000	0.000	0.000	0.000	0.000	0.000
Public Area - SW Pond	2026	Paving - Asphalt	Worker Commute	0	0.000	0.000	0.000	0.000	0.000	0.000	0.000	0.000	0.000	0.000	0.000	0.000	0.000	0.000	0.000	0.000	0.000	0.000	0.000	0.000	0.000	0.000	0.000
Unlined Area Excavation (3 of 3)	2026	Paving - Asphalt	Worker Commute	0	0.000	0.000	0.000	0.000	0.000	0.000	0.000	0.000	0.000	0.000	0.000	0.000	0.000	0.000	0.000	0.000	0.000	0.000	0.000	0.000	0.000	0.000	0.000
Landfill Construction3	2031	Paving - Asphalt	Worker Commute	0	0.000	0.000	0.000	0.000	0.000	0.000	0.000	0.000	0.000	0.000	0.000	0.000	0.000	0.000	0.000	0.000	0.000	0.000	0.000	0.000	0.000	0.000	0.000
Landfill Lining & Partial Closure4	2032	Paving - Asphalt	Worker Commute	0	0.000	0.000	0.000	0.000	0.000	0.000	0.000	0.000	0.000	0.000	0.000	0.000	0.000	0.000	0.000	0.000	0.000	0.000	0.000	0.000	0.000	0.000	0.000
Admin Building	2032	Paving - Asphalt	Worker Commute	0	0.000	0.000	0.000	0.000	0.000	0.000	0.000	0.000	0.000	0.000	0.000	0.000	0.000	0.000	0.000	0.000	0.000	0.000	0.000	0.000	0.000	0.000	0.000
Recovered Materials Storage	2032	Paving - Asphalt	Worker Commute	0	0.000	0.000	0.000	0.000	0.000	0.000	0.000	0.000	0.000	0.000	0.000	0.000	0.000	0.000	0.000	0.000	0.000	0.000	0.000	0.000	0.000	0.000	0.000
Shared Site Utilities	2032	Paving - Asphalt	Worker Commute	0	0.000	0.000	0.000	0.000	0.000	0.000	0.000	0.000	0.000	0.000	0.000	0.000	0.000	0.000	0.000	0.000	0.000	0.000	0.000	0.000	0.000	0.000	0.000
Main Entrance	2024	Paving - Concrete	Worker Commute	0	0.000	0.000	0.000	0.000	0.000	0.000	0.000	0.000	0.000	0.000	0.000	0.000	0.000	0.000	0.000	0.000	0.000	0.000	0.000	0.000	0.000	0.000	0.000
New SW Ponds	2024	Paving - Concrete	Worker Commute	0	0.000	0.000	0.000	0.000	0.000	0.000	0.000	0.000	0.000	0.000	0.000	0.000	0.000	0.000	0.000	0.000	0.000	0.000	0.000	0.000	0.000	0.000	0.000
Unlined Area Excavation (1 of 3)	2024	Paving - Concrete	Worker Commute	0	0.000	0.000	0.000	0.000	0.000	0.000	0.000	0.000	0.000	0.000	0.000	0.000	0.000	0.000	0.000	0.000	0.000	0.000	0.000	0.000	0.000	0.000	0.000
Stockpile Relocation	2024	Paving - Concrete	Worker Commute	0	0.000	0.000	0.000	0.000	0.000	0.000	0.000	0.000	0.000	0.000	0.000	0.000	0.000	0.000	0.000	0.000	0.000	0.000	0.000	0.000	0.000	0.000	0.000
Public Area	2026	Paving - Concrete	Worker Commute	0	0.000	0.000	0.000	0.000	0.000	0.000	0.000	0.000	0.000	0.000	0.000	0.000	0.000	0.000	0.000	0.000	0.000	0.000	0.000	0.000	0.000	0.000	0.000
Public Area - SW Pond	2026	Paving - Concrete	Worker Commute	0	0.000	0.000	0.000	0.000	0.000	0.000	0.000	0.000	0.000	0.000	0.000	0.000	0.000	0.000	0.000	0.000	0.000	0.000	0.000	0.000	0.000	0.000	0.000
Unlined Area Excavation (3 of 3)	2026	Paving - Concrete	Worker Commute	0	0.000	0.000	0.000	0.000	0.000	0.000	0.000	0.000	0.000	0.000	0.000	0.000	0.000	0.000	0.000	0.000	0.000	0.000	0.000	0.000	0.000	0.000	0.000
Landfill Construction3	2031	Paving - Concrete	Worker Commute	0	0.000	0.000	0.000	0.000	0.000	0.000	0.000	0.000	0.000	0.000	0.000	0.000	0.000	0.000	0.000	0.000	0.000	0.000	0.000	0.000	0.000	0.000	0.000
Landfill Lining & Partial Closure4	2032	Paving - Concrete	Worker Commute	0	0.000	0.000	0.000	0.000	0.000	0.000	0.000	0.000	0.000	0.000	0.000	0.000	0.000	0.000	0.000	0.000	0.000	0.000	0.000	0.000	0.000	0.000	0.000
Admin Building	2032	Paving - Concrete	Worker Commute	0	0.000	0.000	0.000	0.000	0.000	0.000	0.000	0.000	0.000	0.000	0.000	0.000	0.000	0.000	0.000	0.000	0.000	0.000	0.000	0.000	0.000	0.000	0.000
Recovered Materials Storage	2032	Paving - Concrete	Worker Commute	0	0.000	0.000	0.000	0.000	0.000	0.000	0.000	0.000	0.000	0.000	0.000	0.000	0.000	0.000	0.000	0.000	0.000	0.000	0.000	0.000	0.000	0.000	0.000
Shared Site Utilities	2032	Paving - Concrete	Worker Commute	0	0.000	0.000	0.000	0.000	0.000	0.000	0.000	0.000	0.000	0.000	0.000	0.000	0.000	0.000	0.000	0.000	0.000	0.000	0.000	0.000	0.000	0.000	0.000
Main Entrance	2024	Site Preparation - Pond	Worker Commute	0	0.000	0.000	0.000	0.000	0.000	0.000	0.000	0.000	0.000	0.000	0.000	0.000	0.000	0.000	0.000	0.000	0.000	0.000	0.000	0.000	0.000	0.000	0.000
New SW Ponds	2024	Site Preparation - Pond	Worker Commute	0	0.000	0.000	0.000	0.000	0.000	0.000	0.000	0.000	0.000	0.000	0.000	0.000	0.000	0.000	0.000	0.000	0.000	0.000	0.000	0.000	0.000	0.000	0.000
Unlined Area Excavation (1 of 3)	2024	Site Preparation - Pond	Worker Commute	0	0.000	0.000	0.000	0.000	0.000	0.000	0.000	0.000	0.000	0.000	0.000	0.000	0.000	0.000	0.000	0.000	0.000	0.000	0.000	0.000	0.000	0.000	0.000
Stockpile Relocation	2024	Site Preparation - Pond	Worker Commute	0	0.000	0.000	0.000	0.000	0.000	0.000	0.000	0.000	0.000	0.000	0.000	0.000	0.000	0.000	0.000	0.000	0.000	0.000	0.000	0.000	0.000	0.000	0.000
Public Area	2026	Site Preparation - Pond	Worker Commute	0	0.000	0.000	0.000	0.000	0.000	0.000	0.000	0.000	0.000	0.000	0.000	0.000	0.000	0.000	0.000	0.000	0.000	0.000	0.000	0.000	0.000	0.000	0.000
Public Area - SW Pond	2026	Site Preparation - Pond	Worker Commute	0	0.000	0.000	0.000	0.000	0.000	0.000	0.000	0.000	0.000	0.000	0.000	0.000	0.000	0.000	0.000	0.000	0.000	0.000	0.000	0.000	0.000	0.000	0.000
Unlined Area Excavation (3 of 3)	2026	Site Preparation - Pond	Worker Commute	0	0.000	0.000	0.000	0.000	0.000	0.000	0.000	0.000	0.000	0.000	0.000	0.000	0.000	0.000	0.000	0.000	0.000	0.000	0.000	0.000	0.000	0.000	0.000
Landfill Construction3	2031	Site Preparation - Pond	Worker Commute	0	0.000	0.000	0.000	0.000	0.000	0.000	0.000	0.000	0.000	0.000	0.000	0.000	0.000	0.000	0.000	0.000	0.000	0.000	0.000	0.000	0.000	0.000	0.000
Landfill Lining & Partial Closure4	2032	Site Preparation - Pond	Worker Commute	0	0.000	0.000	0.000	0.000	0.000	0.000	0.000	0.000	0.000	0.000	0.000	0.000	0.000	0.000	0.000	0.000	0.000	0.000	0.000	0.000	0.000	0.000	0.000
Admin Building	2032	Site Preparation - Pond	Worker Commute	0	0.000	0.000	0.000	0.000	0.000	0.000	0.000	0.000	0.000	0.000	0.000	0.000	0.000	0.000	0.000	0.000	0.000	0.000	0.000	0.000	0.000	0.000	0.000
Recovered Materials Storage	2032	Site Preparation - Pond	Worker Commute	0	0.000	0.000	0.000	0.000	0.000	0.000	0.000	0.000	0.000	0.000	0.000	0.000	0.000	0.000	0.000	0.000	0.000	0.000	0.000	0.000	0.000	0.000	0.000
Shared Site Utilities	2032	Site Preparation - Pond	Worker Commute	0	0.000	0.000	0.000	0.000	0.000	0.000	0.000	0.000	0.000	0.000	0.000	0.000	0.000	0.000	0.000	0.000	0.000	0.000	0.000	0.000	0.000	0.000	0.000
Main Entrance	2024	Excavation	Worker Commute	0	0.000	0.000	0.000	0.000	0.000	0.000	0.000	0.000	0.000	0.000	0.000	0.000	0.000	0.000	0.000	0.000	0.000	0.000	0.000	0.000	0.000	0.000	0.000
New SW Ponds	2024	Excavation	Worker Commute	0	0.000	0.000	0.000	0.000	0.000	0.000	0.000	0.000	0.000	0.000	0.000	0.000	0.000	0.000	0.000	0.000	0.000	0.000	0.000	0.000	0.000	0.000	0.000
Unlined Area Excavation (1 of 3)	2024	Excavation	Worker Commute	0	0.000	0.000	0.000	0.000	0.000	0.000	0.000	0.000	0.000	0.000	0.000	0.000	0.000	0.000	0.000	0.000	0.000	0.000	0.000	0.000	0.000	0.000	0.000
Stockpile Relocation	2024	Excavation	Worker Commute	0	0.000	0.000	0.000	0.000	0.000	0.000	0.000	0.000	0.000	0.000	0.000	0.000	0.000	0.000	0.000	0.000	0.000	0.000	0.000	0.000	0.000	0.000	0.000
Public Area	2026	Excavation	Worker Commute	0	0.000	0.000	0.000	0.000	0.000	0.000	0.000	0.000	0.000	0.000	0.000	0.000	0.000	0.000	0.000	0.000	0.000	0.000	0.000	0.000	0.000	0.000	0.000

WPWMA EIR
Construction Onroad Emissions
Plan Concept 2

Public Area - SW Pond	2026	Excavation	Worker Commute	0	0,000	0,000	0,000	0,000	0,000	0,000	0,000	0,000	0,000	0,000	0,000	0,000	0,000	0,000	0,000	0,000	0,000	0,000	0,000	0,000	0,000	0,000	0,000	0,000	0,000
Unlined Area Excavation (3 of 3)	2026	Excavation	Worker Commute	0	0,000	0,000	0,000	0,000	0,000	0,000	0,000	0,000	0,000	0,000	0,000	0,000	0,000	0,000	0,000	0,000	0,000	0,000	0,000	0,000	0,000	0,000	0,000	0,000	0,000
Landfill Construction3	2031	Excavation	Worker Commute	0	0,000	0,000	0,000	0,000	0,000	0,000	0,000	0,000	0,000	0,000	0,000	0,000	0,000	0,000	0,000	0,000	0,000	0,000	0,000	0,000	0,000	0,000	0,000	0,000	0,000
Landfill Lining & Partial Closure4	2032	Excavation	Worker Commute	0	0,000	0,000	0,000	0,000	0,000	0,000	0,000	0,000	0,000	0,000	0,000	0,000	0,000	0,000	0,000	0,000	0,000	0,000	0,000	0,000	0,000	0,000	0,000	0,000	0,000
Admin Building	2032	Excavation	Worker Commute	0	0,000	0,000	0,000	0,000	0,000	0,000	0,000	0,000	0,000	0,000	0,000	0,000	0,000	0,000	0,000	0,000	0,000	0,000	0,000	0,000	0,000	0,000	0,000	0,000	0,000
Recovered Materials Storage	2032	Excavation	Worker Commute	0	0,000	0,000	0,000	0,000	0,000	0,000	0,000	0,000	0,000	0,000	0,000	0,000	0,000	0,000	0,000	0,000	0,000	0,000	0,000	0,000	0,000	0,000	0,000	0,000	0,000
Shared Site Utilities	2032	Excavation	Worker Commute	0	0,000	0,000	0,000	0,000	0,000	0,000	0,000	0,000	0,000	0,000	0,000	0,000	0,000	0,000	0,000	0,000	0,000	0,000	0,000	0,000	0,000	0,000	0,000	0,000	0,000
Main Entrance	2024	Lining and Partial Closure	Worker Commute	0	0,000	0,000	0,000	0,000	0,000	0,000	0,000	0,000	0,000	0,000	0,000	0,000	0,000	0,000	0,000	0,000	0,000	0,000	0,000	0,000	0,000	0,000	0,000	0,000	0,000
New SW Ponds	2024	Lining and Partial Closure	Worker Commute	0	0,000	0,000	0,000	0,000	0,000	0,000	0,000	0,000	0,000	0,000	0,000	0,000	0,000	0,000	0,000	0,000	0,000	0,000	0,000	0,000	0,000	0,000	0,000	0,000	0,000
Unlined Area Excavation (1 of 3)	2024	Lining and Partial Closure	Worker Commute	0	0,000	0,000	0,000	0,000	0,000	0,000	0,000	0,000	0,000	0,000	0,000	0,000	0,000	0,000	0,000	0,000	0,000	0,000	0,000	0,000	0,000	0,000	0,000	0,000	0,000
Stockpile Relocation	2024	Lining and Partial Closure	Worker Commute	0	0,000	0,000	0,000	0,000	0,000	0,000	0,000	0,000	0,000	0,000	0,000	0,000	0,000	0,000	0,000	0,000	0,000	0,000	0,000	0,000	0,000	0,000	0,000	0,000	0,000
Public Area	2026	Lining and Partial Closure	Worker Commute	0	0,000	0,000	0,000	0,000	0,000	0,000	0,000	0,000	0,000	0,000	0,000	0,000	0,000	0,000	0,000	0,000	0,000	0,000	0,000	0,000	0,000	0,000	0,000	0,000	0,000
Public Area - SW Pond	2026	Lining and Partial Closure	Worker Commute	0	0,000	0,000	0,000	0,000	0,000	0,000	0,000	0,000	0,000	0,000	0,000	0,000	0,000	0,000	0,000	0,000	0,000	0,000	0,000	0,000	0,000	0,000	0,000	0,000	0,000
Unlined Area Excavation (3 of 3)	2026	Lining and Partial Closure	Worker Commute	0	0,000	0,000	0,000	0,000	0,000	0,000	0,000	0,000	0,000	0,000	0,000	0,000	0,000	0,000	0,000	0,000	0,000	0,000	0,000	0,000	0,000	0,000	0,000	0,000	0,000
Landfill Construction3	2031	Lining and Partial Closure	Worker Commute	0	0,000	0,000	0,000	0,000	0,000	0,000	0,000	0,000	0,000	0,000	0,000	0,000	0,000	0,000	0,000	0,000	0,000	0,000	0,000	0,000	0,000	0,000	0,000	0,000	0,000
Landfill Lining & Partial Closure4	2032	Lining and Partial Closure	Worker Commute	0	0,000	0,000	0,000	0,000	0,000	0,000	0,000	0,000	0,000	0,000	0,000	0,000	0,000	0,000	0,000	0,000	0,000	0,000	0,000	0,000	0,000	0,000	0,000	0,000	0,000
Admin Building	2032	Lining and Partial Closure	Worker Commute	0	0,000	0,000	0,000	0,000	0,000	0,000	0,000	0,000	0,000	0,000	0,000	0,000	0,000	0,000	0,000	0,000	0,000	0,000	0,000	0,000	0,000	0,000	0,000	0,000	0,000
Recovered Materials Storage	2032	Lining and Partial Closure	Worker Commute	0	0,000	0,000	0,000	0,000	0,000	0,000	0,000	0,000	0,000	0,000	0,000	0,000	0,000	0,000	0,000	0,000	0,000	0,000	0,000	0,000	0,000	0,000	0,000	0,000	0,000
Shared Site Utilities	2032	Lining and Partial Closure	Worker Commute	0	0,000	0,000	0,000	0,000	0,000	0,000	0,000	0,000	0,000	0,000	0,000	0,000	0,000	0,000	0,000	0,000	0,000	0,000	0,000	0,000	0,000	0,000	0,000	0,000	0,000
Main Entrance	2024	Stockpile Movement	Worker Commute	0	0,000	0,000	0,000	0,000	0,000	0,000	0,000	0,000	0,000	0,000	0,000	0,000	0,000	0,000	0,000	0,000	0,000	0,000	0,000	0,000	0,000	0,000	0,000	0,000	0,000
New SW Ponds	2024	Stockpile Movement	Worker Commute	0	0,000	0,000	0,000	0,000	0,000	0,000	0,000	0,000	0,000	0,000	0,000	0,000	0,000	0,000	0,000	0,000	0,000	0,000	0,000	0,000	0,000	0,000	0,000	0,000	0,000
Unlined Area Excavation (1 of 3)	2024	Stockpile Movement	Worker Commute	0	0,000	0,000	0,000	0,000	0,000	0,000	0,000	0,000	0,000	0,000	0,000	0,000	0,000	0,000	0,000	0,000	0,000	0,000	0,000	0,000	0,000	0,000	0,000	0,000	0,000
Stockpile Relocation	2024	Stockpile Movement	Worker Commute	0	0,000	0,000	0,000	0,000	0,000	0,000	0,000	0,000	0,000	0,000	0,000	0,000	0,000	0,000	0,000	0,000	0,000	0,000	0,000	0,000	0,000	0,000	0,000	0,000	0,000
Public Area	2026	Stockpile Movement	Worker Commute	0	0,000	0,000	0,000	0,000	0,000	0,000	0,000	0,000	0,000	0,000	0,000	0,000	0,000	0,000	0,000	0,000	0,000	0,000	0,000	0,000	0,000	0,000	0,000	0,000	0,000
Public Area - SW Pond	2026	Stockpile Movement	Worker Commute	0	0,000	0,000	0,000	0,000	0,000	0,000	0,000	0,000	0,000	0,000	0,000	0,000	0,000	0,000	0,000	0,000	0,000	0,000	0,000	0,000	0,000	0,000	0,000	0,000	0,000
Unlined Area Excavation (3 of 3)	2026	Stockpile Movement	Worker Commute	0	0,000	0,000	0,000	0,000	0,000	0,000	0,000	0,000	0,000	0,000	0,000	0,000	0,000	0,000	0,000	0,000	0,000	0,000	0,000	0,000	0,000	0,000	0,000	0,000	0,000
Landfill Construction3	2031	Stockpile Movement	Worker Commute	0	0,000	0,000	0,000	0,000	0,000	0,000	0,000	0,000	0,000	0,000	0,000	0,000	0,000	0,000	0,000	0,000	0,000	0,000	0,000	0,000	0,000	0,000	0,000	0,000	0,000
Landfill Lining & Partial Closure4	2032	Stockpile Movement	Worker Commute	0	0,000	0,000	0,000	0,000	0,000	0,000	0,000	0,000	0,000	0,000	0,000	0,000	0,000	0,000	0,000	0,000	0,000	0,000	0,000	0,000	0,000	0,000	0,000	0,000	0,000
Admin Building	2032	Stockpile Movement	Worker Commute	0	0,000	0,000	0,000	0,000	0,000	0,000	0,000	0,000	0,000	0,000	0,000	0,000	0,000	0,000	0,000	0,000	0,000	0,000	0,000	0,000	0,000	0,000	0,000	0,000	0,000
Recovered Materials Storage	2032	Stockpile Movement	Worker Commute	0	0,000	0,000	0,000	0,000	0,000	0,000	0,000	0,000	0,000	0,000	0,000	0,000	0,000	0,000	0,000	0,000	0,000	0,000	0,000	0,000	0,000	0,000	0,000	0,000	0,000
Shared Site Utilities	2032	Stockpile Movement	Worker Commute	0	0,000	0,000	0,000	0,000	0,000	0,000	0,000	0,000	0,000	0,000	0,000	0,000	0,000	0,000	0,000	0,000	0,000	0,000	0,000	0,000	0,000	0,000	0,000	0,000	0,000
Main Entrance	2024	Demolition	Vendor/Material Hauling	0	0,000	0,000	0,000	0,000	0,000	0,000	0,000	0,000	0,000	0,000	0,000	0,000	0,000	0,000	0,000	0,000	0,000	0,000	0,000	0,000	0,000	0,000	0,000	0,000	0,000
New SW Ponds	2024	Demolition	Vendor/Material Hauling	0	0,000	0,000	0,000	0,000	0,000	0,000	0,000	0,000	0,000	0,000	0,000	0,000	0,000	0,000	0,000	0,000	0,000	0,000	0,000	0,000	0,000	0,000	0,000	0,000	0,000
Unlined Area Excavation (1 of 3)	2024	Demolition	Vendor/Material Hauling	0	0,000	0,000	0,000	0,000	0,000	0,000	0,000	0,000	0,000	0,000	0,000	0,000	0,000	0,000	0,000	0,000	0,000	0,000	0,000	0,000	0,000	0,000	0,000	0,000	0,000
Stockpile Relocation	2024	Demolition	Vendor/Material Hauling	0	0,000	0,000	0,000	0,000	0,000	0,000	0,000	0,000	0,000	0,000	0,000	0,000	0,000	0,000	0,000	0,000	0,000	0,000	0,000	0,000	0,000	0,000	0,000	0,000	0,000
Public Area	2026	Demolition	Vendor/Material Hauling	0	0,000	0,000	0,000	0,000	0,000	0,000	0,000	0,000	0,000	0,000	0,000	0,000	0,000	0,000	0,000	0,000	0,000	0,000	0,000	0,000	0,000	0,000	0,000	0,000	0,000
Public Area - SW Pond	2026	Demolition	Vendor/Material Hauling	0	0,000	0,000	0,000	0,000	0,000	0,000	0,000	0,000	0,000	0,000	0,000	0,000	0,000	0,000	0,000	0,000	0,000	0,000	0,000	0,000	0,000	0,000	0,000	0,000	0,000
Unlined Area Excavation (3 of 3)	2026	Demolition	Vendor/Material Hauling	0	0,000	0,000	0,000	0,000	0,000	0,000	0,000	0,000	0,000	0,000	0,000	0,000	0,000	0,000	0,000	0,000	0,000	0,000	0,000	0,000	0,000	0,000	0,000	0,000	0,000
Landfill Construction3	2031	Demolition	Vendor/Material Hauling	0	0,000	0,000	0,000	0,000	0,000	0,000	0,000	0,000	0,000	0,000	0,000	0,000	0,000	0,000	0,000	0,000	0,000	0,000	0,000	0,000	0,000	0,000	0,000	0,000	0,000
Landfill Lining & Partial Closure4	2032	Demolition	Vendor/Material Hauling	0	0,000	0,000	0,000	0,000	0,000	0,000	0,000	0,000	0,000	0,000	0,000	0,000	0,000	0,000	0,000	0,000	0,000	0,000	0,000	0,000	0,000	0,000	0,000	0,000	0,000
Admin Building	2032	Demolition	Vendor/Material Hauling	0	0,000	0,000	0,000	0,000	0,000	0,000	0,000	0,000	0,000	0,000	0,000	0,000	0,000	0,000	0,000	0,000	0,000	0,000	0,000	0,000	0,000	0,000	0,000	0,000	0,000
Recovered Materials Storage	2032	Demolition	Vendor/Material Hauling	0	0,000	0,000	0,000	0,000	0,000	0,000	0,000	0,000	0,000	0,000	0,000	0,000	0,000	0,000	0,000	0,000	0,000	0,000	0,000	0,000	0,000	0,000	0,000	0,000	0,000
Shared Site Utilities	2032	Demolition	Vendor/Material Hauling	0	0,000	0,000	0,000	0,000	0,000	0,000	0,000	0,000	0,000	0,000	0,000	0,000	0,000	0,000	0,000	0,000	0,000	0,000	0,000	0,000	0,000	0,000	0,000	0,000	0,000
Main Entrance	2024	Site Preparation	Vendor/Material Hauling	0	0,000	0,000	0,000	0,000	0,000	0,000	0,000	0,000	0,000	0,000	0,000	0,000	0,000	0,000	0,000	0,000	0,000	0,000	0,000	0,000	0,000	0,000	0,000	0,000	0,000
New SW Ponds	2024	Site Preparation	Vendor/Material Hauling	0	0,000	0,000	0,000	0,000	0,000	0,000	0,000	0,000	0,000	0,000	0,000	0,000	0,000	0,000	0,000	0,000	0,000	0,000	0,000	0,000	0,000	0,000	0,000	0,000	0,000
Unlined Area Excavation (1 of 3)	2024	Site Preparation	Vendor/Material Hauling	0	0,000	0,000	0,000	0,000	0,000	0,000	0,000	0,000	0,000	0,000	0,000	0,000	0,000	0,000	0,000	0,000	0,000	0,000	0,000	0,000	0,000	0,000	0,000	0,000	0,000
Stockpile Relocation	2024	Site Preparation	Vendor/Material Hauling	0	0,000	0,000	0,000	0,000	0,000	0,000	0,000	0,000	0,000	0,000	0,000	0,000	0,000	0,000	0,000	0,000	0,000	0,000	0,000	0,000	0,000	0,000	0,000	0,000	0,000
Public Area	2026	Site Preparation	Vendor/Material Hauling	0	0,000	0,000	0,000	0,000	0,000	0,000	0,000	0,000	0,000	0,000	0,000	0,000	0,000	0,000	0,000	0,000	0,000	0,000	0,000	0,000	0,000	0,000	0,000	0,000	0,000
Public Area - SW Pond	2026	Site Preparation	Vendor/Material Hauling	0	0,000	0,000	0,000	0,000	0,000	0,000	0,000	0,000	0,000	0,000	0,000	0,000	0,000	0,000	0,000	0,000	0,000	0,000	0,000	0,000	0,000	0,000	0,000	0,000	0,000
Unlined Area Excavation (3 of 3)	2026	Site Preparation	Vendor/Material Hauling	0	0,000	0,000	0,000	0,000	0,000	0,000	0,000	0,000	0,000	0,000	0,000	0,000	0,000	0,000	0,000	0,000	0,000	0,000	0,000	0,000	0,000	0,000	0,000	0,000	0,000
Landfill Construction3	2031	Site Preparation	Vendor/Material Hauling	0	0,000	0,000	0,000	0,000	0,000	0,000	0,000	0,000	0,000	0,000	0,000	0,000	0,000	0,000	0,000	0,000	0,000	0,000	0,000	0,000	0,000	0,000	0,000	0,000	0,000
Landfill Lining & Partial Closure4	2032	Site Preparation	Vendor/Material Hauling	0	0,000	0,000	0,000	0,000	0,000	0,000	0,000	0,000	0,000	0,000	0,000	0,000	0,000	0,000	0,000	0,000	0,000	0,000	0,000	0,000	0,000	0,000	0,000	0,000	0,000
Admin Building	2032	Site Preparation	Vendor/Material Hauling	0	0,000	0,000	0,000	0,000	0,000	0,000	0,000	0,000	0,000	0,000	0,000	0,000	0,000	0,000	0,000	0,000	0,000	0,000	0,000	0,000	0,000	0,000	0,000	0,000	0,000
Recovered Materials Storage	2032	Site Preparation	Vendor/Material Hauling	0	0,000	0,000	0,000	0,000	0,000	0,000	0,000	0,000	0,000	0,000	0,000	0,000	0,000	0,000	0,000	0,000	0,000	0,000	0,000	0,000	0,000	0,000	0,000	0,000	0,000
Shared Site Utilities	2032	Site Preparation	Vendor/Material Hauling	0	0,000	0,000	0,000	0,000	0,000	0,000	0,000	0,000	0,000	0,000	0,000	0,000	0,000	0,000	0,000	0,000	0,000	0,000	0,000	0,000	0,000	0,000	0,000	0,000	0,000
Main Entrance	2024	Grading	Vendor/Material Hauling	0	0,000	0,000	0,000	0,000	0,000	0,000	0,000	0,000	0,000	0,000	0,000	0,000	0,000	0,000	0,000	0,000	0,000	0,000	0,000	0,000	0,000	0,000	0,000	0,000	0,000
New SW Ponds	2024	Grading	Vendor/Material Hauling	0	0,000	0,000	0,000	0,000	0,000	0,000	0,000	0,000	0,000	0,000	0,000	0,000	0,000	0,000	0,000	0,000	0,000	0,000	0,000	0,000	0,000	0,000	0,000	0,000	0,000
Unlined Area Excavation (1 of 3)	2024	Grading	Vendor/Material Hauling	0	0,000	0,000	0,000	0,000	0,000	0,000	0,000	0,000	0,000	0,000	0,000	0,000	0,000	0,000	0,000	0,000	0,000	0,000	0,000	0,000	0,000	0,000	0,000	0,000	0,000
Stockpile Relocation	2024	Grading	Vendor/Material Hauling	0	0,000	0,000	0,000	0,000	0,000	0,000	0,000	0,000	0,000	0,000	0,000	0,000	0,000	0,000	0,000	0,000	0,000	0,000	0,000	0,000	0,000	0,000	0,000	0,000	0,000
Public Area	2026	Grading	Vendor/Material Hauling	0	0,000	0,000	0,000	0,000	0,000	0,000	0,000	0,000	0,000	0,000	0,000	0,000	0,000	0,000	0,000	0,000	0,000	0,000	0,000	0,000	0,000	0,000	0,000	0,000	0,000
Public Area - SW Pond	2026	Grading	Vendor/Material Hauling	0	0,000	0,000	0,000	0,000	0,000	0,000	0,000	0,000	0,000	0,000	0,000	0,000	0,000	0,000	0,000	0,000	0,000	0,000	0,000	0,000	0,000	0,000	0,000	0,000	0,000
Unlined Area Excavation (3 of 3)	2026	Grading	Vendor/Material Hauling	0	0,000	0,000	0,000	0,000	0,000	0,000	0,000	0,000	0,000	0,000	0,000	0,000	0,000	0,000	0,000	0,000	0,000	0,000	0,000	0,000	0,000	0,000	0,000	0,000	0,000
Landfill Construction3	2031	Grading	Vendor/Material Hauling	0	0,000	0,000	0,000	0,000	0,000	0,000	0,000	0,000	0,000	0,000	0,000	0,000	0,000	0,000	0,000	0,000	0,000	0,000	0,000	0,000	0,000	0,000	0,000	0,000	0,000
Landfill Lining & Partial Closure4	2032	Grading	Vendor/Material Hauling	0	0,000	0,000	0,000	0,000	0,000	0,000	0,000	0,000	0,000	0,000	0,000	0,000	0,000	0,000	0,000	0,000	0,000	0,000	0,000	0,000	0,000	0,000	0,000	0,000	0,000
Admin Building	2032	Grading	Vendor/Material Hauling	0	0,000	0,000	0,000	0,000	0,000	0,000	0,000	0,000	0,000	0,000	0,000	0,000	0,000	0,000	0,000	0,000	0,000	0,000	0,000	0,000	0,000	0,000	0,000	0,000	0,000
Recovered Materials Storage	2032	Grading	Vendor/Material Hauling	0	0,000	0,000	0,000	0,000	0,000	0,000	0,000	0,000	0,000	0,000	0,000	0,000	0,000	0,000	0,000	0,000	0,000	0,000	0,000	0,000	0,000	0,000	0,000	0,000	0,000
Shared Site Utilities	2032	Grading	Vendor/Material Hauling	0	0,000	0,000	0,000	0,000	0,000	0,000	0,000	0,000	0,000	0,000	0,000	0,000	0,000	0,000	0,000	0,000	0,000	0,000	0,000	0,000	0,000	0,000	0,000	0,000	0,000
Main Entrance	2024	Building Construction	Vendor/Material Hauling	0	0,000	0,000	0,000	0,000	0,000	0,000	0,000	0,000	0,000	0,000	0,000	0,000	0,000	0,000	0,000	0,000	0,000	0,000	0,000	0,000	0,000	0,000	0,000	0,000	0,000
New SW Ponds	2024	Building Construction	Vendor/Material Hauling	0	0,000	0,000	0,000	0,000	0,000	0,000	0,000	0,000	0,000	0,000	0,000	0,000	0,000	0,000	0,000	0,000	0,000	0,000	0,000	0,000	0,000	0,000	0,000	0,000	0,000
Unlined Area Excavation (1 of 3)	2024	Building Construction	Vendor/Material Hauling	0	0,000	0,000	0,000	0,000	0,000	0,000	0,000	0,000	0,000	0,000	0,000	0,000	0,000	0,000	0,000	0,000	0,000	0,000	0,000	0,000	0,000	0,000	0,000	0,000	0,000
Stockpile Relocation	2024	Building Construction	Vendor/Material Hauling	0	0,000	0,000	0,000	0,000	0,000	0,000	0,000	0,000	0,000	0,000	0,000	0,000	0,000	0,000	0,000	0,000	0,000	0,000	0,000	0,000	0,000	0,000	0,000	0,000	0,000
Public Area	2026	Building Construction	Vendor/Material Hauling	0	0,000	0,000	0,000	0,000	0,000	0,000	0,000	0,000	0,000	0,000	0,000	0,000	0,000	0,000	0,000	0,000	0,000	0,000	0,000	0,000	0,000	0,000	0,000	0,000	0,000
Public Area - SW Pond	2026	Building Construction	Vendor/Material Hauling	0	0,000	0,000	0,000	0,000	0,000	0,000	0,000	0,000	0,000	0,000	0,000	0,000	0,000	0,000	0,000	0,000	0,000	0,000	0,000	0,000	0,000	0,000	0,000	0,000	0,000
Unlined Area Excavation (3 of 3)	2026	Building Construction	Vendor/Material Hauling	0	0,000	0,000	0,000	0,000	0,000	0,000	0,000	0,000	0,000	0,000	0,000	0,000	0,000	0,000	0,000	0,000	0,000	0,000	0,000	0,000	0,000	0,000	0,000	0,000	0,000
Landfill Construction3	2031	Building Construction	Vendor/Material Hauling	0	0,000	0,000	0,000	0,000	0,000	0,000	0,000	0,000	0,000	0,000	0,000	0,000	0,000	0,000	0,000	0,000	0,000	0,000	0,000	0,000	0,000	0,000	0,000	0,000	0,000
Landfill Lining & Partial Closure4	2032	Building Construction	Vendor/Material Hauling	0	0,000	0,000	0,000	0,000	0,000	0,000	0,000	0,000	0,000	0,000	0,000	0,000	0,000	0,000	0,000	0,000	0,000	0,000	0,000	0,000	0,000	0,000	0,000	0,000	0,000
Admin Building	2032	Building Construction	Vendor/Material Hauling	0	0,000	0,000	0,000	0,000	0,000	0,000	0,000	0,000	0,000	0,000	0,000	0,000	0,000	0,000	0,000	0,000	0,000	0,000	0,000	0,000	0,000	0,000	0,000	0,000	0,000
Recovered Materials Storage	2032	Building Construction	Vendor/Material Hauling	0	0,000	0,000	0,000	0,000	0,000	0,000	0,000	0,000	0,000	0,000	0,000	0,000	0,000	0,000	0,000	0,000	0,000	0,000	0,000	0,000	0,000	0,000	0,000	0,000	0,000
Shared Site Utilities	2032	Building Construction	Vendor/Material Hauling	0	0,000	0,000	0,000	0,000	0,000	0,000	0,000	0,000	0,000	0,000	0,000	0,000	0,000	0,000	0,000	0,000	0,000	0,000	0,000	0,000	0,000	0,000	0,000	0,000	0,000
Main Entrance	2024	Paving - Asphalt	Vendor/Material Hauling	0	0,000	0,000	0,000	0,000	0,000	0,000	0,000	0,000	0,000	0,000	0,000	0,000	0,000	0,000	0,000	0,000	0,000	0,000	0,000	0,000	0,000	0,000	0,000	0,000	0,000
New SW Ponds	2024	Paving - Asphalt	Vendor/Material Hauling	0	0,000	0,000	0,000	0,000	0,000	0,000	0,000	0,000	0,000	0,000	0,000	0,000	0,000	0,000	0,000	0,000	0,000	0,000	0,000	0,000	0,000	0,000	0,000	0,000	0,000
Unlined Area Excavation (1 of 3)	2024	Paving - Asphalt	Vendor/Material Hauling	0	0,000	0,000	0,000	0,000	0,000	0,000	0,000	0,000	0,000	0,000	0,000	0,000	0,000	0,000	0,000	0,000	0,000	0,000	0,000	0,000	0,000	0,000	0,000	0,000	0,000
Stockpile Relocation	2024	Paving - Asphalt	Vendor/Material Hauling	0	0,000	0,000	0,000	0,000	0,000	0,000	0,000	0,000	0,000	0,000	0,000	0,000	0,000	0,000	0,000	0,000	0,000	0,000	0,000	0,000	0,000	0,000	0,000	0,000	0,000
Public Area	2026	Paving - Asphalt	Vendor/Material Hauling	0	0,000	0,000	0,000	0,000	0,000	0,000	0,000	0,000	0,000	0,000	0,000	0,000	0,000	0,000	0,000	0,000	0,000	0,000	0,000	0,000	0,000	0,000	0,000

WPWMA EIR
Construction Onroad Emissions
Plan Concept 2

Public Area - SW Pond	2026	Paving - Asphalt	Vendor/Material Hauling	0	0,000	0,000	0,000	0,000	0,000	0,000	0,000	0,000	0,000	0,000	0,000	0,000	0,000	0,000	0,000	0,000	0,000	0,000	0,000	0,000	0,000	0,000	0,000	0,000
Unlined Area Excavation (3 of 3)	2026	Paving - Asphalt	Vendor/Material Hauling	0	0,000	0,000	0,000	0,000	0,000	0,000	0,000	0,000	0,000	0,000	0,000	0,000	0,000	0,000	0,000	0,000	0,000	0,000	0,000	0,000	0,000	0,000	0,000	0,000
Landfill Construction3	2031	Paving - Asphalt	Vendor/Material Hauling	0	0,000	0,000	0,000	0,000	0,000	0,000	0,000	0,000	0,000	0,000	0,000	0,000	0,000	0,000	0,000	0,000	0,000	0,000	0,000	0,000	0,000	0,000	0,000	0,000
Landfill Lining & Partial Closure4	2032	Paving - Asphalt	Vendor/Material Hauling	0	0,000	0,000	0,000	0,000	0,000	0,000	0,000	0,000	0,000	0,000	0,000	0,000	0,000	0,000	0,000	0,000	0,000	0,000	0,000	0,000	0,000	0,000	0,000	0,000
Admin Building	2032	Paving - Asphalt	Vendor/Material Hauling	0	0,000	0,000	0,000	0,000	0,000	0,000	0,000	0,000	0,000	0,000	0,000	0,000	0,000	0,000	0,000	0,000	0,000	0,000	0,000	0,000	0,000	0,000	0,000	0,000
Recovered Materials Storage	2032	Paving - Asphalt	Vendor/Material Hauling	0	0,000	0,000	0,000	0,000	0,000	0,000	0,000	0,000	0,000	0,000	0,000	0,000	0,000	0,000	0,000	0,000	0,000	0,000	0,000	0,000	0,000	0,000	0,000	0,000
Shared Site Utilities	2032	Paving - Asphalt	Vendor/Material Hauling	0	0,000	0,000	0,000	0,000	0,000	0,000	0,000	0,000	0,000	0,000	0,000	0,000	0,000	0,000	0,000	0,000	0,000	0,000	0,000	0,000	0,000	0,000	0,000	0,000
Main Entrance	2024	Paving - Concrete	Vendor/Material Hauling	0	0,000	0,000	0,000	0,000	0,000	0,000	0,000	0,000	0,000	0,000	0,000	0,000	0,000	0,000	0,000	0,000	0,000	0,000	0,000	0,000	0,000	0,000	0,000	0,000
New SW Ponds	2024	Paving - Concrete	Vendor/Material Hauling	0	0,000	0,000	0,000	0,000	0,000	0,000	0,000	0,000	0,000	0,000	0,000	0,000	0,000	0,000	0,000	0,000	0,000	0,000	0,000	0,000	0,000	0,000	0,000	0,000
Unlined Area Excavation (1 of 3)	2024	Paving - Concrete	Vendor/Material Hauling	0	0,000	0,000	0,000	0,000	0,000	0,000	0,000	0,000	0,000	0,000	0,000	0,000	0,000	0,000	0,000	0,000	0,000	0,000	0,000	0,000	0,000	0,000	0,000	0,000
Stockpile Relocation	2024	Paving - Concrete	Vendor/Material Hauling	0	0,000	0,000	0,000	0,000	0,000	0,000	0,000	0,000	0,000	0,000	0,000	0,000	0,000	0,000	0,000	0,000	0,000	0,000	0,000	0,000	0,000	0,000	0,000	0,000
Public Area	2026	Paving - Concrete	Vendor/Material Hauling	0	0,000	0,000	0,000	0,000	0,000	0,000	0,000	0,000	0,000	0,000	0,000	0,000	0,000	0,000	0,000	0,000	0,000	0,000	0,000	0,000	0,000	0,000	0,000	0,000
Public Area - SW Pond	2026	Paving - Concrete	Vendor/Material Hauling	0	0,000	0,000	0,000	0,000	0,000	0,000	0,000	0,000	0,000	0,000	0,000	0,000	0,000	0,000	0,000	0,000	0,000	0,000	0,000	0,000	0,000	0,000	0,000	0,000
Unlined Area Excavation (3 of 3)	2026	Paving - Concrete	Vendor/Material Hauling	0	0,000	0,000	0,000	0,000	0,000	0,000	0,000	0,000	0,000	0,000	0,000	0,000	0,000	0,000	0,000	0,000	0,000	0,000	0,000	0,000	0,000	0,000	0,000	0,000
Landfill Construction3	2031	Paving - Concrete	Vendor/Material Hauling	0	0,000	0,000	0,000	0,000	0,000	0,000	0,000	0,000	0,000	0,000	0,000	0,000	0,000	0,000	0,000	0,000	0,000	0,000	0,000	0,000	0,000	0,000	0,000	0,000
Landfill Lining & Partial Closure4	2032	Paving - Concrete	Vendor/Material Hauling	0	0,000	0,000	0,000	0,000	0,000	0,000	0,000	0,000	0,000	0,000	0,000	0,000	0,000	0,000	0,000	0,000	0,000	0,000	0,000	0,000	0,000	0,000	0,000	0,000
Admin Building	2032	Paving - Concrete	Vendor/Material Hauling	0	0,000	0,000	0,000	0,000	0,000	0,000	0,000	0,000	0,000	0,000	0,000	0,000	0,000	0,000	0,000	0,000	0,000	0,000	0,000	0,000	0,000	0,000	0,000	0,000
Recovered Materials Storage	2032	Paving - Concrete	Vendor/Material Hauling	0	0,000	0,000	0,000	0,000	0,000	0,000	0,000	0,000	0,000	0,000	0,000	0,000	0,000	0,000	0,000	0,000	0,000	0,000	0,000	0,000	0,000	0,000	0,000	0,000
Shared Site Utilities	2032	Paving - Concrete	Vendor/Material Hauling	0	0,000	0,000	0,000	0,000	0,000	0,000	0,000	0,000	0,000	0,000	0,000	0,000	0,000	0,000	0,000	0,000	0,000	0,000	0,000	0,000	0,000	0,000	0,000	0,000
Main Entrance	2024	Site Preparation - Pond	Vendor/Material Hauling	0	0,000	0,000	0,000	0,000	0,000	0,000	0,000	0,000	0,000	0,000	0,000	0,000	0,000	0,000	0,000	0,000	0,000	0,000	0,000	0,000	0,000	0,000	0,000	0,000
New SW Ponds	2024	Site Preparation - Pond	Vendor/Material Hauling	0	0,000	0,000	0,000	0,000	0,000	0,000	0,000	0,000	0,000	0,000	0,000	0,000	0,000	0,000	0,000	0,000	0,000	0,000	0,000	0,000	0,000	0,000	0,000	0,000
Unlined Area Excavation (1 of 3)	2024	Site Preparation - Pond	Vendor/Material Hauling	0	0,000	0,000	0,000	0,000	0,000	0,000	0,000	0,000	0,000	0,000	0,000	0,000	0,000	0,000	0,000	0,000	0,000	0,000	0,000	0,000	0,000	0,000	0,000	0,000
Stockpile Relocation	2024	Site Preparation - Pond	Vendor/Material Hauling	0	0,000	0,000	0,000	0,000	0,000	0,000	0,000	0,000	0,000	0,000	0,000	0,000	0,000	0,000	0,000	0,000	0,000	0,000	0,000	0,000	0,000	0,000	0,000	0,000
Public Area	2026	Site Preparation - Pond	Vendor/Material Hauling	0	0,000	0,000	0,000	0,000	0,000	0,000	0,000	0,000	0,000	0,000	0,000	0,000	0,000	0,000	0,000	0,000	0,000	0,000	0,000	0,000	0,000	0,000	0,000	0,000
Public Area - SW Pond	2026	Site Preparation - Pond	Vendor/Material Hauling	0	0,000	0,000	0,000	0,000	0,000	0,000	0,000	0,000	0,000	0,000	0,000	0,000	0,000	0,000	0,000	0,000	0,000	0,000	0,000	0,000	0,000	0,000	0,000	0,000
Unlined Area Excavation (3 of 3)	2026	Site Preparation - Pond	Vendor/Material Hauling	0	0,000	0,000	0,000	0,000	0,000	0,000	0,000	0,000	0,000	0,000	0,000	0,000	0,000	0,000	0,000	0,000	0,000	0,000	0,000	0,000	0,000	0,000	0,000	0,000
Landfill Construction3	2031	Site Preparation - Pond	Vendor/Material Hauling	0	0,000	0,000	0,000	0,000	0,000	0,000	0,000	0,000	0,000	0,000	0,000	0,000	0,000	0,000	0,000	0,000	0,000	0,000	0,000	0,000	0,000	0,000	0,000	0,000
Landfill Lining & Partial Closure4	2032	Site Preparation - Pond	Vendor/Material Hauling	0	0,000	0,000	0,000	0,000	0,000	0,000	0,000	0,000	0,000	0,000	0,000	0,000	0,000	0,000	0,000	0,000	0,000	0,000	0,000	0,000	0,000	0,000	0,000	0,000
Admin Building	2032	Site Preparation - Pond	Vendor/Material Hauling	0	0,000	0,000	0,000	0,000	0,000	0,000	0,000	0,000	0,000	0,000	0,000	0,000	0,000	0,000	0,000	0,000	0,000	0,000	0,000	0,000	0,000	0,000	0,000	0,000
Recovered Materials Storage	2032	Site Preparation - Pond	Vendor/Material Hauling	0	0,000	0,000	0,000	0,000	0,000	0,000	0,000	0,000	0,000	0,000	0,000	0,000	0,000	0,000	0,000	0,000	0,000	0,000	0,000	0,000	0,000	0,000	0,000	0,000
Shared Site Utilities	2032	Site Preparation - Pond	Vendor/Material Hauling	0	0,000	0,000	0,000	0,000	0,000	0,000	0,000	0,000	0,000	0,000	0,000	0,000	0,000	0,000	0,000	0,000	0,000	0,000	0,000	0,000	0,000	0,000	0,000	0,000
Main Entrance	2024	Excavation	Vendor/Material Hauling	0	0,000	0,000	0,000	0,000	0,000	0,000	0,000	0,000	0,000	0,000	0,000	0,000	0,000	0,000	0,000	0,000	0,000	0,000	0,000	0,000	0,000	0,000	0,000	0,000
New SW Ponds	2024	Excavation	Vendor/Material Hauling	0	0,000	0,000	0,000	0,000	0,000	0,000	0,000	0,000	0,000	0,000	0,000	0,000	0,000	0,000	0,000	0,000	0,000	0,000	0,000	0,000	0,000	0,000	0,000	0,000
Unlined Area Excavation (1 of 3)	2024	Excavation	Vendor/Material Hauling	0	0,000	0,000	0,000	0,000	0,000	0,000	0,000	0,000	0,000	0,000	0,000	0,000	0,000	0,000	0,000	0,000	0,000	0,000	0,000	0,000	0,000	0,000	0,000	0,000
Stockpile Relocation	2024	Excavation	Vendor/Material Hauling	0	0,000	0,000	0,000	0,000	0,000	0,000	0,000	0,000	0,000	0,000	0,000	0,000	0,000	0,000	0,000	0,000	0,000	0,000	0,000	0,000	0,000	0,000	0,000	0,000
Public Area	2026	Excavation	Vendor/Material Hauling	0	0,000	0,000	0,000	0,000	0,000	0,000	0,000	0,000	0,000	0,000	0,000	0,000	0,000	0,000	0,000	0,000	0,000	0,000	0,000	0,000	0,000	0,000	0,000	0,000
Public Area - SW Pond	2026	Excavation	Vendor/Material Hauling	0	0,000	0,000	0,000	0,000	0,000	0,000	0,000	0,000	0,000	0,000	0,000	0,000	0,000	0,000	0,000	0,000	0,000	0,000	0,000	0,000	0,000	0,000	0,000	0,000
Unlined Area Excavation (3 of 3)	2026	Excavation	Vendor/Material Hauling	0	0,000	0,000	0,000	0,000	0,000	0,000	0,000	0,000	0,000	0,000	0,000	0,000	0,000	0,000	0,000	0,000	0,000	0,000	0,000	0,000	0,000	0,000	0,000	0,000
Landfill Construction3	2031	Excavation	Vendor/Material Hauling	0	0,000	0,000	0,000	0,000	0,000	0,000	0,000	0,000	0,000	0,000	0,000	0,000	0,000	0,000	0,000	0,000	0,000	0,000	0,000	0,000	0,000	0,000	0,000	0,000
Landfill Lining & Partial Closure4	2032	Excavation	Vendor/Material Hauling	0	0,000	0,000	0,000	0,000	0,000	0,000	0,000	0,000	0,000	0,000	0,000	0,000	0,000	0,000	0,000	0,000	0,000	0,000	0,000	0,000	0,000	0,000	0,000	0,000
Admin Building	2032	Excavation	Vendor/Material Hauling	0	0,000	0,000	0,000	0,000	0,000	0,000	0,000	0,000	0,000	0,000	0,000	0,000	0,000	0,000	0,000	0,000	0,000	0,000	0,000	0,000	0,000	0,000	0,000	0,000
Recovered Materials Storage	2032	Excavation	Vendor/Material Hauling	0	0,000	0,000	0,000	0,000	0,000	0,000	0,000	0,000	0,000	0,000	0,000	0,000	0,000	0,000	0,000	0,000	0,000	0,000	0,000	0,000	0,000	0,000	0,000	0,000
Shared Site Utilities	2032	Excavation	Vendor/Material Hauling	0	0,000	0,000	0,000	0,000	0,000	0,000	0,000	0,000	0,000	0,000	0,000	0,000	0,000	0,000	0,000	0,000	0,000	0,000	0,000	0,000	0,000	0,000	0,000	0,000
Main Entrance	2024	Lining and Partial Closure	Vendor/Material Hauling	0	0,000	0,000	0,000	0,000	0,000	0,000	0,000	0,000	0,000	0,000	0,000	0,000	0,000	0,000	0,000	0,000	0,000	0,000	0,000	0,000	0,000	0,000	0,000	0,000
New SW Ponds	2024	Lining and Partial Closure	Vendor/Material Hauling	0	0,000	0,000	0,000	0,000	0,000	0,000	0,000	0,000	0,000	0,000	0,000	0,000	0,000	0,000	0,000	0,000	0,000	0,000	0,000	0,000	0,000	0,000	0,000	0,000
Unlined Area Excavation (1 of 3)	2024	Lining and Partial Closure	Vendor/Material Hauling	0	0,000	0,000	0,000	0,000	0,000	0,000	0,000	0,000	0,000	0,000	0,000	0,000	0,000	0,000	0,000	0,000	0,000	0,000	0,000	0,000	0,000	0,000	0,000	0,000
Stockpile Relocation	2024	Lining and Partial Closure	Vendor/Material Hauling	0	0,000	0,000	0,000	0,000	0,000	0,000	0,000	0,000	0,000	0,000	0,000	0,000	0,000	0,000	0,000	0,000	0,000	0,000	0,000	0,000	0,000	0,000	0,000	0,000
Public Area	2026	Lining and Partial Closure	Vendor/Material Hauling	0	0,000	0,000	0,000	0,000	0,000	0,000	0,000	0,000	0,000	0,000	0,000	0,000	0,000	0,000	0,000	0,000	0,000	0,000	0,000	0,000	0,000	0,000	0,000	0,000
Public Area - SW Pond	2026	Lining and Partial Closure	Vendor/Material Hauling	0	0,000	0,000	0,000	0,000	0,000	0,000	0,000	0,000	0,000	0,000	0,000	0,000	0,000	0,000	0,000	0,000	0,000	0,000	0,000	0,000	0,000	0,000	0,000	0,000
Unlined Area Excavation (3 of 3)	2026	Lining and Partial Closure	Vendor/Material Hauling	0	0,000	0,000	0,000	0,000	0,000	0,000	0,000	0,000	0,000	0,000	0,000	0,000	0,000	0,000	0,000	0,000	0,000	0,000	0,000	0,000	0,000	0,000	0,000	0,000
Landfill Construction3	2031	Lining and Partial Closure	Vendor/Material Hauling	0	0,000	0,000	0,000	0,000	0,000	0,000	0,000	0,000	0,000	0,000	0,000	0,000	0,000	0,000	0,000	0,000	0,000	0,000	0,000	0,000	0,000	0,000	0,000	0,000
Landfill Lining & Partial Closure4	2032	Lining and Partial Closure	Vendor/Material Hauling	0	0,000	0,000	0,000	0,000	0,000	0,000	0,000	0,000	0,000	0,000	0,000	0,000	0,000	0,000	0,000	0,000	0,000	0,000	0,000	0,000	0,000	0,000	0,000	0,000
Admin Building	2032	Lining and Partial Closure	Vendor/Material Hauling	0	0,000	0,000	0,000	0,000	0,000	0,000	0,000	0,000	0,000	0,000	0,000	0,000	0,000	0,000	0,000	0,000	0,000	0,000	0,000	0,000	0,000	0,000	0,000	0,000
Recovered Materials Storage	2032	Lining and Partial Closure	Vendor/Material Hauling	0	0,000	0,000	0,000	0,000	0,000	0,000	0,000	0,000	0,000	0,000	0,000	0,000	0,000	0,000	0,000	0,000	0,000	0,000	0,000	0,000	0,000	0,000	0,000	0,000
Shared Site Utilities	2032	Lining and Partial Closure	Vendor/Material Hauling	0	0,000	0,000	0,000	0,000	0,000	0,000	0,000	0,000	0,000	0,000	0,000	0,000	0,000	0,000	0,000	0,000	0,000	0,000	0,000	0,000	0,000	0,000	0,000	0,000
Main Entrance	2024	Stockpile Movement	Vendor/Material Hauling	0	0,000	0,000	0,000	0,000	0,000	0,000	0,000	0,000	0,000	0,000	0,000	0,000	0,000	0,000	0,000	0,000	0,000	0,000	0,000	0,000	0,000	0,000	0,000	0,000
New SW Ponds	2024	Stockpile Movement	Vendor/Material Hauling	0	0,000	0,000	0,000	0,000	0,000	0,000	0,000	0,000	0,000	0,000	0,000	0,000	0,000	0,000	0,000	0,000	0,000	0,000	0,000	0,000	0,000	0,000	0,000	0,000
Unlined Area Excavation (1 of 3)	2024	Stockpile Movement	Vendor/Material Hauling	0	0,000	0,000	0,000	0,000	0,000	0,000	0,000	0,000	0,000	0,000	0,000	0,000	0,000	0,000	0,000	0,000	0,000	0,000	0,000	0,000	0,000	0,000	0,000	0,000
Stockpile Relocation	2024	Stockpile Movement	Vendor/Material Hauling	0	0,000	0,000	0,000	0,000	0,000	0,000	0,000	0,000	0,000	0,000	0,000	0,000	0,000	0,000	0,000	0,000	0,000	0,000	0,000	0,000	0,000	0,000	0,000	0,000
Public Area	2026	Stockpile Movement	Vendor/Material Hauling	0	0,000	0,000	0,000	0,000	0,000	0,000	0,000	0,000	0,000	0,000	0,000	0,000	0,000	0,000	0,000	0,000	0,000	0,000	0,000	0,000	0,000	0,000	0,000	0,000
Public Area - SW Pond	2026	Stockpile Movement	Vendor/Material Hauling	0	0,000	0,000	0,000	0,000	0,000	0,000	0,000	0,000	0,000	0,000	0,000	0,000	0,000	0,000	0,000	0,000	0,000	0,000	0,000	0,000	0,000	0,000	0,000	0,000
Unlined Area Excavation (3 of 3)	2026	Stockpile Movement	Vendor/Material Hauling	0	0,000	0,000	0,000	0,000	0,000	0,000	0,000	0,000	0,000	0,000	0,000	0,000	0,000	0,000	0,000	0,000	0,000	0,000	0,000	0,000	0,000	0,000	0,000	0,000
Landfill Construction3	2031	Stockpile Movement	Vendor/Material Hauling	0	0,000	0,000	0,000	0,000	0,000	0,000	0,000	0,000	0,000	0,000	0,000	0,000	0,000	0,000	0,000	0,000	0,000	0,000	0,000	0,000	0,000	0,000	0,000	0,000
Landfill Lining & Partial Closure4	2032	Stockpile Movement	Vendor/Material Hauling	0	0,000	0,000	0,000	0,000	0,000	0,000	0,000	0,000	0,000	0,000	0,000	0,000	0,000	0,000	0,000	0,000	0,000	0,000	0,000	0,000	0,000	0,000	0,000	0,000
Admin Building	2032	Stockpile Movement	Vendor/Material Hauling	0	0,000	0,000	0,000	0,000	0,000	0,000	0,000	0,000	0,000	0,000	0,000	0,000	0,000	0,000	0,000	0,000	0,000	0,000	0,000	0,000	0,000	0,000	0,000	0,000
Recovered Materials Storage	2032	Stockpile Movement	Vendor/Material Hauling	0	0,000	0,000	0,000	0,000	0,000	0,000	0,000	0,000	0,000	0,000	0,000	0,000	0,000	0,000	0,000	0,000	0,000	0,000	0,000	0,000	0,000	0,000	0,000	0,000
Shared Site Utilities	2032	Stockpile Movement	Vendor/Material Hauling	0	0,000	0,000	0,000	0,000	0,000	0,000	0,000	0,000	0,000	0,000	0,000	0,000	0,000	0,000	0,000	0,000	0,000	0,000	0,000	0,000	0,000	0,000	0,000	0,000

Notes:
[1] The following conversion factors were used to estimate emissions:
1 lb = 453,6 g

WPWMA EIR
Construction Onroad Emissions
Plan Concept 2

Maximum On-Road Vehicle Daily Emissions across all construction phases

Element	Year		Vehicle Type		Maximum Daily Emissions (lb/day) - across all construction phases: Exhaust Emissions (lbs/day) TOG	ROG	CO	NO_X	SO_X	PM_{10}	$PM_{2.5}$	CO_2	CH_4	N_2O	Fugitive Emissions PM_{10}	Fugitive Emissions $PM_{2.5}$	Maximum Daily Emissions (lb/day) - across all construction phases: Total Emissions (lbs/day) TOG	ROG	CO	NO_X	SO_X	PM_{10}	$PM_{2.5}$	CO_2	CH_4	N_2O
Main Entrance	2024		Worker Commute		0,000	0,000	0,000	0,000	0,000	0,000	0,000	0,000	0,000	0,000	0,000	0,000	0,000	0,000	0,000	0,000	0,000	0,000	0,000	0,000	0,000	0,000
New SW Ponds	2024		Worker Commute		0,000	0,000	0,000	0,000	0,000	0,000	0,000	0,000	0,000	0,000	0,000	0,000	0,000	0,000	0,000	0,000	0,000	0,000	0,000	0,000	0,000	0,000
Unlined Area Excavation (1 of 3)	2024		Worker Commute		0,000	0,000	0,000	0,000	0,000	0,000	0,000	0,000	0,000	0,000	0,000	0,000	0,000	0,000	0,000	0,000	0,000	0,000	0,000	0,000	0,000	0,000
Stockpile Relocation	2024		Worker Commute		0,000	0,000	0,000	0,000	0,000	0,000	0,000	0,000	0,000	0,000	0,000	0,000	0,000	0,000	0,000	0,000	0,000	0,000	0,000	0,000	0,000	0,000
Public Area	2026		Worker Commute		0,000	0,000	0,000	0,000	0,000	0,000	0,000	0,000	0,000	0,000	0,000	0,000	0,000	0,000	0,000	0,000	0,000	0,000	0,000	0,000	0,000	0,000
Public Area - SW Pond	2026		Worker Commute		0,000	0,000	0,000	0,000	0,000	0,000	0,000	0,000	0,000	0,000	0,000	0,000	0,000	0,000	0,000	0,000	0,000	0,000	0,000	0,000	0,000	0,000
Unlined Area Excavation (3 of 3)	2026		Worker Commute		0,000	0,000	0,000	0,000	0,000	0,000	0,000	0,000	0,000	0,000	0,000	0,000	0,000	0,000	0,000	0,000	0,000	0,000	0,000	0,000	0,000	0,000
Landfill Construction3	2031		Worker Commute		0,000	0,000	0,000	0,000	0,000	0,000	0,000	0,000	0,000	0,000	0,000	0,000	0,000	0,000	0,000	0,000	0,000	0,000	0,000	0,000	0,000	0,000
Landfill Lining & Partial Closure4	2032		Worker Commute		0,000	0,000	0,000	0,000	0,000	0,000	0,000	0,000	0,000	0,000	0,000	0,000	0,000	0,000	0,000	0,000	0,000	0,000	0,000	0,000	0,000	0,000
Admin Building	2032		Worker Commute		0,000	0,000	0,000	0,000	0,000	0,000	0,000	0,000	0,000	0,000	0,000	0,000	0,000	0,000	0,000	0,000	0,000	0,000	0,000	0,000	0,000	0,000
Recovered Materials Storage	2032		Worker Commute		0,000	0,000	0,000	0,000	0,000	0,000	0,000	0,000	0,000	0,000	0,000	0,000	0,000	0,000	0,000	0,000	0,000	0,000	0,000	0,000	0,000	0,000
Shared Site Utilities	2032		Worker Commute		0,000	0,000	0,000	0,000	0,000	0,000	0,000	0,000	0,000	0,000	0,000	0,000	0,000	0,000	0,000	0,000	0,000	0,000	0,000	0,000	0,000	0,000
Main Entrance	2024		Vendor/Material Hauling		0,000	0,000	0,000	0,000	0,000	0,000	0,000	0,000	0,000	0,000	0,000	0,000	0,000	0,000	0,000	0,000	0,000	0,000	0,000	0,000	0,000	0,000
New SW Ponds	2024		Vendor/Material Hauling		0,000	0,000	0,000	0,000	0,000	0,000	0,000	0,000	0,000	0,000	0,000	0,000	0,000	0,000	0,000	0,000	0,000	0,000	0,000	0,000	0,000	0,000
Unlined Area Excavation (1 of 3)	2024		Vendor/Material Hauling		0,000	0,000	0,000	0,000	0,000	0,000	0,000	0,000	0,000	0,000	0,000	0,000	0,000	0,000	0,000	0,000	0,000	0,000	0,000	0,000	0,000	0,000
Stockpile Relocation	2024		Vendor/Material Hauling		0,000	0,000	0,000	0,000	0,000	0,000	0,000	0,000	0,000	0,000	0,000	0,000	0,000	0,000	0,000	0,000	0,000	0,000	0,000	0,000	0,000	0,000
Public Area	2026		Vendor/Material Hauling		0,000	0,000	0,000	0,000	0,000	0,000	0,000	0,000	0,000	0,000	0,000	0,000	0,000	0,000	0,000	0,000	0,000	0,000	0,000	0,000	0,000	0,000
Public Area - SW Pond	2026		Vendor/Material Hauling		0,000	0,000	0,000	0,000	0,000	0,000	0,000	0,000	0,000	0,000	0,000	0,000	0,000	0,000	0,000	0,000	0,000	0,000	0,000	0,000	0,000	0,000
Unlined Area Excavation (3 of 3)	2026		Vendor/Material Hauling		0,000	0,000	0,000	0,000	0,000	0,000	0,000	0,000	0,000	0,000	0,000	0,000	0,000	0,000	0,000	0,000	0,000	0,000	0,000	0,000	0,000	0,000
Landfill Construction3	2031		Vendor/Material Hauling		0,000	0,000	0,000	0,000	0,000	0,000	0,000	0,000	0,000	0,000	0,000	0,000	0,000	0,000	0,000	0,000	0,000	0,000	0,000	0,000	0,000	0,000
Landfill Lining & Partial Closure4	2032		Vendor/Material Hauling		0,000	0,000	0,000	0,000	0,000	0,000	0,000	0,000	0,000	0,000	0,000	0,000	0,000	0,000	0,000	0,000	0,000	0,000	0,000	0,000	0,000	0,000
Admin Building	2032		Vendor/Material Hauling		0,000	0,000	0,000	0,000	0,000	0,000	0,000	0,000	0,000	0,000	0,000	0,000	0,000	0,000	0,000	0,000	0,000	0,000	0,000	0,000	0,000	0,000
Recovered Materials Storage	2032		Vendor/Material Hauling		0,000	0,000	0,000	0,000	0,000	0,000	0,000	0,000	0,000	0,000	0,000	0,000	0,000	0,000	0,000	0,000	0,000	0,000	0,000	0,000	0,000	0,000
Shared Site Utilities	2032		Vendor/Material Hauling		0,000	0,000	0,000	0,000	0,000	0,000	0,000	0,000	0,000	0,000	0,000	0,000	0,000	0,000	0,000	0,000	0,000	0,000	0,000	0,000	0,000	0,000

Note: Assumes element and associated stormwater pond are built concurrently, as opposed to sequentially.

Total Maximum On-Road Vehicle Daily Emissions across all construction phases (worker commute + vendor/material

Element	Year		Maximum Daily Emissions (lb/day) - across all construction phases: Exhaust Emissions (lbs/day) TOG	ROG	CO	NO_X	SO_X	PM_{10}	$PM_{2.5}$	CO_2	CH_4	N_2O	Fugitive Emissions PM_{10}	Fugitive Emissions $PM_{2.5}$	Maximum Daily Emissions (lb/day) - across all construction phases: Total Emissions (lbs/day) TOG	ROG	CO	NO_X	SO_X	PM_{10}	$PM_{2.5}$	CO_2	CH_4	N_2O
Main Entrance	2024		0,000	0,000	0,000	0,000	0,000	0,000	0,000	0,000	0,000	0,000	0,000	0,000	0,000	0,000	0,000	0,000	0,000	0,000	0,000	0,000	0,000	0,000
New SW Ponds	2024		0,000	0,000	0,000	0,000	0,000	0,000	0,000	0,000	0,000	0,000	0,000	0,000	0,000	0,000	0,000	0,000	0,000	0,000	0,000	0,000	0,000	0,000
Unlined Area Excavation (1 of 3)	2024		0,000	0,000	0,000	0,000	0,000	0,000	0,000	0,000	0,000	0,000	0,000	0,000	0,000	0,000	0,000	0,000	0,000	0,000	0,000	0,000	0,000	0,000
Stockpile Relocation	2024		0,000	0,000	0,000	0,000	0,000	0,000	0,000	0,000	0,000	0,000	0,000	0,000	0,000	0,000	0,000	0,000	0,000	0,000	0,000	0,000	0,000	0,000
Public Area	2026		0,000	0,000	0,000	0,000	0,000	0,000	0,000	0,000	0,000	0,000	0,000	0,000	0,000	0,000	0,000	0,000	0,000	0,000	0,000	0,000	0,000	0,000
Public Area - SW Pond	2026		0,000	0,000	0,000	0,000	0,000	0,000	0,000	0,000	0,000	0,000	0,000	0,000	0,000	0,000	0,000	0,000	0,000	0,000	0,000	0,000	0,000	0,000
Unlined Area Excavation (3 of 3)	2026		0,000	0,000	0,000	0,000	0,000	0,000	0,000	0,000	0,000	0,000	0,000	0,000	0,000	0,000	0,000	0,000	0,000	0,000	0,000	0,000	0,000	0,000
Landfill Construction3	2031		0,000	0,000	0,000	0,000	0,000	0,000	0,000	0,000	0,000	0,000	0,000	0,000	0,000	0,000	0,000	0,000	0,000	0,000	0,000	0,000	0,000	0,000
Landfill Lining & Partial Closure4	2032		0,000	0,000	0,000	0,000	0,000	0,000	0,000	0,000	0,000	0,000	0,000	0,000	0,000	0,000	0,000	0,000	0,000	0,000	0,000	0,000	0,000	0,000
Admin Building	2032		0,000	0,000	0,000	0,000	0,000	0,000	0,000	0,000	0,000	0,000	0,000	0,000	0,000	0,000	0,000	0,000	0,000	0,000	0,000	0,000	0,000	0,000
Recovered Materials Storage	2032		0,000	0,000	0,000	0,000	0,000	0,000	0,000	0,000	0,000	0,000	0,000	0,000	0,000	0,000	0,000	0,000	0,000	0,000	0,000	0,000	0,000	0,000
Shared Site Utilities	2032		0,000	0,000	0,000	0,000	0,000	0,000	0,000	0,000	0,000	0,000	0,000	0,000	0,000	0,000	0,000	0,000	0,000	0,000	0,000	0,000	0,000	0,000

Maximum Daily On-Road Vehicle Emissions per Construction Year

Year		Maximum Daily Emissions (lb/day) - across all construction phases: Exhaust Emissions (lbs/day) TOG	ROG	CO	NO_X	SO_X	PM_{10}	$PM_{2.5}$	CO_2	CH_4	N_2O	Fugitive Emissions PM_{10}	Fugitive Emissions $PM_{2.5}$	Maximum Daily Emissions (lb/day) - across all construction phases: Total Emissions (lbs/day) TOG	ROG	CO	NO_X	SO_X	PM_{10}	$PM_{2.5}$	CO_2	CH_4	N_2O
2024		0,000	0,000	0,000	0,000	0,000	0,000	0,000	0,000	0,000	0,000	0,000	0,000	0,000	0,000	0,000	0,000	0,000	0,000	0,000	0,000	0,000	0,000
2026		0,000	0,000	0,000	0,000	0,000	0,000	0,000	0,000	0,000	0,000	0,000	0,000	0,000	0,000	0,000	0,000	0,000	0,000	0,000	0,000	0,000	0,000
2031		0,000	0,000	0,000	0,000	0,000	0,000	0,000	0,000	0,000	0,000	0,000	0,000	0,000	0,000	0,000	0,000	0,000	0,000	0,000	0,000	0,000	0,000
2032		0,000	0,000	0,000	0,000	0,000	0,000	0,000	0,000	0,000	0,000	0,000	0,000	0,000	0,000	0,000	0,000	0,000	0,000	0,000	0,000	0,000	0,000

Total Annual GHG (lb/yr)

Year	CO2	CH4	N_2O
2024	0	0,00	0,00
2026	0	0,00	0,00
2031	0	0,00	0,00
2032	0	0,00	0,00

WPWMA EIR
Construction Emissions - Proposed Project Fugitive Emissions From Activities
Plan Concept 1

= manual input

Grading Assumptions

Equipment Type	Acres/8hr-day
Rubber Tired Dozers	0,5
Concrete/Industrial Saws	0
Crawler Tractors	0,5
Graders	0,5
Excavators	0
Scrapers	1

Variable	Value	Unit	
Mean Vehicle Speed, S	7,1	mph	AP-42 default is 7.1 mph
PM2.5 Scaling Factor, $F_{PM2.5}$	0,031		AP-42 default is 0.031
PM10 Scaling Factor, F_{PM10}	0,6		AP-42 default is 0.6
Blade Width	12	ft	CalEEMod default is 12 ft based on CAT 140 Motor Grader
Emission Factor PM15, EF_{PM15}	2,571	lb/VMT	$EF_{PM15} = 0.051 \times (S)^{2.0}$
Emission Factor TSP, EF_{TSP}	5,373	lb/VMT	$EF_{TSP} = 0.04 \times (S)^{2.5}$
Emission Factor PM10, EF_{PM10}	1,543	lb/VMT	$EF_{PM10} = EF_{PM15} \times F_{PM10}$
Emission Factor PM2.5, $EF_{PM2.5}$	0,167	lb/VMT	$EF_{PM2.5} = EF_{TSP} \times F_{PM2.5}$
			E = EF x VMT

	Number of Equipment in Grading Phase											
Equipment Type	Public Area	Public Area - SW Pond	Western Entrance	Shared Site Utilities	Compost Facility	Compost Facility - SW Pond	Landfill Construction	Landfill Lining & Partial Closure	Recovered Materials Storage	HHW Storage	Primary Maintenance Facility	Stockpile Relocation
Rubber Tired Dozers	1	N/A	1	1	1	N/A	1	2	1	1	1	0
Concrete/Industrial Saws	0	N/A	0	0	0	N/A	0	0	0	1	0	0
Tractors/Loaders/Backhoes	2	N/A	1	1	2	N/A	2	2	1	2	1	0
Graders	1	N/A	1	1	1	N/A	1	1	1	0	1	0
Excavators	2	N/A	0	0	2	N/A	2	1	0	0	0	0
Scrapers	2	N/A	0	0	2	N/A	2	3	0	0	0	0

Note: Landfill Lining & Partial Closure column shows number of equipment for Lining & Partial Closure phase, not Grading phase.

		Maximum Daily Emissions (lb/day) - across all construction phases					
		Uncontrolled Emissions			Controlled Emissions		
Element	Year	PM_{10}	$PM_{2.5}$	ROG	PM_{10}	$PM_{2.5}$	ROG
Public Area	2024	11,40	15,74	1,18	2,85	3,93	1,18
Public Area - SW Pond	2024	3,32	4,59	0,00	0,83	1,15	0,00
Western Entrance	2024	3,32	4,59	0,52	0,83	1,15	0,52
Shared Site Utilities	2024	3,32	4,59	0,00	0,83	1,15	0,00
Compost Facility	2025	11,40	15,74	0,00	2,85	3,93	0,00
Compost Facility - SW Pond	2025	11,40	15,74	0,00	2,85	3,93	0,00
Landfill Construction	2028	11,40	15,74	0,00	2,85	3,93	0,00
Landfill Lining & Partial Closure	2029	7,60	10,49	0,00	1,90	2,62	0,00
Recovered Materials Storage	2029	3,32	4,59	0,26	0,83	1,15	0,26
HHW Storage	2029	1,59	0,17	0,00	0,40	0,04	0,00
Primary Maintenance Facility	2033	3,32	4,59	0,52	0,83	1,15	0,52
Stockpile Relocation	2033	0,61	0,09	0,00	0,15	0,02	0,00

Note: Assumes element and associated stormwater pond are built concurrently, as opposed to sequentially.

	Maximum Daily Emissions (lb/day) - across all construction phases					
	Uncontrolled Emissions			Controlled Emissions		
Year	PM_{10}	$PM_{2.5}$	ROG	PM_{10}	$PM_{2.5}$	ROG
2024	21,37	29,51	1,70	5,34	7,38	1,70
2025	22,80	31,48	0,00	5,70	7,87	0,00
2028	11,40	15,74	0,00	2,85	3,93	0,00
2029	12,51	15,26	0,26	3,13	3,81	0,26
2033	3,93	4,68	0,52	0,98	1,17	0,52

WPWMA EIR
Construction Emissions - Proposed Project Fugitive Emissions From Activities
Plan Concept 1

Bulldozing Assumptions

Variable	Value	Unit	
C (TSP)	5,7		AP-42 constant for overburden
C (PM15)	1		AP-42 constant for overburden
Material Moisture Content, M	7,90%		AP-42 constant for overburden
Material Silt Content, s	6,90%		AP-42 constant for overburden
PM10 Scaling Factor, F_{PM10}	0,75		AP-42 constant for overburden
PM2.5 Scaling Factor, $F_{PM2.5}$	0,105		AP-42 constant for overburden
Emission Factor PM15, EF_{PM15}	0,633	lb/hr	$EF_{PM15} = (C_{PM15} \times s^{1.5}) / M^{1.4}$
Emission Factor TSP, EF_{TSP}	6,246	lb/hr	$EF_{TSP} = (C_{TSP} \times s^{1.2}) / M^{1.3}$
Emission Factor PM10, EF_{PM10}	0,475	lb/hr	$EF_{PM10} = EF_{PM15} \times F_{PM10}$
Emission Factor PM2.5, $EF_{PM2.5}$	0,656	lb/hr	$EF_{PM2.5} = EF_{TSP} \times F_{PM2.5}$
			E = EF x Hr

	Number of Equipment-Hours Per Day in Site Preparation Phase											
Equipment Type	Public Area	Public Area - SW Pond	Western Entrance	Shared Site Utilities	Compost Facility	Compost Facility - SW Pond	Landfill Construction	Landfill Lining & Partial Closure	Recovered Materials Storage	HHW Storage	Primary Maintenance Facility	Stockpile Relocation
Graders	0	8	8	8	0	0	0	8	8	8	8	0
Tractors/Loaders/Backhoes	32	8	8	8	32	32	32	12	8	8	8	0
Rubber Tired Dozers	24	7	7	7	24	24	24	16	7	0	7	0
Scrapers	0	0	0	0	0	0	0	24	0	0	0	0

Note: Landfill Lining & Partial Closure column shows equipment-hours for Lining & Partial Closure phase, not Site Preparation phase.

Truck Loading Assumptions

Variable	Value	Unit	
Particle size multiplier, $k_{PM2.5}$	0,053		AP-42 default is 0.053
Particle size multiplier, k_{PM10}	0,35		AP-42 default is 0.35
Wind speed, U	4,917	mph	Based on CalEEMod default of 2.2 m/s for Placer County - Sacramento
Material moisture content, M	12	%	AP-42 default is 12%
Density	1,264	tons/cy	Based on CalEEMod assumption of 1.264 tons per cubic yard
Emission Factor PM2.5, $EF_{PM2.5}$	1,35E-05	lb/ton	$EF_{PM2.5} = k \times (0.0032) \times [(U/5)^{1.3} / (M/2)^{1.4}]$
Emission Factor PM10, EF_{PM10}	8,92E-05	lb/ton	$EF_{PM10} = k \times (0.0032) \times [(U/5)^{1.3} / (M/2)^{1.4}]$
			E = EF x Throughput

Throughput	Public Area	Public Area - SW Pond	Western Entrance	Shared Site Utilities	Compost Facility	Compost Facility - SW Pond	Landfill Construction	Landfill Lining & Partial Closure	Recovered Materials Storage	HHW Storage	Primary Maintenance Facility	Stockpile Relocation
Excavation Volume (cy)	0	9 735	0	16 000	0	31 241	1 835 000	131 750	0	0	0	1 400 000
Excavation Days (days)	0	1	0	2	0	3	175	13	0	0	0	260

Asphalt Paving Assumptions

Variable	Value	Unit	
Emission Factor ROG, EF_{ROG}	2,62	lb/ac	CalEEMod uses SMAQMD default of 2.62 lb/ac
			E = EF x Area

Asphalt	Public Area	Public Area - SW Pond	Western Entrance	Shared Site Utilities	Compost Facility	Compost Facility - SW Pond	Landfill Construction	Landfill Lining & Partial Closure	Recovered Materials Storage	HHW Storage	Primary Maintenance Facility	Stockpile Relocation
Paved Asphalt Area (ac)	9	0	2	0	0	0	0	0	1	0	2	0
Paving Days (days)	20	0	10	0	0	0	0	0	10	0	10	0

General Assumptions

Construction Schedule	Operational Schedule	Unit
8	8	hr/day
5	5	days/week
4	(52 weeks / yr)	weeks/month

Control Measures

Measure	Control Efficiency	Applicable Source	Reference
Apply water every 3 hours to distrubed areas within construction site.	75,00%	Watering of fugitve dust activity	Sacramento Metropolitan Air Quality Management District (SMAQMD). 2015. CEQA Guide. June.
Total Control Efficiency	75,00%	Excavation / Grading	

WPWMA EIR
Construction Emissions - Proposed Project Fugitive Emissions From Activities
Plan Concept 1

Public Area

Schedule (days/yr)	Year
260	2024

		Fugitive Particulate Emissions						ROG Emissions			Controlled Emissions: Fugitive Particulate Emissions						Controlled Emissions: ROG Emissions		
		(lb/day)		(lb/hr)		(lb/yr)		(lb/day)	(lb/hr)	(lb/yr)	(lb/day)		(lb/hr)		(lb/yr)		(lb/day)	(lb/hr)	(lb/yr)
Activity	Max. Activity per day	PM_{10}	$PM_{2.5}$	PM_{10}	$PM_{2.5}$	PM_{10}	$PM_{2.5}$	ROG	ROG	ROG	PM_{10}	$PM_{2.5}$	PM_{10}	$PM_{2.5}$	PM_{10}	$PM_{2.5}$	ROG	ROG	ROG
Grading (acres/day)	4,0	4,24	0,46	0,53	0,06	1 102,92	119,09	0,00	0,00	0,00	1,06	0,11	0,13	0,01	275,73	29,77	0,00	0,00	0,00
Bulldozing (hr/day)	24	11,40	15,74	1,42	1,97	2 963,75	4 092,16	0,00	0,00	0,00	2,85	3,93	0,36	0,49	740,94	1 023,04	0,00	0,00	0,00
Truck Loading (cy/day)	0	0,00	0,00	0,00	0,00	0,00	0,00	0,00	0,00	0,00	0,00	0,00	0,00	0,00	0,00	0,00	0,00	0,00	0,00
Paving (acres/day)	0,5	N/A	N/A	N/A	N/A	N/A	N/A	1,18	0,15	306,54	N/A	N/A	N/A	N/A	N/A	N/A	N/A	N/A	N/A
Total [13]		**15,64**	**16,20**	**1,96**	**2,02**	**4 066,67**	**4 211,25**	**1,18**	**0,15**	**306,54**	**3,91**	**4,05**	**0,49**	**0,51**	**1 016,67**	**1 052,81**	**N/A**	**N/A**	**N/A**

Public Area - SW Pond

Schedule (days/yr)	Year
260	2024

		Fugitive Particulate Emissions						ROG Emissions			Controlled Emissions: Fugitive Particulate Emissions						Controlled Emissions: ROG Emissions		
		(lb/day)		(lb/hr)		(lb/yr)		(lb/day)	(lb/hr)	(lb/yr)	(lb/day)		(lb/hr)		(lb/yr)		(lb/day)	(lb/hr)	(lb/yr)
Activity	Max. Activity per day	PM_{10}	$PM_{2.5}$	PM_{10}	$PM_{2.5}$	PM_{10}	$PM_{2.5}$	ROG	ROG	ROG	PM_{10}	$PM_{2.5}$	PM_{10}	$PM_{2.5}$	PM_{10}	$PM_{2.5}$	ROG	ROG	ROG
Grading (acres/day)	0,0	0,00	0,00	0,00	0,00	0,00	0,00	0,00	0,00	0,00	0,00	0,00	0,00	0,00	0,00	0,00	0,00	0,00	0,00
Bulldozing (hr/day)	7	3,32	4,59	0,42	0,57	864,43	1 193,55	0,00	0,00	0,00	0,83	1,15	0,10	0,14	216,11	298,39	0,00	0,00	0,00
Truck Loading (cy/day)	9 735	1,10	0,17	0,14	0,02	285,43	43,22	0,00	0,00	0,00	0,27	0,04	0,03	0,01	71,36	10,81	0,00	0,00	0,00
Paving (acres/day)	0,0	N/A	N/A	N/A	N/A	N/A	N/A	0,00	0,00	0,00	N/A	N/A	N/A	N/A	N/A	N/A	N/A	N/A	N/A
Total [13]		**4,42**	**4,76**	**0,55**	**0,59**	**1 149,86**	**1 236,77**	**0,00**	**0,00**	**0,00**	**1,11**	**1,19**	**0,14**	**0,15**	**287,46**	**309,19**	**N/A**	**N/A**	**N/A**

Western Entrance

Schedule (days/yr)	Year
260	2024

		Fugitive Particulate Emissions						ROG Emissions			Controlled Emissions: Fugitive Particulate Emissions						Controlled Emissions: ROG Emissions		
		(lb/day)		(lb/hr)		(lb/yr)		(lb/day)	(lb/hr)	(lb/yr)	(lb/day)		(lb/hr)		(lb/yr)		(lb/day)	(lb/hr)	(lb/yr)
Activity	Max. Activity per day	PM_{10}	$PM_{2.5}$	PM_{10}	$PM_{2.5}$	PM_{10}	$PM_{2.5}$	ROG	ROG	ROG	PM_{10}	$PM_{2.5}$	PM_{10}	$PM_{2.5}$	PM_{10}	$PM_{2.5}$	ROG	ROG	ROG
Grading (acres/day)	1,5	1,59	0,17	0,20	0,02	413,60	44,66	0,00	0,00	0,00	0,40	0,04	0,05	0,01	103,40	11,16	0,00	0,00	0,00
Bulldozing (hr/day)	7	3,32	4,59	0,42	0,57	864,43	1 193,55	0,00	0,00	0,00	0,83	1,15	0,10	0,14	216,11	298,39	0,00	0,00	0,00
Truck Loading (cy/day)	0	0,00	0,00	0,00	0,00	0,00	0,00	0,00	0,00	0,00	0,00	0,00	0,00	0,00	0,00	0,00	0,00	0,00	0,00
Paving (acres/day)	0,2	N/A	N/A	N/A	N/A	N/A	N/A	0,52	0,07	136,24	N/A	N/A	N/A	N/A	N/A	N/A	N/A	N/A	N/A
Total [13]		**4,92**	**4,76**	**0,61**	**0,60**	**1 278,02**	**1 238,20**	**0,52**	**0,07**	**136,24**	**1,23**	**1,19**	**0,15**	**0,15**	**319,51**	**309,55**	**N/A**	**N/A**	**N/A**

Shared Site Utilities

Schedule (days/yr)	Year
260	2024

		Fugitive Particulate Emissions						ROG Emissions			Controlled Emissions: Fugitive Particulate Emissions						Controlled Emissions: ROG Emissions		
		(lb/day)		(lb/hr)		(lb/yr)		(lb/day)	(lb/hr)	(lb/yr)	(lb/day)		(lb/hr)		(lb/yr)		(lb/day)	(lb/hr)	(lb/yr)
Activity	Max. Activity per day	PM_{10}	$PM_{2.5}$	PM_{10}	$PM_{2.5}$	PM_{10}	$PM_{2.5}$	ROG	ROG	ROG	PM_{10}	$PM_{2.5}$	PM_{10}	$PM_{2.5}$	PM_{10}	$PM_{2.5}$	ROG	ROG	ROG
Grading (acres/day)	1,5	1,59	0,17	0,20	0,02	413,60	44,66	0,00	0,00	0,00	0,40	0,04	0,05	0,01	103,40	11,16	0,00	0,00	0,00
Bulldozing (hr/day)	7	3,32	4,59	0,42	0,57	864,43	1 193,55	0,00	0,00	0,00	0,83	1,15	0,10	0,14	216,11	298,39	0,00	0,00	0,00
Truck Loading (cy/day)	8 000	0,90	0,14	0,11	0,02	234,56	35,52	0,00	0,00	0,00	0,23	0,03	0,03	0,00	58,64	8,88	0,00	0,00	0,00
Paving (acres/day)	0,0	N/A	N/A	N/A	N/A	N/A	N/A	0,00	0,00	0,00	N/A	N/A	N/A	N/A	N/A	N/A	N/A	N/A	N/A
Total [13]		**5,82**	**4,90**	**0,73**	**0,61**	**1 512,58**	**1 273,72**	**0,00**	**0,00**	**0,00**	**1,45**	**1,22**	**0,18**	**0,15**	**378,15**	**318,43**	**N/A**	**N/A**	**N/A**

Compost Facility

Schedule (days/yr)	Year
260	2025

		Fugitive Particulate Emissions						ROG Emissions			Controlled Emissions: Fugitive Particulate Emissions						Controlled Emissions: ROG Emissions		
		(lb/day)		(lb/hr)		(lb/yr)		(lb/day)	(lb/hr)	(lb/yr)	(lb/day)		(lb/hr)		(lb/yr)		(lb/day)	(lb/hr)	(lb/yr)
Activity	Max. Activity per day	PM_{10}	$PM_{2.5}$	PM_{10}	$PM_{2.5}$	PM_{10}	$PM_{2.5}$	ROG	ROG	ROG	PM_{10}	$PM_{2.5}$	PM_{10}	$PM_{2.5}$	PM_{10}	$PM_{2.5}$	ROG	ROG	ROG
Grading (acres/day)	4,0	4,24	0,46	0,53	0,06	1 102,92	119,09	0,00	0,00	0,00	1,06	0,11	0,13	0,01	275,73	29,77	0,00	0,00	0,00
Bulldozing (hr/day)	24	11,40	15,74	1,42	1,97	2 963,75	4 092,16	0,00	0,00	0,00	2,85	3,93	0,36	0,49	740,94	1 023,04	0,00	0,00	0,00
Truck Loading (cy/day)	0	0,00	0,00	0,00	0,00	0,00	0,00	0,00	0,00	0,00	0,00	0,00	0,00	0,00	0,00	0,00	0,00	0,00	0,00
Paving (acres/day)	0,0	N/A	N/A	N/A	N/A	N/A	N/A	0,00	0,00	0,00	N/A	N/A	N/A	N/A	N/A	N/A	N/A	N/A	N/A
Total [13]		**15,64**	**16,20**	**1,96**	**2,02**	**4 066,67**	**4 211,25**	**0,00**	**0,00**	**0,00**	**3,91**	**4,05**	**0,49**	**0,51**	**1 016,67**	**1 052,81**	**N/A**	**N/A**	**N/A**

WPWMA EIR
Construction Emissions - Proposed Project Fugitive Emissions From Activities
Plan Concept 1

Compost Facility - SW Pond

Schedule (days/yr)	Year
260	2025

		Fugitive Particulate Emissions						ROG Emissions			Controlled Emissions: Fugitive Particulate Emissions						Controlled Emissions: ROG Emissions		
		(lb/day)		(lb/hr)		(lb/yr)		(lb/day)	(lb/hr)	(lb/yr)	(lb/day)		(lb/hr)		(lb/yr)		(lb/day)	(lb/hr)	(lb/yr)
Activity	Max. Activity per day	PM_{10}	$PM_{2.5}$	PM_{10}	$PM_{2.5}$	PM_{10}	$PM_{2.5}$	ROG	ROG	ROG	PM_{10}	$PM_{2.5}$	PM_{10}	$PM_{2.5}$	PM_{10}	$PM_{2.5}$	ROG	ROG	ROG
Grading (acres/day)	0,0	0,00	0,00	0,00	0,00	0,00	0,00	0,00	0,00	0,00	0,00	0,00	0,00	0,00	0,00	0,00	0,00	0,00	0,00
Bulldozing (hr/day)	24	11,40	15,74	1,42	1,97	2 963,75	4 092,16	0,00	0,00	0,00	2,85	3,93	0,36	0,49	740,94	1 023,04	0,00	0,00	0,00
Truck Loading (cy/day)	10 414	1,17	0,18	0,15	0,02	305,33	46,24	0,00	0,00	0,00	0,29	0,04	0,04	0,01	76,33	11,56	0,00	0,00	0,00
Paving (acres/day)	0,0	N/A	N/A	N/A	N/A	N/A	N/A	0,00	0,00	0,00	N/A	N/A	N/A	N/A	N/A	N/A	N/A	N/A	N/A
Total [13]		**12,57**	**15,92**	**1,57**	**1,99**	**3 269,08**	**4 138,39**	**0,00**	**0,00**	**0,00**	**3,14**	**3,98**	**0,39**	**0,50**	**817,27**	**1 034,60**	**N/A**	**N/A**	**N/A**

Landfill Construction

Schedule (days/yr)	Year
260	2028

		Fugitive Particulate Emissions						ROG Emissions			Controlled Emissions: Fugitive Particulate Emissions						Controlled Emissions: ROG Emissions		
		(lb/day)		(lb/hr)		(lb/yr)		(lb/day)	(lb/hr)	(lb/yr)	(lb/day)		(lb/hr)		(lb/yr)		(lb/day)	(lb/hr)	(lb/yr)
Activity	Max. Activity per day	PM_{10}	$PM_{2.5}$	PM_{10}	$PM_{2.5}$	PM_{10}	$PM_{2.5}$	ROG	ROG	ROG	PM_{10}	$PM_{2.5}$	PM_{10}	$PM_{2.5}$	PM_{10}	$PM_{2.5}$	ROG	ROG	ROG
Grading (acres/day)	4,0	4,24	0,46	0,53	0,06	1 102,92	119,09	0,00	0,00	0,00	1,06	0,11	0,13	0,01	275,73	29,77	0,00	0,00	0,00
Bulldozing (hr/day)	24	11,40	15,74	1,42	1,97	2 963,75	4 092,16	0,00	0,00	0,00	2,85	3,93	0,36	0,49	740,94	1 023,04	0,00	0,00	0,00
Truck Loading (cy/day)	10 486	1,18	0,18	0,15	0,02	307,44	46,56	0,00	0,00	0,00	0,30	0,04	0,04	0,01	76,86	11,64	0,00	0,00	0,00
Paving (acres/day)	0,0	N/A	N/A	N/A	N/A	N/A	N/A	0,00	0,00	0,00	N/A	N/A	N/A	N/A	N/A	N/A	N/A	N/A	N/A
Total [13]		**16,82**	**16,38**	**2,10**	**2,05**	**4 374,11**	**4 257,80**	**0,00**	**0,00**	**0,00**	**4,21**	**4,09**	**0,53**	**0,51**	**1 093,53**	**1 064,45**	**N/A**	**N/A**	**N/A**

Landfill Lining & Partial Closure

Schedule (days/yr)	Year
260	2029

		Fugitive Particulate Emissions						ROG Emissions			Controlled Emissions: Fugitive Particulate Emissions						Controlled Emissions: ROG Emissions		
		(lb/day)		(lb/hr)		(lb/yr)		(lb/day)	(lb/hr)	(lb/yr)	(lb/day)		(lb/hr)		(lb/yr)		(lb/day)	(lb/hr)	(lb/yr)
Activity	Max. Activity per day	PM_{10}	$PM_{2.5}$	PM_{10}	$PM_{2.5}$	PM_{10}	$PM_{2.5}$	ROG	ROG	ROG	PM_{10}	$PM_{2.5}$	PM_{10}	$PM_{2.5}$	PM_{10}	$PM_{2.5}$	ROG	ROG	ROG
Grading (acres/day)	5,5	5,83	0,63	0,73	0,08	1 516,52	163,75	0,00	0,00	0,00	1,46	0,16	0,18	0,02	379,13	40,94	0,00	0,00	0,00
Bulldozing (hr/day)	16	7,60	10,49	0,95	1,31	1 975,83	2 728,11	0,00	0,00	0,00	1,90	2,62	0,24	0,33	493,96	682,03	0,00	0,00	0,00
Truck Loading (cy/day)	10 135	1,14	0,17	0,14	0,02	297,15	45,00	0,00	0,00	0,00	0,29	0,04	0,04	0,01	74,29	11,25	0,00	0,00	0,00
Paving (acres/day)	0,0	N/A	N/A	N/A	N/A	N/A	N/A	0,00	0,00	0,00	N/A	N/A	N/A	N/A	N/A	N/A	N/A	N/A	N/A
Total [13]		**14,57**	**11,30**	**1,82**	**1,41**	**3 789,50**	**2 936,85**	**0,00**	**0,00**	**0,00**	**3,64**	**2,82**	**0,46**	**0,35**	**947,37**	**734,21**	**N/A**	**N/A**	**N/A**

Recovered Materials Storage

Schedule (days/yr)	Year
260	2029

		Fugitive Particulate Emissions						ROG Emissions			Controlled Emissions: Fugitive Particulate Emissions						Controlled Emissions: ROG Emissions		
		(lb/day)		(lb/hr)		(lb/yr)		(lb/day)	(lb/hr)	(lb/yr)	(lb/day)		(lb/hr)		(lb/yr)		(lb/day)	(lb/hr)	(lb/yr)
Activity	Max. Activity per day	PM_{10}	$PM_{2.5}$	PM_{10}	$PM_{2.5}$	PM_{10}	$PM_{2.5}$	ROG	ROG	ROG	PM_{10}	$PM_{2.5}$	PM_{10}	$PM_{2.5}$	PM_{10}	$PM_{2.5}$	ROG	ROG	ROG
Grading (acres/day)	1,5	1,59	0,17	0,20	0,02	413,60	44,66	0,00	0,00	0,00	0,40	0,04	0,05	0,01	103,40	11,16	0,00	0,00	0,00
Bulldozing (hr/day)	7	3,32	4,59	0,42	0,57	864,43	1 193,55	0,00	0,00	0,00	0,83	1,15	0,10	0,14	216,11	298,39	0,00	0,00	0,00
Truck Loading (cy/day)	0	0,00	0,00	0,00	0,00	0,00	0,00	0,00	0,00	0,00	0,00	0,00	0,00	0,00	0,00	0,00	0,00	0,00	0,00
Paving (acres/day)	0,1	N/A	N/A	N/A	N/A	N/A	N/A	0,26	0,03	68,12	N/A	N/A	N/A	N/A	N/A	N/A	N/A	N/A	N/A
Total [13]		**4,92**	**4,76**	**0,61**	**0,60**	**1 278,02**	**1 238,20**	**0,26**	**0,03**	**68,12**	**1,23**	**1,19**	**0,15**	**0,15**	**319,51**	**309,55**	**N/A**	**N/A**	**N/A**

HHW Storage

Schedule (days/yr)	Year
260	2029

		Fugitive Particulate Emissions						ROG Emissions			Controlled Emissions: Fugitive Particulate Emissions						Controlled Emissions: ROG Emissions		
		(lb/day)		(lb/hr)		(lb/yr)		(lb/day)	(lb/hr)	(lb/yr)	(lb/day)		(lb/hr)		(lb/yr)		(lb/day)	(lb/hr)	(lb/yr)
Activity	Max. Activity per day	PM_{10}	$PM_{2.5}$	PM_{10}	$PM_{2.5}$	PM_{10}	$PM_{2.5}$	ROG	ROG	ROG	PM_{10}	$PM_{2.5}$	PM_{10}	$PM_{2.5}$	PM_{10}	$PM_{2.5}$	ROG	ROG	ROG
Grading (acres/day)	1,5	1,59	0,17	0,20	0,02	413,60	44,66	0,00	0,00	0,00	0,40	0,04	0,05	0,01	103,40	11,16	0,00	0,00	0,00
Bulldozing (hr/day)	0	0,00	0,00	0,00	0,00	0,00	0,00	0,00	0,00	0,00	0,00	0,00	0,00	0,00	0,00	0,00	0,00	0,00	0,00
Truck Loading (cy/day)	0	0,00	0,00	0,00	0,00	0,00	0,00	0,00	0,00	0,00	0,00	0,00	0,00	0,00	0,00	0,00	0,00	0,00	0,00
Paving (acres/day)	0,0	N/A	N/A	N/A	N/A	N/A	N/A	0,00	0,00	0,00	N/A	N/A	N/A	N/A	N/A	N/A	N/A	N/A	N/A
Total [13]		**1,59**	**0,17**	**0,20**	**0,02**	**413,60**	**44,66**	**0,00**	**0,00**	**0,00**	**0,40**	**0,04**	**0,05**	**0,01**	**103,40**	**11,16**	**N/A**	**N/A**	**N/A**

WPWMA EIR
Construction Emissions - Proposed Project Fugitive Emissions From Activities
Plan Concept 1

	Schedule (days/yr)	Year
Primary Maintenance Facility	260	2033

		Fugitive Particulate Emissions						ROG Emissions			Controlled Emissions								
		(lb/day)		(lb/hr)		(lb/yr)		(lb/day)	(lb/hr)	(lb/yr)	(lb/day)		(lb/hr)		(lb/yr)		(lb/day)	(lb/hr)	(lb/yr)
Activity	**Max. Activity per day**	**PM_{10}**	**$PM_{2.5}$**	**PM_{10}**	**$PM_{2.5}$**	**PM_{10}**	**$PM_{2.5}$**	**ROG**	**ROG**	**ROG**	**PM_{10}**	**$PM_{2.5}$**	**PM_{10}**	**$PM_{2.5}$**	**PM_{10}**	**$PM_{2.5}$**	**ROG**	**ROG**	**ROG**
Grading (acres/day)	1,5	1,59	0,17	0,20	0,02	413,60	44,66	0,00	0,00	0,00	0,40	0,04	0,05	0,01	103,40	11,16	0,00	0,00	0,00
Bulldozing (hr/day)	7	3,32	4,59	0,42	0,57	864,43	1 193,55	0,00	0,00	0,00	0,83	1,15	0,10	0,14	216,11	298,39	0,00	0,00	0,00
Truck Loading (cy/day)	0	0,00	0,00	0,00	0,00	0,00	0,00	0,00	0,00	0,00	0,00	0,00	0,00	0,00	0,00	0,00	0,00	0,00	0,00
Paving (acres/day)	0,2	N/A	N/A	N/A	N/A	N/A	N/A	0,52	0,07	136,24	N/A	N/A	N/A	N/A	N/A	N/A	N/A	N/A	N/A
Total [13]		**4,92**	**4,76**	**0,61**	**0,60**	**1 278,02**	**1 238,20**	**0,52**	**0,07**	**136,24**	**1,23**	**1,19**	**0,15**	**0,15**	**319,51**	**309,55**	**N/A**	**N/A**	**N/A**

	Schedule (days/yr)	Year
Stockpile Relocation	260	2033

		Fugitive Particulate Emissions						ROG Emissions			Controlled Emissions								
		(lb/day)		(lb/hr)		(lb/yr)		(lb/day)	(lb/hr)	(lb/yr)	(lb/day)		(lb/hr)		(lb/yr)		(lb/day)	(lb/hr)	(lb/yr)
Activity	**Max. Activity per day**	**PM_{10}**	**$PM_{2.5}$**	**PM_{10}**	**$PM_{2.5}$**	**PM_{10}**	**$PM_{2.5}$**	**ROG**	**ROG**	**ROG**	**PM_{10}**	**$PM_{2.5}$**	**PM_{10}**	**$PM_{2.5}$**	**PM_{10}**	**$PM_{2.5}$**	**ROG**	**ROG**	**ROG**
Grading (acres/day)	0,0	0,00	0,00	0,00	0,00	0,00	0,00	0,00	0,00	0,00	0,00	0,00	0,00	0,00	0,00	0,00	0,00	0,00	0,00
Bulldozing (hr/day)	0	0,00	0,00	0,00	0,00	0,00	0,00	0,00	0,00	0,00	0,00	0,00	0,00	0,00	0,00	0,00	0,00	0,00	0,00
Truck Loading (cy/day)	5 385	0,61	0,09	0,08	0,01	157,88	23,91	0,00	0,00	0,00	0,15	0,02	0,02	0,00	39,47	5,98	0,00	0,00	0,00
Paving (acres/day)	0,0	N/A	N/A	N/A	N/A	N/A	N/A	0,00	0,00	0,00	N/A	N/A	N/A	N/A	N/A	N/A	N/A	N/A	N/A
Total [13]		**0,61**	**0,09**	**0,08**	**0,01**	**157,88**	**23,91**	**0,00**	**0,00**	**0,00**	**0,15**	**0,02**	**0,02**	**0,00**	**39,47**	**5,98**	**N/A**	**N/A**	**N/A**

[1] Unless otherwise noted data provided in the Assumptions tab and are based on project specific inputs.

[2] Typical module size based on Module 9 as per data provided by CCL July 2011. Data provided for entrance construction is 12,000 cy/day.

[3] Total area to be paved includes approximately 8 acres for road and 3 acres for new parking area as per assumptions sheet.

[4] Volume of cut / fill for the Berm Construction taken from design drawings (ccl_berm-calcs-r01.pdf).

[5] The Berm schedule was taken as described on the Construction PP - Exhaust tab.

[6] Source: SCAQMD Particulate Matter (PM) 2.5 Significance Thresholds and Calculation Methodology, October 2006. For construction fugitive dust sources, it is assumed that 20.8% of the PM_{10} would be $PM_{2.5}$. For paved and unpaved road fugitive dust sources, it is assumed that 16.9% and 21.2% of the PM_{10} would be $PM_{2.5}$, respectively.

[7] Source: SCAQMD CEQA Air Quality Handbook, November 1993. Table 9-9, assumed soil density of 1.8 ton/yd^3.

[8] Source: Table 3-2 of the WRAP Fugitive Dust Handbook (Countess Environmental, 2006), which is consistent with the approach used by URBEMIS2007, the previously ARB-approved emission calculation estimator.

[9] Source: Section 4.8 of Appendix A of the CalEEMod User's Guide, 2011.

[10] Fugitive Emissions are based on maximum amount of earth disturbed. Emission factors are independent of operating year. Maximum daily activity data provided by CCL, July 2011.

[11] Fugitive dust emissions assumed not to occur on days in which precipitation would be >0.1 inches. Average Los Angeles - South Coast precipitation conditions (33 days/year) were taken from CalEEMod Appendix D, Table 1.1.

[12] Using the assumptions in Appendix A of the Software User's Guide: URBEMIS2007 for Windows (JSA, 2007), up to 25% of the total graded area could be disturbed on the worst-case day.

[13] The Total Daily and Total Hourly emissions are the maximum emissions given the assumed schedule (i.e., that Grading and Excavation activities do not occur simultaneously and that Berm activities may overlap with Grading and/or Excavation activities). The Total Annual emissions represent the sum of all construction activities occurring within the year.

[14] It is assumed that the construction phases excavation and grading could occur simultaneously for the module construction as consistent with the exhaust construction tab.

[15] Totals for Module Construction represent total emissions from construction of one Module since one module is constructed per year.

WPWMA EIR
Construction Emissions - Proposed Project Fugitive Emissions From Activities
Plan Concept 2

= manual input

Grading Assumptions

Equipment Type	Acres/8hr-day
Rubber Tired Dozers	0,5
Concrete/Industrial Saws	0
Crawler Tractors	0,5
Graders	0,5
Excavators	0
Scrapers	1

Variable	Value	Unit	
Mean Vehicle Speed, S	7,1	mph	AP-42 default is 7.1 mph
PM2.5 Scaling Factor, $F_{PM2.5}$	0,031		AP-42 default is 0.031
PM10 Scaling Factor, F_{PM10}	0,6		AP-42 default is 0.6
Blade Width	12	ft	CalEEMod default is 12 ft based on CAT 140 Motor Grader
Emission Factor PM15, EF_{PM15}	2,571	lb/VMT	$EF_{PM15} = 0.051 \times (S)^{2.0}$
Emission Factor TSP, EF_{TSP}	5,373	lb/VMT	$EF_{TSP} = 0.04 \times (S)^{2.5}$
Emission Factor PM10, EF_{PM10}	1,543	lb/VMT	$EF_{PM10} = EF_{PM15} \times F_{PM10}$
Emission Factor PM2.5, $EF_{PM2.5}$	0,167	lb/VMT	$EF_{PM2.5} = EF_{TSP} \times F_{PM2.5}$
			E = EF x VMT

	Number of Equipment in Grading Phase											
Equipment Type	**Main Entrance**	**New SW Ponds**	**Unlined Area Excavation (1 of 3)**	**Stockpile Relocation**	**Public Area**	**Public Area - SW Pond**	**Unlined Area Excavation (3 of 3)**	**Landfill Construction**	**Landfill Lining & Partial Closure**	**Admin Building**	**Recovered Materials Storage**	**Shared Site Utilities**
Rubber Tired Dozers	1	0	0	0	1	N/A	0	1	2	1	1	1
Concrete/Industrial Saws	0	0	0	0	0	N/A	0	0	0	1	0	1
Tractors/Loaders/Backhoes	1	0	0	0	2	N/A	0	2	2	2	1	2
Graders	1	0	0	0	1	N/A	0	1	1	0	1	0
Excavators	0	0	0	0	2	N/A	0	2	1	0	0	0
Scrapers	0	0	0	0	2	N/A	0	2	3	0	0	0

Note: Landfill Lining & Partial Closure column shows number of equipment for Lining & Partial Closure phase, not Grading phase.

		Maximum Daily Emissions (lb/day) - across all construction phases					
		Uncontrolled Emissions			Controlled Emissions		
Element	**Year**	**PM_{10}**	**$PM_{2.5}$**	**ROG**	**PM_{10}**	**$PM_{2.5}$**	**ROG**
Main Entrance	2024	3,32	4,59	0,52	2,49	3,44	0,52
New SW Ponds	2024	1,09	0,16	0,00	0,81	0,12	0,00
Unlined Area Excavation (1 of 3)	2024	11,40	15,74	0,00	8,55	11,80	0,00
Stockpile Relocation	2024	0,30	0,05	0,00	0,23	0,03	0,00
Public Area	2026	11,40	15,74	1,18	8,55	11,80	1,18
Public Area - SW Pond	2026	3,32	4,59	0,00	2,49	3,44	0,00
Unlined Area Excavation (3 of 3)	2026	11,40	15,74	0,00	8,55	11,80	0,00
Landfill Construction	2031	11,40	15,74	0,00	8,55	11,80	0,00
Landfill Lining & Partial Closure	2032	7,60	10,49	0,00	5,70	7,87	0,00
Admin Building	2032	1,59	0,17	0,26	1,19	0,13	0,26
Recovered Materials Storage	2032	3,32	4,59	0,26	2,49	3,44	0,26
Shared Site Utilities	2032	1,59	0,17	0,00	1,19	0,13	0,00

Note: Assumes element and associated stormwater pond are built concurrently, as opposed to sequentially.

	Maximum Daily Emissions (lb/day) - across all construction phases					
	Uncontrolled Emissions			Controlled Emissions		
Year	**PM_{10}**	**$PM_{2.5}$**	**ROG**	**PM_{10}**	**$PM_{2.5}$**	**ROG**
2024	16,11	20,54	0,52	12,09	15,41	0,52
2026	26,12	36,07	1,18	19,59	27,05	1,18
2031	11,40	15,74	0,00	8,55	11,80	0,00
2032	14,11	15,43	0,52	10,58	11,57	0,52

WPWMA EIR
Construction Emissions - Proposed Project Fugitive Emissions From Activities
Plan Concept 2

Bulldozing Assumptions

Variable	Value	Unit	
C (TSP)	5,7		AP-42 constant for overburden
C (PM15)	1		AP-42 constant for overburden
Material Moisture Content, M	7,90%		AP-42 constant for overburden
Material Silt Content, s	6,90%		AP-42 constant for overburden
PM10 Scaling Factor, F_{PM10}	0,75		AP-42 constant for overburden
PM2.5 Scaling Factor, $F_{PM2.5}$	0,105		AP-42 constant for overburden
Emission Factor PM15, EF_{PM15}	0,633	lb/hr	$EF_{PM15} = (C_{PM15} \times s^{1.5}) / M^{1.4}$
Emission Factor TSP, EF_{TSP}	6,246	lb/hr	$EF_{TSP} = (C_{TSP} \times s^{1.2}) / M^{1.3}$
Emission Factor PM10, EF_{PM10}	0,475	lb/hr	$EF_{PM10} = EF_{PM15} \times F_{PM10}$
Emission Factor PM2.5, $EF_{PM2.5}$	0,656	lb/hr	$EF_{PM2.5} = EF_{TSP} \times F_{PM2.5}$
			E = EF x Hr

	Number of Equipment-Hours Per Day in Site Preparation Phase											
Equipment Type	Main Entrance	New SW Ponds	Unlined Area Excavation (1 of 3)	Stockpile Relocation	Public Area	Public Area - SW Pond	Unlined Area Excavation (3 of 3)	Landfill Construction	Landfill Lining & Partial Closure	Admin Building	Recovered Materials Storage	Shared Site Utilities
Graders	8	0	0	0	0	8	0	0	8	8	8	8
Tractors/Loaders/Backhoes	8	0	32	0	32	8	32	32	12	8	8	8
Rubber Tired Dozers	7	0	24	0	24	7	24	24	16	0	7	0
Scrapers	0	0	0	0	0	0	0	0	24	0	0	0

Note: Landfill Lining & Partial Closure column shows equipment-hours for Lining & Partial Closure phase, not Site Preparation phase.

Truck Loading Assumptions

Variable	Value	Unit	
Particle size multiplier, $k_{PM2.5}$	0,053		AP-42 default is 0.053
Particle size multiplier, k_{PM10}	0,35		AP-42 default is 0.35
Wind speed, U	4,917	mph	Based on CalEEMod default of 2.2 m/s for Placer County - Sacramento
Material moisture content, M	12	%	AP-42 default is 12%
Density	1,264	tons/cy	Based on CalEEMod assumption of 1.264 tons per cubic yard
Emission Factor PM2.5, $EF_{PM2.5}$	1,35E-05	lb/ton	$EF_{PM2.5} = k \times (0.0032) \times [(U/5)^{1.3} / (M/2)^{1.4}]$
Emission Factor PM10, EF_{PM10}	8,92E-05	lb/ton	$EF_{PM10} = k \times (0.0032) \times [(U/5)^{1.3} / (M/2)^{1.4}]$
			E = EF x Throughput

Throughput	Main Entrance	New SW Ponds	Unlined Area Excavation (1 of 3)	Stockpile Relocation	Public Area	Public Area - SW Pond	Unlined Area Excavation (3 of 3)	Landfill Construction	Landfill Lining & Partial Closure	Admin Building	Recovered Materials Storage	Shared Site Utilities
Excavation Volume (cy)	0	96 342	1 215 334	700 000	0	10 162	1 215 334	1 835 000	131 750	0	0	7 852
Excavation Days (days)	0	10	116	260	0	1	116	175	13	0	0	1

Asphalt Paving Assumptions

Variable	Value	Unit	
Emission Factor ROG, EF_{ROG}	2,62	lb/ac	CalEEMod uses SMAQMD default of 2.62 lb/ac
			E = EF x Area

Asphalt	Main Entrance	New SW Ponds	Unlined Area Excavation (1 of 3)	Stockpile Relocation	Public Area	Public Area - SW Pond	Unlined Area Excavation (3 of 3)	Landfill Construction	Landfill Lining & Partial Closure	Admin Building	Recovered Materials Storage	Shared Site Utilities
Paved Asphalt Area (ac)	2	0	0	0	9	0	0	0	0	1	1	0
Paving Days (days)	10	0	0	0	20	0	0	0	0	10	10	0

General Assumptions

Construction Schedule	Operational Schedule	Unit
8	8	hr/day
5	5	days/week
4	(52 weeks / yr)	weeks/month

Control Measures

Measure	Control Efficiency	Applicable Source	Reference
Apply water every 3 hours to distrubed areas within construction site.	75,00%	Watering of fugitve dust activity	Sacramento Metropolitan Air Quality Management District (SMAQMD). 2015. CEQA Guide. June.
Total Control Efficiency	75,00%	Excavation / Grading	

WPWMA EIR
Construction Emissions - Proposed Project Fugitive Emissions From Activities
Plan Concept 2

Main Entrance

Duration (days)	Year
260	2024

		Fugitive Particulate Emissions						ROG Emissions			Controlled Emissions: Fugitive Particulate Emissions						Controlled Emissions: ROG Emissions		
		(lb/day)		(lb/hr)		(lb/yr)		(lb/day)	(lb/hr)	(lb/yr)	(lb/day)		(lb/hr)		(lb/yr)		(lb/day)	(lb/hr)	(lb/yr)
Activity	Max. Activity per day	PM_{10}	$PM_{2.5}$	PM_{10}	$PM_{2.5}$	PM_{10}	$PM_{2.5}$	ROG	ROG	ROG	PM_{10}	$PM_{2.5}$	PM_{10}	$PM_{2.5}$	PM_{10}	$PM_{2.5}$	ROG	ROG	ROG
Grading (acres/day)	1,5	1,59	0,17	0,20	0,02	413,60	44,66	0,00	0,00	0,00	1,19	0,13	0,15	0,02	310,20	33,49	0,00	0,00	0,00
Bulldozing (hr/day)	7	3,32	4,59	0,42	0,57	864,43	1 193,55	0,00	0,00	0,00	2,49	3,44	0,31	0,43	648,32	895,16	0,00	0,00	0,00
Truck Loading (cy/day)	0	0,00	0,00	0,00	0,00	0,00	0,00	0,00	0,00	0,00	0,00	0,00	0,00	0,00	0,00	0,00	0,00	0,00	0,00
Paving (acres/day)	0,2	N/A	N/A	N/A	N/A	N/A	N/A	0,52	0,07	136,24	N/A	N/A	N/A	N/A	N/A	N/A	N/A	N/A	N/A
Total [13]		**4,92**	**4,76**	**0,61**	**0,60**	**1 278,02**	**1 238,20**	**0,52**	**0,07**	**136,24**	**3,69**	**3,57**	**0,46**	**0,45**	**958,52**	**928,65**	**N/A**	**N/A**	**N/A**

New SW Ponds

Duration (days)	Year
260	2024

		Fugitive Particulate Emissions						ROG Emissions			Controlled Emissions: Fugitive Particulate Emissions						Controlled Emissions: ROG Emissions		
		(lb/day)		(lb/hr)		(lb/yr)		(lb/day)	(lb/hr)	(lb/yr)	(lb/day)		(lb/hr)		(lb/yr)		(lb/day)	(lb/hr)	(lb/yr)
Activity	Max. Activity per day	PM_{10}	$PM_{2.5}$	PM_{10}	$PM_{2.5}$	PM_{10}	$PM_{2.5}$	ROG	ROG	ROG	PM_{10}	$PM_{2.5}$	PM_{10}	$PM_{2.5}$	PM_{10}	$PM_{2.5}$	ROG	ROG	ROG
Grading (acres/day)	0,0	0,00	0,00	0,00	0,00	0,00	0,00	0,00	0,00	0,00	0,00	0,00	0,00	0,00	0,00	0,00	0,00	0,00	0,00
Bulldozing (hr/day)	0	0,00	0,00	0,00	0,00	0,00	0,00	0,00	0,00	0,00	0,00	0,00	0,00	0,00	0,00	0,00	0,00	0,00	0,00
Truck Loading (cy/day)	9 634	1,09	0,16	0,14	0,02	282,48	42,78	0,00	0,00	0,00	0,81	0,12	0,10	0,02	211,86	32,08	0,00	0,00	0,00
Paving (acres/day)	0,0	N/A	N/A	N/A	N/A	N/A	N/A	0,00	0,00	0,00	N/A	N/A	N/A	N/A	N/A	N/A	N/A	N/A	N/A
Total [13]		**1,09**	**0,16**	**0,14**	**0,02**	**282,48**	**42,78**	**0,00**	**0,00**	**0,00**	**0,81**	**0,12**	**0,10**	**0,02**	**211,86**	**32,08**	**N/A**	**N/A**	**N/A**

Unlined Area Excavation (1 of 3)

Duration (days)	Year
260	2024

		Fugitive Particulate Emissions						ROG Emissions			Controlled Emissions: Fugitive Particulate Emissions						Controlled Emissions: ROG Emissions		
		(lb/day)		(lb/hr)		(lb/yr)		(lb/day)	(lb/hr)	(lb/yr)	(lb/day)		(lb/hr)		(lb/yr)		(lb/day)	(lb/hr)	(lb/yr)
Activity	Max. Activity per day	PM_{10}	$PM_{2.5}$	PM_{10}	$PM_{2.5}$	PM_{10}	$PM_{2.5}$	ROG	ROG	ROG	PM_{10}	$PM_{2.5}$	PM_{10}	$PM_{2.5}$	PM_{10}	$PM_{2.5}$	ROG	ROG	ROG
Grading (acres/day)	0,0	0,00	0,00	0,00	0,00	0,00	0,00	0,00	0,00	0,00	0,00	0,00	0,00	0,00	0,00	0,00	0,00	0,00	0,00
Bulldozing (hr/day)	24	11,40	15,74	1,42	1,97	2 963,75	4 092,16	0,00	0,00	0,00	8,55	11,80	1,07	1,48	2 222,81	3 069,12	0,00	0,00	0,00
Truck Loading (cy/day)	10 477	1,18	0,18	0,15	0,02	307,19	46,52	0,00	0,00	0,00	0,89	0,13	0,11	0,02	230,39	34,89	0,00	0,00	0,00
Paving (acres/day)	0,0	N/A	N/A	N/A	N/A	N/A	N/A	0,00	0,00	0,00	N/A	N/A	N/A	N/A	N/A	N/A	N/A	N/A	N/A
Total [13]		**12,58**	**15,92**	**1,57**	**1,99**	**3 270,94**	**4 138,68**	**0,00**	**0,00**	**0,00**	**9,44**	**11,94**	**1,18**	**1,49**	**2 453,20**	**3 104,01**	**N/A**	**N/A**	**N/A**

Stockpile Relocation

Duration (days)	Year
260	2024

		Fugitive Particulate Emissions						ROG Emissions			Controlled Emissions: Fugitive Particulate Emissions						Controlled Emissions: ROG Emissions		
		(lb/day)		(lb/hr)		(lb/yr)		(lb/day)	(lb/hr)	(lb/yr)	(lb/day)		(lb/hr)		(lb/yr)		(lb/day)	(lb/hr)	(lb/yr)
Activity	Max. Activity per day	PM_{10}	$PM_{2.5}$	PM_{10}	$PM_{2.5}$	PM_{10}	$PM_{2.5}$	ROG	ROG	ROG	PM_{10}	$PM_{2.5}$	PM_{10}	$PM_{2.5}$	PM_{10}	$PM_{2.5}$	ROG	ROG	ROG
Grading (acres/day)	0,0	0,00	0,00	0,00	0,00	0,00	0,00	0,00	0,00	0,00	0,00	0,00	0,00	0,00	0,00	0,00	0,00	0,00	0,00
Bulldozing (hr/day)	0	0,00	0,00	0,00	0,00	0,00	0,00	0,00	0,00	0,00	0,00	0,00	0,00	0,00	0,00	0,00	0,00	0,00	0,00
Truck Loading (cy/day)	2 692	0,30	0,05	0,04	0,01	78,94	11,95	0,00	0,00	0,00	0,23	0,03	0,03	0,00	59,20	8,97	0,00	0,00	0,00
Paving (acres/day)	0,0	N/A	N/A	N/A	N/A	N/A	N/A	0,00	0,00	0,00	N/A	N/A	N/A	N/A	N/A	N/A	N/A	N/A	N/A
Total [13]		**0,30**	**0,05**	**0,04**	**0,01**	**78,94**	**11,95**	**0,00**	**0,00**	**0,00**	**0,23**	**0,03**	**0,03**	**0,00**	**59,20**	**8,97**	**N/A**	**N/A**	**N/A**

Public Area

Duration (days)	Year
260	2026

		Fugitive Particulate Emissions						ROG Emissions			Controlled Emissions: Fugitive Particulate Emissions						Controlled Emissions: ROG Emissions		
		(lb/day)		(lb/hr)		(lb/yr)		(lb/day)	(lb/hr)	(lb/yr)	(lb/day)		(lb/hr)		(lb/yr)		(lb/day)	(lb/hr)	(lb/yr)
Activity	Max. Activity per day	PM_{10}	$PM_{2.5}$	PM_{10}	$PM_{2.5}$	PM_{10}	$PM_{2.5}$	ROG	ROG	ROG	PM_{10}	$PM_{2.5}$	PM_{10}	$PM_{2.5}$	PM_{10}	$PM_{2.5}$	ROG	ROG	ROG
Grading (acres/day)	4,0	4,24	0,46	0,53	0,06	1 102,92	119,09	0,00	0,00	0,00	3,18	0,34	0,40	0,04	827,19	89,32	0,00	0,00	0,00
Bulldozing (hr/day)	24	11,40	15,74	1,42	1,97	2 963,75	4 092,16	0,00	0,00	0,00	8,55	11,80	1,07	1,48	2 222,81	3 069,12	0,00	0,00	0,00
Truck Loading (cy/day)	0	0,00	0,00	0,00	0,00	0,00	0,00	0,00	0,00	0,00	0,00	0,00	0,00	0,00	0,00	0,00	0,00	0,00	0,00
Paving (acres/day)	0,5	N/A	N/A	N/A	N/A	N/A	N/A	1,18	0,15	306,54	N/A	N/A	N/A	N/A	N/A	N/A	N/A	N/A	N/A
Total [13]		**15,64**	**16,20**	**1,96**	**2,02**	**4 066,67**	**4 211,25**	**1,18**	**0,15**	**306,54**	**11,73**	**12,15**	**1,47**	**1,52**	**3 050,00**	**3 158,44**	**N/A**	**N/A**	**N/A**

WPWMA EIR
Construction Emissions - Proposed Project Fugitive Emissions From Activities
Plan Concept 2

	Duration (days)	Year
Public Area - SW Pond	260	2026

		Fugitive Particulate Emissions						ROG Emissions			Controlled Emissions: Fugitive Particulate Emissions						Controlled Emissions: ROG Emissions		
		(lb/day)		(lb/hr)		(lb/yr)		(lb/day)	(lb/hr)	(lb/yr)	(lb/day)		(lb/hr)		(lb/yr)		(lb/day)	(lb/hr)	(lb/yr)
Activity	**Max. Activity per day**	**PM_{10}**	**$PM_{2.5}$**	**PM_{10}**	**$PM_{2.5}$**	**PM_{10}**	**$PM_{2.5}$**	**ROG**	**ROG**	**ROG**	**PM_{10}**	**$PM_{2.5}$**	**PM_{10}**	**$PM_{2.5}$**	**PM_{10}**	**$PM_{2.5}$**	**ROG**	**ROG**	**ROG**
Grading (acres/day)	0,0	0,00	0,00	0,00	0,00	0,00	0,00	0,00	0,00	0,00	0,00	0,00	0,00	0,00	0,00	0,00	0,00	0,00	0,00
Bulldozing (hr/day)	7	3,32	4,59	0,42	0,57	864,43	1 193,55	0,00	0,00	0,00	2,49	3,44	0,31	0,43	648,32	895,16	0,00	0,00	0,00
Truck Loading (cy/day)	10 162	1,15	0,17	0,14	0,02	297,95	45,12	0,00	0,00	0,00	0,86	0,13	0,11	0,02	223,46	33,84	0,00	0,00	0,00
Paving (acres/day)	0,0	N/A	N/A	N/A	N/A	N/A	N/A	0,00	0,00	0,00	N/A	N/A	N/A	N/A	N/A	N/A	N/A	N/A	N/A
Total [13]		**4,47**	**4,76**	**0,56**	**0,60**	**1 162,38**	**1 238,66**	**0,00**	**0,00**	**0,00**	**3,35**	**3,57**	**0,42**	**0,45**	**871,78**	**929,00**	**N/A**	**N/A**	**N/A**

	Duration (days)	Year
Unlined Area Excavation (3 of 3)	260	2026

		Fugitive Particulate Emissions						ROG Emissions			Controlled Emissions: Fugitive Particulate Emissions						Controlled Emissions: ROG Emissions		
		(lb/day)		(lb/hr)		(lb/yr)		(lb/day)	(lb/hr)	(lb/yr)	(lb/day)		(lb/hr)		(lb/yr)		(lb/day)	(lb/hr)	(lb/yr)
Activity	**Max. Activity per day**	**PM_{10}**	**$PM_{2.5}$**	**PM_{10}**	**$PM_{2.5}$**	**PM_{10}**	**$PM_{2.5}$**	**ROG**	**ROG**	**ROG**	**PM_{10}**	**$PM_{2.5}$**	**PM_{10}**	**$PM_{2.5}$**	**PM_{10}**	**$PM_{2.5}$**	**ROG**	**ROG**	**ROG**
Grading (acres/day)	0,0	0,00	0,00	0,00	0,00	0,00	0,00	0,00	0,00	0,00	0,00	0,00	0,00	0,00	0,00	0,00	0,00	0,00	0,00
Bulldozing (hr/day)	24	11,40	15,74	1,42	1,97	2 963,75	4 092,16	0,00	0,00	0,00	8,55	11,80	1,07	1,48	2 222,81	3 069,12	0,00	0,00	0,00
Truck Loading (cy/day)	10 477	1,18	0,18	0,15	0,02	307,19	46,52	0,00	0,00	0,00	0,89	0,13	0,11	0,02	230,39	34,89	0,00	0,00	0,00
Paving (acres/day)	0,0	N/A	N/A	N/A	N/A	N/A	N/A	0,00	0,00	0,00	N/A	N/A	N/A	N/A	N/A	N/A	N/A	N/A	N/A
Total [13]		**12,58**	**15,92**	**1,57**	**1,99**	**3 270,94**	**4 138,68**	**0,00**	**0,00**	**0,00**	**9,44**	**11,94**	**1,18**	**1,49**	**2 453,20**	**3 104,01**	**N/A**	**N/A**	**N/A**

	Duration (days)	Year
Landfill Construction	260	2031

		Fugitive Particulate Emissions						ROG Emissions			Controlled Emissions: Fugitive Particulate Emissions						Controlled Emissions: ROG Emissions		
		(lb/day)		(lb/hr)		(lb/yr)		(lb/day)	(lb/hr)	(lb/yr)	(lb/day)		(lb/hr)		(lb/yr)		(lb/day)	(lb/hr)	(lb/yr)
Activity	**Max. Activity per day**	**PM_{10}**	**$PM_{2.5}$**	**PM_{10}**	**$PM_{2.5}$**	**PM_{10}**	**$PM_{2.5}$**	**ROG**	**ROG**	**ROG**	**PM_{10}**	**$PM_{2.5}$**	**PM_{10}**	**$PM_{2.5}$**	**PM_{10}**	**$PM_{2.5}$**	**ROG**	**ROG**	**ROG**
Grading (acres/day)	4,0	4,24	0,46	0,53	0,06	1 102,92	119,09	0,00	0,00	0,00	3,18	0,34	0,40	0,04	827,19	89,32	0,00	0,00	0,00
Bulldozing (hr/day)	24	11,40	15,74	1,42	1,97	2 963,75	4 092,16	0,00	0,00	0,00	8,55	11,80	1,07	1,48	2 222,81	3 069,12	0,00	0,00	0,00
Truck Loading (cy/day)	10 486	1,18	0,18	0,15	0,02	307,44	46,56	0,00	0,00	0,00	0,89	0,13	0,11	0,02	230,58	34,92	0,00	0,00	0,00
Paving (acres/day)	0,0	N/A	N/A	N/A	N/A	N/A	N/A	0,00	0,00	0,00	N/A	N/A	N/A	N/A	N/A	N/A	N/A	N/A	N/A
Total [13]		**16,82**	**16,38**	**2,10**	**2,05**	**4 374,11**	**4 257,80**	**0,00**	**0,00**	**0,00**	**12,62**	**12,28**	**1,58**	**1,54**	**3 280,59**	**3 193,35**	**N/A**	**N/A**	**N/A**

	Duration (days)	Year
Landfill Lining & Partial Closure	260	2032

		Fugitive Particulate Emissions						ROG Emissions			Controlled Emissions: Fugitive Particulate Emissions						Controlled Emissions: ROG Emissions		
		(lb/day)		(lb/hr)		(lb/yr)		(lb/day)	(lb/hr)	(lb/yr)	(lb/day)		(lb/hr)		(lb/yr)		(lb/day)	(lb/hr)	(lb/yr)
Activity	**Max. Activity per day**	**PM_{10}**	**$PM_{2.5}$**	**PM_{10}**	**$PM_{2.5}$**	**PM_{10}**	**$PM_{2.5}$**	**ROG**	**ROG**	**ROG**	**PM_{10}**	**$PM_{2.5}$**	**PM_{10}**	**$PM_{2.5}$**	**PM_{10}**	**$PM_{2.5}$**	**ROG**	**ROG**	**ROG**
Grading (acres/day)	5,5	5,83	0,63	0,73	0,08	1 516,52	163,75	0,00	0,00	0,00	4,37	0,47	0,55	0,06	1 137,39	122,81	0,00	0,00	0,00
Bulldozing (hr/day)	16	7,60	10,49	0,95	1,31	1 975,83	2 728,11	0,00	0,00	0,00	5,70	7,87	0,71	0,98	1 481,87	2 046,08	0,00	0,00	0,00
Truck Loading (cy/day)	10 135	1,14	0,17	0,14	0,02	297,15	45,00	0,00	0,00	0,00	0,86	0,13	0,11	0,02	222,86	33,75	0,00	0,00	0,00
Paving (acres/day)	0,0	N/A	N/A	N/A	N/A	N/A	N/A	0,00	0,00	0,00	N/A	N/A	N/A	N/A	N/A	N/A	N/A	N/A	N/A
Total [13]		**14,57**	**11,30**	**1,82**	**1,41**	**3 789,50**	**2 936,85**	**0,00**	**0,00**	**0,00**	**10,93**	**8,47**	**1,37**	**1,06**	**2 842,12**	**2 202,64**	**N/A**	**N/A**	**N/A**

	Duration (days)	Year
Admin Building	260	2032

		Fugitive Particulate Emissions						ROG Emissions			Controlled Emissions: Fugitive Particulate Emissions						Controlled Emissions: ROG Emissions		
		(lb/day)		(lb/hr)		(lb/yr)		(lb/day)	(lb/hr)	(lb/yr)	(lb/day)		(lb/hr)		(lb/yr)		(lb/day)	(lb/hr)	(lb/yr)
Activity	**Max. Activity per day**	**PM_{10}**	**$PM_{2.5}$**	**PM_{10}**	**$PM_{2.5}$**	**PM_{10}**	**$PM_{2.5}$**	**ROG**	**ROG**	**ROG**	**PM_{10}**	**$PM_{2.5}$**	**PM_{10}**	**$PM_{2.5}$**	**PM_{10}**	**$PM_{2.5}$**	**ROG**	**ROG**	**ROG**
Grading (acres/day)	1,5	1,59	0,17	0,20	0,02	413,60	44,66	0,00	0,00	0,00	1,19	0,13	0,15	0,02	310,20	33,49	0,00	0,00	0,00
Bulldozing (hr/day)	0	0,00	0,00	0,00	0,00	0,00	0,00	0,00	0,00	0,00	0,00	0,00	0,00	0,00	0,00	0,00	0,00	0,00	0,00
Truck Loading (cy/day)	0	0,00	0,00	0,00	0,00	0,00	0,00	0,00	0,00	0,00	0,00	0,00	0,00	0,00	0,00	0,00	0,00	0,00	0,00
Paving (acres/day)	0,1	N/A	N/A	N/A	N/A	N/A	N/A	0,26	0,03	68,12	N/A	N/A	N/A	N/A	N/A	N/A	N/A	N/A	N/A
Total [13]		**1,59**	**0,17**	**0,20**	**0,02**	**413,60**	**44,66**	**0,26**	**0,03**	**68,12**	**1,19**	**0,13**	**0,15**	**0,02**	**310,20**	**33,49**	**N/A**	**N/A**	**N/A**

WPWMA EIR
Construction Emissions - Proposed Project Fugitive Emissions From Activities
Plan Concept 2

	Duration (days)	Year
Recovered Materials Storage	260	2032

		Fugitive Particulate Emissions						ROG Emissions			Controlled Emissions: Fugitive Particulate Emissions						Controlled Emissions: ROG Emissions		
		(lb/day)		(lb/hr)		(lb/yr)		(lb/day)	(lb/hr)	(lb/yr)	(lb/day)		(lb/hr)		(lb/yr)		(lb/day)	(lb/hr)	(lb/yr)
Activity	**Max. Activity per day**	**PM_{10}**	**$PM_{2.5}$**	**PM_{10}**	**$PM_{2.5}$**	**PM_{10}**	**$PM_{2.5}$**	**ROG**	**ROG**	**ROG**	**PM_{10}**	**$PM_{2.5}$**	**PM_{10}**	**$PM_{2.5}$**	**PM_{10}**	**$PM_{2.5}$**	**ROG**	**ROG**	**ROG**
Grading (acres/day)	1,5	1,59	0,17	0,20	0,02	413,60	44,66	0,00	0,00	0,00	1,19	0,13	0,15	0,02	310,20	33,49	0,00	0,00	0,00
Bulldozing (hr/day)	7	3,32	4,59	0,42	0,57	864,43	1 193,55	0,00	0,00	0,00	2,49	3,44	0,31	0,43	648,32	895,16	0,00	0,00	0,00
Truck Loading (cy/day)	0	0,00	0,00	0,00	0,00	0,00	0,00	0,00	0,00	0,00	0,00	0,00	0,00	0,00	0,00	0,00	0,00	0,00	0,00
Paving (acres/day)	0,1	N/A	N/A	N/A	N/A	N/A	N/A	0,26	0,03	68,12	N/A	N/A	N/A	N/A	N/A	N/A	N/A	N/A	N/A
Total [13]		**4,92**	**4,76**	**0,61**	**0,60**	**1 278,02**	**1 238,20**	**0,26**	**0,03**	**68,12**	**3,69**	**3,57**	**0,46**	**0,45**	**958,52**	**928,65**	**N/A**	**N/A**	**N/A**

	Duration (days)	Year
Shared Site Utilities	260	2032

		Fugitive Particulate Emissions						ROG Emissions			Controlled Emissions: Fugitive Particulate Emissions						Controlled Emissions: ROG Emissions		
		(lb/day)		(lb/hr)		(lb/yr)		(lb/day)	(lb/hr)	(lb/yr)	(lb/day)		(lb/hr)		(lb/yr)		(lb/day)	(lb/hr)	(lb/yr)
Activity	**Max. Activity per day**	**PM_{10}**	**$PM_{2.5}$**	**PM_{10}**	**$PM_{2.5}$**	**PM_{10}**	**$PM_{2.5}$**	**ROG**	**ROG**	**ROG**	**PM_{10}**	**$PM_{2.5}$**	**PM_{10}**	**$PM_{2.5}$**	**PM_{10}**	**$PM_{2.5}$**	**ROG**	**ROG**	**ROG**
Grading (acres/day)	1,5	1,59	0,17	0,20	0,02	413,60	44,66	0,00	0,00	0,00	1,19	0,13	0,15	0,02	310,20	33,49	0,00	0,00	0,00
Bulldozing (hr/day)	0	0,00	0,00	0,00	0,00	0,00	0,00	0,00	0,00	0,00	0,00	0,00	0,00	0,00	0,00	0,00	0,00	0,00	0,00
Truck Loading (cy/day)	7 852	0,89	0,13	0,11	0,02	230,22	34,86	0,00	0,00	0,00	0,66	0,10	0,08	0,01	172,66	26,15	0,00	0,00	0,00
Paving (acres/day)	0,0	N/A	N/A	N/A	N/A	N/A	N/A	0,00	0,00	0,00	N/A	N/A	N/A	N/A	N/A	N/A	N/A	N/A	N/A
Total [13]		**2,48**	**0,31**	**0,31**	**0,04**	**643,81**	**79,52**	**0,00**	**0,00**	**0,00**	**1,86**	**0,23**	**0,23**	**0,03**	**482,86**	**59,64**	**N/A**	**N/A**	**N/A**

[1] Unless otherwise noted data provided in the Assumptions tab and are based on project specific inputs.

[2] Typical module size based on Module 9 as per data provided by CCL July 2011. Data provided for entrance construction is 12,000 cy/day.

[3] Total area to be paved includes approximately 8 acres for road and 3 acres for new parking area as per assumptions sheet.

[4] Volume of cut / fill for the Berm Construction taken from design drawings (ccl_berm-calcs-r01.pdf).

[5] The Berm schedule was taken as described on the Construction PP - Exhaust tab.

[6] Source: SCAQMD Particulate Matter (PM) 2.5 Significance Thresholds and Calculation Methodology, October 2006. For construction fugitive dust sources, it is assumed that 20.8% of the PM_{10} would be $PM_{2.5}$. For paved and unpaved road fugitive dust sources, it is assumed that 16.9% and 21.2% of the PM_{10} would be $PM_{2.5}$, respectively.

[7] Source: SCAQMD CEQA Air Quality Handbook, November 1993. Table 9-9, assumed soil density of 1.8 ton/yd^3.

[8] Source: Table 3-2 of the WRAP Fugitive Dust Handbook (Countess Environmental, 2006), which is consistent with the approach used by URBEMIS2007, the previously ARB-approved emission calculation estimator.

[9] Source: Section 4.8 of Appendix A of the CalEEMod User's Guide, 2011.

[10] Fugitive Emissions are based on maximum amount of earth disturbed. Emission factors are independent of operating year. Maximum daily activity data provided by CCL, July 2011.

[11] Fugitive dust emissions assumed not to occur on days in which precipitation would be >0.1 inches. Average Los Angeles - South Coast precipitation conditions (33 days/year) were taken from CalEEMod Appendix D, Table 1.1.

[12] Using the assumptions in Appendix A of the Software User's Guide: URBEMIS2007 for Windows (JSA, 2007), up to 25% of the total graded area could be disturbed on the worst-case day.

[13] The Total Daily and Total Hourly emissions are the maximum emissions given the assumed schedule (i.e., that Grading and Excavation activities do not occur simultaneously and that Berm activities may overlap with Grading and/or Excavation activities). The Total Annual emissions represent the sum of all construction activities occurring within the year.

[14] It is assumed that the construction phases excavation and grading could occur simultaneously for the module construction as consistent with the exhaust construction tab.

[15] Totals for Module Construction represent total emissions from construction of one Module since one module is constructed per year.

Appendix C.3
LandGEM Modeling Results

Appendix C.3. LandGEM Modeling Results

Summary of LFG Generation Results for LandGEM Model Runs (First data set with conservative overlap of waste throughput)
WPWMA

Year	LFG Baseline (1979-2050) (cf/yr)	No Future Diversion			PC1&PC2	Plan Concept 1				Plan Concept 2		
		LFG (1979-2018) (cf/yr)	LFG (2019-2050) (cf/yr)	Total LFG (1979-2050) (cf/yr)	LFG (1979-2018) (cf/yr)	LFG (2019-2025) (cf/yr)	LFG (2026-2030) (cf/yr)	LFG (2031-2050) (cf/yr)	Total LFG (1979-2050) (cf/yr)	LFG (2019-2028) (cf/yr)	LFG (2029-2050) (cf/yr)	Total LFG (1979-2050) (cf/yr)
k	0.0325	0.0325	0.0325	0.0325	0.0325	0.0325	0.027	0.024	varies	0.0325	0.024	varies
Lo	115	115	100	varies	115	100	80	65	varies	100	65	varies
1979	0	0		0	0				0			0
1980	418855	418855		418855	418855				418855			418855
1981	9824612	9824612		9824612	9824612				9824612			9824612
1982	19207020	19207020		19207020	19207020				19207020			19207020
1983	28745861	28745861		28745861	28745861				28745861			28745861
1984	45005841	45005841		45005841	45005841				45005841			45005841
1985	69529285	69529285		69529285	69529285				69529285			69529285
1986	97552865	97552865		97552865	97552865				97552865			97552865
1987	128915934	128915934		128915934	128915934				128915934			128915934
1988	161392122	161392122		161392122	161392122				161392122			161392122
1989	204787389	204787389		204787389	204787389				204787389			204787389
1990	242591295	242591295		242591295	242591295				242591295			242591295
1991	279071619	279071619		279071619	279071619				279071619			279071619
1992	313551702	313551702		313551702	313551702				313551702			313551702
1993	347270478	347270478		347270478	347270478				347270478			347270478
1994	380716554	380716554		380716554	380716554				380716554			380716554
1995	409760951	409760951		409760951	409760951				409760951			409760951
1996	439699580	439699580		439699580	439699580				439699580			439699580
1997	468603270	468603270		468603270	468603270				468603270			468603270
1998	495495703	495495703		495495703	495495703				495495703			495495703
1999	526849838	526849838		526849838	526849838				526849838			526849838
2000	562566283	562566283		562566283	562566283				562566283			562566283
2001	605719917	605719917		605719917	605719917				605719917			605719917
2002	651220017	651220017		651220017	651220017				651220017			651220017
2003	699656136	699656136		699656136	699656136				699656136			699656136
2004	736516410	736516410		736516410	736516410				736516410			736516410
2005	773992129	773992129		773992129	773992129				773992129			773992129
2006	812937745	812937745		812937745	812937745				812937745			812937745
2007	853887827	853887827		853887827	853887827				853887827			853887827
2008	886281123	886281123		886281123	886281123				886281123			886281123
2009	912037352	912037352		912037352	912037352				912037352			912037352
2010	932655588	932655588		932655588	932655588				932655588			932655588
2011	952087564	952087564		952087564	952087564				952087564			952087564
2012	969239502	969239502		969239502	969239502				969239502			969239502
2013	986124691	986124691		986124691	986124691				986124691			986124691
2014	1005676432	1005676432		1005676432	1005676432				1005676432			1005676432
2015	1025998469	1025998469		1025998469	1025998469				1025998469			1025998469
2016	1049537699	1049537699		1049537699	1049537699				1049537699			1049537699

Appendix C.3. LandGEM Modeling Results

Summary of LFG Generation Results for LandGEM Model Runs (First data set with conservative overlap of waste throughput)
WPWMA

Year	LFG Baseline (1979-2050) (cf/yr)	No Future Diversion			PC1&PC2	Plan Concept 1				Plan Concept 2		
		LFG (1979-2018) (cf/yr)	LFG (2019-2050) (cf/yr)	Total LFG (1979-2050) (cf/yr)	LFG (1979-2018) (cf/yr)	LFG (2019-2025) (cf/yr)	LFG (2026-2030) (cf/yr)	LFG (2031-2050) (cf/yr)	Total LFG (1979-2050) (cf/yr)	LFG (2019-2028) (cf/yr)	LFG (2029-2050) (cf/yr)	Total LFG (1979-2050) (cf/yr)
k	0.0325	0.0325	0.0325	0.0325	0.0325	0.0325	0.027	0.024	varies	0.0325	0.024	varies
Lo	115	115	100	varies	115	100	80	65	varies	100	65	varies
2017	1077033115	1077033115		1077033115	1077033115				1077033115			1077033115
2018	1109638447	1109638447	0	1109638447	1109638447	0			1109638447	0		1109638447
2019	1143906419	1143906419	60653470	1204559889	1143906419	60653470			1204559889	60653470		1204559889
2020	1177078585	1107327094	120580461	1227907555	1107327094	120580461			1227907555	120580461		1227907555
2021	1209189986	1071917486	179828464	1251745950	1071917486	179828464			1251745950	179828464		1251745950
2022	1240274544	1037640191	238443938	1276084129	1037640191	238443938			1276084129	238443938		1276084129
2023	1270365093	1004459000	296472352	1300931352	1004459000	296472352			1300931352	296472352		1300931352
2024	1299493421	972338862	353958225	1326297087	972338862	353958225			1326297087	353958225		1326297087
2025	1327690296	941245847	410945167	1352191014	941245847	410945167	0		1352191014	410945167		1352191014
2026	1354985504	911147111	467475919	1378623030	911147111	467475919	46419052		1425042082	467475919		1378623030
2027	1381407878	882010858	523592392	1405603251	882010858	452527185	89002073		1423540116	523592392		1405603251
2028	1406985329	853806312	579335702	1433142014	853806312	438056474	131327128		1423189913	579335702	0	1433142014
2029	1431744876	826503678	634746207	1461249885	826503678	424048501	173418614		1423970793	627015548	31899834	1485419060
2030	1455712673	800074115	689863545	1489937660	800074115	410488469	215300633	0	1425863217	606965127	60973693	1468012935
2031	1478914039	774489705	744726665	1519216370	774489705	397362053	256997001	34302295	1463151054	587555869	89954692	1452000267
2032	1501373482	749723421	799373863	1549097284	749723421	384655388	250150920	64524327	1449054056	568767272	118856967	1437347661
2033	1523114727	725749103	853842811	1579591914	725749103	372355051	243487210	94650374	1436241738	550579488	147694554	1424023146
2034	1544160741	702541425	908170595	1610712020	702541425	360448049	237001013	124695128	1424685614	532973305	176481403	1411996133
2035	1564533754	680075871	962393741	1642469612	680075871	348921803	230687600	154673178	1414358452	515930124	205231378	1401237374
2036	1584255288	658328711	1016548249	1674876959	658328711	337764139	224542369	184599022	1405234240	499431943	233958270	1391718924
2037	1603346176	637276971	1070669618	1707946589	637276971	326963269	218560839	214487072	1397288151	483461333	262675801	1383414105
2038	1621826585	616898415	1124792879	1741691295	616898415	316507785	212738649	244351661	1390496511	468001424	291397629	1376297468
2039	1639716035	597171515	1178952625	1776124140	597171515	306386641	207071556	274207054	1384836766	453035885	320137359	1370344759
2040	1657033424	578075433	1233183032	1811258465	578075433	296589147	201555427	304067447	1380287453	438548907	348908548	1365532888
2041	1673797045	559589997	1287517892	1847107889	559589997	287104953	196186240	333946982	1376828172	424525187	377724708	1361839893
2042	1690024607	541695680	1341990637	1883686316	541695680	277924040	190960083	363859751	1374439553	410949912	406599320	1359244911
2043	1705733252	524373579	1396634365	1921007944	524373579	269036710	185873143	393819802	1373103233	397808741	435545832	1357728151
2044	1720939572	507605396	1451481867	1959087263	507605396	260433575	180921713	423841146	1372801830	385087792	464577672	1357270860
2045	1735659631	491373419	1506565648	1997939068	491373419	252105547	176102183	453937765	1373518915	372773627	493708254	1357855300
2046	1749908979	475660501	1561917958	2037578459	475660501	244043829	171411040	484123618	1375238988	360853240	522950978	1359464719
2047	1763702668	460450044	1617570809	2078020852	460450044	236239906	166844863	514412648	1377947460	349314037	552319245	1362083326
2048	1777055268	445725979	1673556000	2119281979	445725979	228685532	162400323	544818789	1381630624	338143830	581826458	1365696268
2049	1789980885	431472754	1729905145	2161377900	431472754	221372729	158074180	575355972	1386275635	327330819	611486030	1370289604
2050	1802493173	417675313	1786649690	2204325003	417675313	214293772	153863280	606038130	1391870495	316863581	641311390	1375850284

Note: This table provides a summary of the LandGem model results, which were initailly set up to provide a conservative estimate of landfill gas generation.
This analysis is noted to include an overlap in waste placement throughput, when waste diversion rates are adjusted.

Appendix C.3. LandGEM Modeling Results

Summary of LFG Generation Results for LandGEM Model Runs (First data set with conservative overlap of waste throughput)
WPWMA

Year	LFG Baseline (1979-2050) (cf/yr)	No Future Diversion			PC1&PC2	Plan Concept 1				Plan Concept 2		
		LFG (1979-2018) (cf/yr)	LFG (2019-2050) (cf/yr)	Total LFG (1979-2050) (cf/yr)	LFG (1979-2018) (cf/yr)	LFG (2019-2025) (cf/yr)	LFG (2026-2030) (cf/yr)	LFG (2031-2050) (cf/yr)	Total LFG (1979-2050) (cf/yr)	LFG (2019-2028) (cf/yr)	LFG (2029-2050) (cf/yr)	Total LFG (1979-2050) (cf/yr)
k	0.0325	0.0325	0.0325	0.0325	0.0325	0.0325	0.027	0.024	varies	0.0325	0.024	varies
Lo	115	115	100	varies	115	100	80	65	varies	100	65	varies

Therfore, this analysis data will be used for a conservative estimate of criteria pollutant and toxic emissions.

Appendix C.3. LandGEM Modeling Results

Summary of LFG Generation Results for LandGEM Model Runs (Second data set with representative estimate of waste throughput)
WPWMA

Year	LFG Baseline (1979-2050) (cf/yr)	No Future Diversion			PC1&PC2	Plan Concept 1				Plan Concept 2		
		LFG (1979-2018) (cf/yr)	LFG (2019-2050) (cf/yr)	Total LFG (1979-2050) (cf/yr)	LFG (1979-2018) (cf/yr)	LFG (2019-2025) (cf/yr)	LFG (2026-2030) (cf/yr)	LFG (2031-2050) (cf/yr)	Total LFG (1979-2050) (cf/yr)	LFG (2019-2028) (cf/yr)	LFG (2029-2050) (cf/yr)	Total LFG (1979-2050) (cf/yr)
k	0.0325	0.0325	0.0325	0.0325	0.0325	0.0325	0.027	0.024	varies	0.0325	0.024	varies
Lo	115	115	100	varies	115	100	80	65	varies	100	65	varies
1979	0	0		0	0				0			0
1980	418855	418855		418855	418855				418855			418855
1981	9824612	9824612		9824612	9824612				9824612			9824612
1982	19207020	19207020		19207020	19207020				19207020			19207020
1983	28745861	28745861		28745861	28745861				28745861			28745861
1984	45005841	45005841		45005841	45005841				45005841			45005841
1985	69529285	69529285		69529285	69529285				69529285			69529285
1986	97552865	97552865		97552865	97552865				97552865			97552865
1987	128915934	128915934		128915934	128915934				128915934			128915934
1988	161392122	161392122		161392122	161392122				161392122			161392122
1989	204787389	204787389		204787389	204787389				204787389			204787389
1990	242591295	242591295		242591295	242591295				242591295			242591295
1991	279071619	279071619		279071619	279071619				279071619			279071619
1992	313551702	313551702		313551702	313551702				313551702			313551702
1993	347270478	347270478		347270478	347270478				347270478			347270478
1994	380716554	380716554		380716554	380716554				380716554			380716554
1995	409760951	409760951		409760951	409760951				409760951			409760951
1996	439699580	439699580		439699580	439699580				439699580			439699580
1997	468603270	468603270		468603270	468603270				468603270			468603270
1998	495495703	495495703		495495703	495495703				495495703			495495703
1999	526849838	526849838		526849838	526849838				526849838			526849838
2000	562566283	562566283		562566283	562566283				562566283			562566283
2001	605719917	605719917		605719917	605719917				605719917			605719917
2002	651220017	651220017		651220017	651220017				651220017			651220017
2003	699656136	699656136		699656136	699656136				699656136			699656136
2004	736516410	736516410		736516410	736516410				736516410			736516410
2005	773992129	773992129		773992129	773992129				773992129			773992129
2006	812937745	812937745		812937745	812937745				812937745			812937745
2007	853887827	853887827		853887827	853887827				853887827			853887827
2008	886281123	886281123		886281123	886281123				886281123			886281123
2009	912037352	912037352		912037352	912037352				912037352			912037352
2010	932655588	932655588		932655588	932655588				932655588			932655588
2011	952087564	952087564		952087564	952087564				952087564			952087564
2012	969239502	969239502		969239502	969239502				969239502			969239502
2013	986124691	986124691		986124691	986124691				986124691			986124691
2014	1005676432	1005676432		1005676432	1005676432				1005676432			1005676432
2015	1025998469	1025998469		1025998469	1025998469				1025998469			1025998469
2016	1049537699	1049537699		1049537699	1049537699				1049537699			1049537699

Appendix C.3. LandGEM Modeling Results

Summary of LFG Generation Results for LandGEM Model Runs (Second data set with representative estimate of waste throughput)
WPWMA

Year	LFG Baseline (1979-2050) (cf/yr)	No Future Diversion			PC1&PC2	Plan Concept 1				Plan Concept 2		
		LFG (1979-2018) (cf/yr)	LFG (2019-2050) (cf/yr)	Total LFG (1979-2050) (cf/yr)	LFG (1979-2018) (cf/yr)	LFG (2019-2025) (cf/yr)	LFG (2026-2030) (cf/yr)	LFG (2031-2050) (cf/yr)	Total LFG (1979-2050) (cf/yr)	LFG (2019-2028) (cf/yr)	LFG (2029-2050) (cf/yr)	Total LFG (1979-2050) (cf/yr)
k	0.0325	0.0325	0.0325	0.0325	0.0325	0.0325	0.027	0.024	varies	0.0325	0.024	varies
Lo	115	115	100	varies	115	100	80	65	varies	100	65	varies
2017	1077033115	1077033115		1077033115	1077033115				1077033115			1077033115
2018	1109638447	1109638447		1109638447	1109638447				1109638447			1109638447
2019	1143906419	1143906419	0	1143906419	1143906419	0			1143906419	0		1143906419
2020	1177078585	1107327094	61866540	1169193634	1107327094	61866540			1169193634	61866540		1169193634
2021	1209189986	1071917486	122992070	1194909556	1071917486	122992070			1194909556	122992070		1194909556
2022	1240274544	1037640191	183425033	1221065224	1037640191	183425033			1221065224	183425033		1221065224
2023	1270365093	1004459000	243212817	1247671817	1004459000	243212817			1247671817	243212817		1247671817
2024	1299493421	972338862	302401799	1274740661	972338862	302401799			1274740661	302401799		1274740661
2025	1327690296	941245847	361037389	1302283236	941245847	361037389			1302283236	361037389		1302283236
2026	1354985504	911147111	419164070	1330311181	911147111	419164070	0		1330311181	419164070		1330311181
2027	1381407878	882010858	476825438	1358836296	882010858	405760230	43819568		1331590656	476825438		1358836296
2028	1406985329	853806312	534064240	1387870552	853806312	392785012	87348228		1333939551	534064240		1387870552
2029	1431744876	826503678	590922416	1417426094	826503678	380224709	130611257		1337339645	583191757	0	1409695435
2030	1455712673	800074115	647441132	1447515246	800074115	368066055	173633611		1341773781	564542713	29830341	1394447169
2031	1478914039	774489705	703660816	1478150521	774489705	356296204	216439937	0	1347225846	546490020	59549883	1380529608
2032	1501373482	749723421	759621199	1509344620	749723421	344902724	210674246	31035486	1336335878	529014608	89173186	1367911215
2033	1523114727	725749103	815361340	1541110443	725749103	333873580	205062145	61955698	1326640526	512098017	118714703	1356561823
2034	1544160741	702541425	870919667	1573461092	702541425	323197121	199599544	92775783	1318113872	495722377	148188788	1346452590
2035	1564533754	680075871	926334007	1606409878	680075871	312862069	194282460	123510777	1310731177	479870390	177609703	1337555964
2036	1584255288	658328711	981641616	1639970327	658328711	302857506	189107017	154175615	1304468849	464525310	206991623	1329845644
2037	1603346176	637276971	1036879214	1674156185	637276971	293172865	184069440	184785135	1299304412	449670929	236348648	1323296549
2038	1621826585	616898415	1092083010	1708981425	616898415	283797915	179166059	215354085	1295216474	435291554	265694806	1317884776
2039	1639716035	597171515	1147288737	1744460252	597171515	274722753	174393298	245897134	1292184700	421371997	295044061	1313587573
2040	1657033424	578075433	1202531678	1780607111	578075433	265937793	169747677	276428877	1290189779	407897553	324410319	1310383305
2041	1673797045	559589997	1257846693	1817436690	559589997	257433753	165225809	306963841	1289213401	394853988	353807438	1308251423
2042	1690024607	541695680	1313268250	1854963929	541695680	249201653	160824399	337516496	1289238227	382227525	383249230	1307172435
2043	1705733252	524373579	1368830450	1893204028	524373579	241232794	156540237	368101258	1290247868	370004825	412749473	1307127877
2044	1720939572	507605396	1424567052	1932172449	507605396	233518761	152370199	398732499	1292226855	358172977	442321913	1308100287
2045	1735659631	491373419	1480511504	1971884923	491373419	226051403	148311246	429424552	1295160620	346719483	471980274	1310073176
2046	1749908979	475660501	1536696961	2012357463	475660501	218822833	144360419	460191719	1299035471	335632243	501738262	1313031006
2047	1763702668	460450044	1593156317	2053606361	460450044	211825414	140514836	491048277	1303838572	324899546	531609574	1316959164
2048	1777055268	445725979	1649922225	2095648204	445725979	205051757	136771696	522008488	1309557919	314510055	561607902	1321843936
2049	1789980885	431472754	1707027120	2138499875	431472754	198494704	133128267	553086600	1316182326	304452794	591746943	1327672491
2050	1802493173	417675313	1764503248	2182178561	417675313	192147329	129581896	584296861	1323701399	294717139	622040401	1334432853

Note: The LandGem model runs were updated in this summary table to provide a more representative estimate of landfill gas generation.
This analysis does not include an overlap in waste placement throughput, when waste diversion rates are adjusted.
Therfore, this analysis data will be used for a more representative estimate of greenhouse gas emissions.

Appendix C.4
Air Dispersion and Health Risk Assessment Modeling Protocol

JACOBS

Renewable Placer

Air Dispersion and Health Risk Assessment Modeling Protocol

May 25, 2021

Western Placer Waste Management Authority

Introduction

This document describes proposed methods to complete a health risk assessment (HRA) to assess potential impacts to human health associated with the Renewable Placer: Waste Action Plan (proposed project). This methodology reflects the Placer County Air Pollution Control District (PCAPCD) 2017 CEQA Air Quality Handbook (PCAPCD, 2017) and Office of Environmental Health Hazard Assessment (OEHHA) 2015 *Guidance Manual for Preparation of Health Risk Assessments* (OEHHA, 2015).

1. Project Summary

The proposed project consists of two separate plan concepts, Plan Concept 1 and Plan Concept 2, which will be analyzed at an equal level. Plan Concept 1 and Plan Concept 2 include similar project elements, but the locations, timing, and characteristics of the elements differ. Proposed project elements are divided into solid waste project elements, complementary/programmatic elements, and supporting elements.

Solid waste project elements are the waste recovery and waste disposal project elements that are needed for Western Placer Waste Management Authority (WPWMA) to continue providing solid waste management services in the near and long term. These project elements include:

- Expanded Operation of the Materials Recovery Facility (MRF) Building
- Expanded and Redesigned Organics Management Operation (Includes Expanded and Redesigned Composting Operation)
- Expanded and Redesigned Construction and Demolition Materials Processing Operation
- Expanded and Redesigned Public Waste Drop-Off Area Operations
- Expanded Landfill Disposal Capacity
- Excavation, Relocation and Reburial of Solid Waste from Older, Unlined Sections of the Landfill

Complementary/programmatic elements are project elements that are not specifically required to provide continued solid waste management services to Participating Agencies but that are important in achieving other project objectives. These project elements include:

- Compatible Technologies
- Pilot Study Area
- University Research Area
- Landfill Gas (LFG) to Compressed Natural Gas (CNG) Area

Supporting elements are the project elements that are required to support the solid waste management and complementary/programmatic elements. These project elements include:

- Recovered Materials Storage Areas
- Stormwater Ponds
- Road Crossings
- Maintenance Areas
- Administrative Buildings
- Facility Parking
- Entrance Facilities

- Wastewater and Water Supply Infrastructure
- Continued Operation of the Existing Landfill Gas-to-Energy (LFGTE) Plant
- Site Perimeter Infrastructure

With the noted exception, solid waste project elements and supporting elements include those activities directly under WPWMA's control[1]. These elements will be evaluated at a project-specific level of detail. Complementary and programmatic elements include those activities that may require third-party involvement and are not fully defined at this time. Complementary/programmatic elements will be evaluated at a program level, with limited quantitative assessment.

Emissions will be estimated for the incremental increases in activity over time associated with Plan Concept 1 and Plan Concept 2 solid waste project elements and supporting elements. Baseline activity levels and future activity levels for the proposed project will be quantified in order to assess the change in activity associated with each plan concept. Emissions will then be estimated for the incremental increase in activity. The baseline year will be 2018, with the project timeframe spanning from the baseline year through 2050. Note that some activities, such as landfilling, are expected to extend beyond the project timeframe, but the analysis will focus on impacts through 2050 due to increasing uncertainty associated with operations occurring more than 30 years in the future.

2. Conducting a Health Risk Assessment

The process to complete an HRA requires both dispersion modeling of the Project-related emissions and characterizing the resultant exposures and health risks using approved risk assessment methodology. The Hotspot and Reporting Program version 2 (HARP2) will be used to calculate risk. This protocol describes the dispersion modeling approach and the use of HARP2 to characterize risk from the facility for comparison to the appropriate thresholds.

The HRA process requires four general steps to estimate health impacts:

(1) identify and quantify project-generated emissions;

(2) evaluate pollutant transport (using air dispersion modeling) to estimate ground-level toxic air contaminant (TAC) concentrations at each receptor location;

(3) assess human exposure; and

(4) use a risk characterization model to estimate the potential health risk at each receptor location.

The following sections describe the methods proposed for this HRA.

3. Air Dispersion Modeling Methodology

The American Meteorological Society/Environmental Protection Agency Regulatory Model (AERMOD) (Version 21112) will be used as recommended in the Environmental Protection Agency (EPA) Appendix W, Guideline on Air Quality Models (EPA, 2017).

AERMOD is a steady-state plume model that simulates air dispersion based on planetary boundary layer turbulence structure and scaling concepts, including treatment of both surface and elevated sources, and both simple and complex terrain. This model is recommended for short-range (less than 50 kilometers

[1] The existing landfill gas-to-energy plant is owned and operated by Energy 2001, Inc. under a long-term lease agreement with the WPWMA. The WPWMA does not have direct control over this operation.

dispersion from the source. The model incorporates the Plume Rise Model Enhancement (PRIME) algorithm for modeling building downwash. AERMOD is designed to accept input data prepared by two specific preprocessor programs, AERMET and AERMAP. AERMOD will be run with the following options:

- Direction-specific building downwash
- Regulatory default options
- Rural dispersion characteristics[2]
- Actual receptor elevations and hill height scales obtained from AERMAP (Version 18081)

3.1 Meteorological Data

A review of the completeness of the nearby meteorological datasets was performed to ensure the selected dataset meets EPA minimum requirement of 90% complete before any data substitution (EPA, 2000). Five years of meteorological data were obtained and processed by Jacobs for the Sacramento International Airport (WBAN ID 93225). The most recent five years of data were processed with AERMET Version 21112 for 2015 through 2019. Upper air data were obtained from the Oakland International Airport station (WBAN ID 23230). The Sacramento International Airport is located approximately 15 southwest miles from the Project and was selected for this analysis since it is the closest airport with 1-minute automated surface observation station (ASOS) data as well as its similar surrounding land cover as the Project. The nearest airport to the Project is the Lincoln Regional Airport located approximately 5 miles north of the Project. The Lincoln Regional Airport was not selected for this analysis because it does not have 1-minute ASOS data sufficient for purposes of dispersion modeling.

All years of meteorological data proposed for this analysis are greater than 99% complete and do not require data substitution. A summary of the meteorological data is included in Table 1. A wind rose for these data is additional included as Figure 1.

Table 1. Meteorological Data Summary

Year	2015	2016	2017	2018	2019
Total Possible Records	8760	8784	8760	8760	8760
Available Records	8715	8742	8709	8732	8723
Calm Records	108	69	96	79	145
Missing/Incomplete Records	45	42	51	28	37
Completeness Percent	99.5%	99.5%	99.4%	99.7%	99.6%

[2] The Project is located in a rural location surrounded by open fields as illustrated in Figure 3.

Figure 1. Meteorological Data Wind Rose

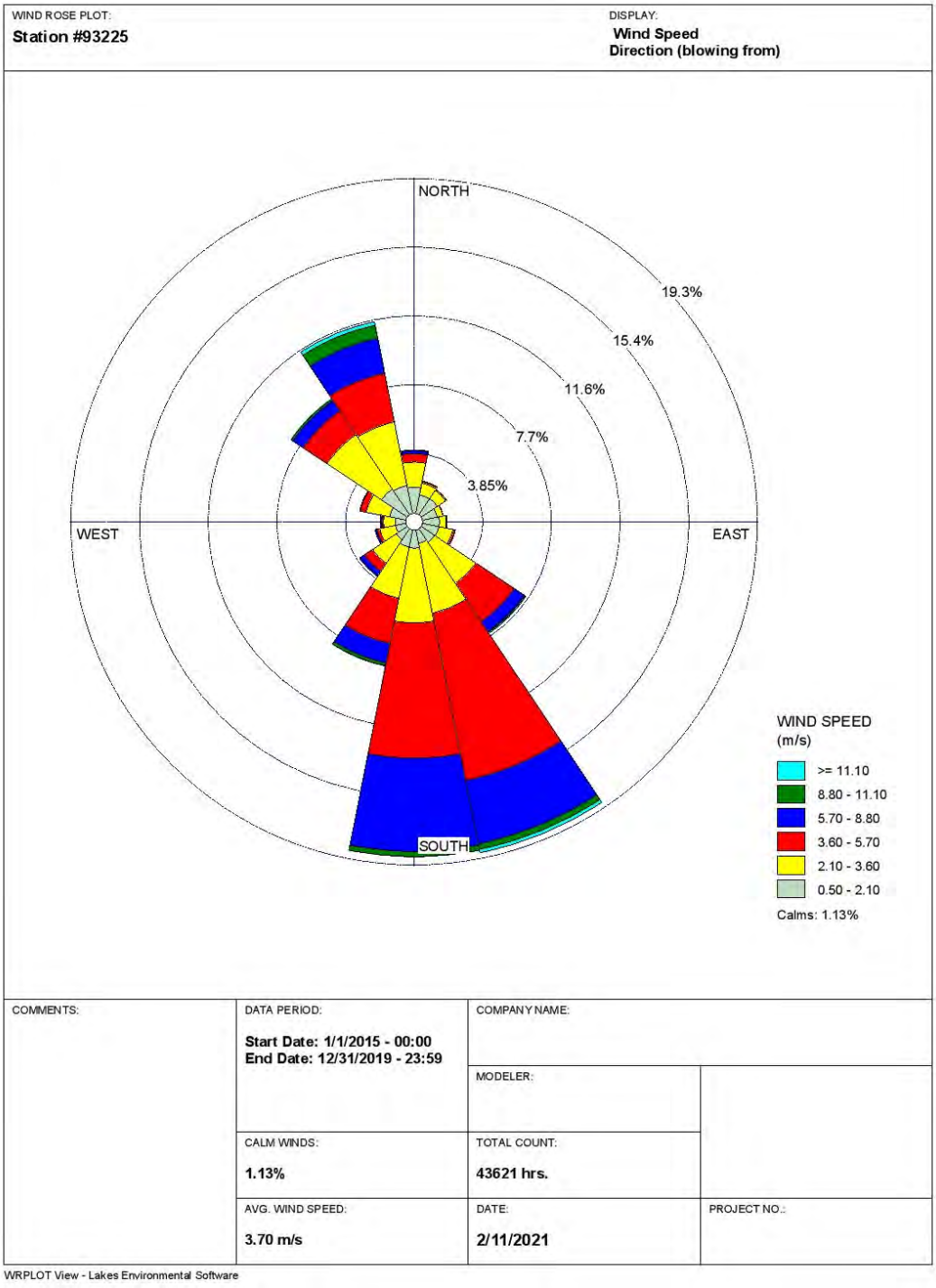

3.3 Cartesian Grid Receptors

The selection of receptors in AERMOD will use a nested Cartesian grid as follows:

- 25-meter (m) spacing along the fenceline
- 25-m spacing from the fenceline to 100 m from grid origin
- 50-m spacing from beyond 100 m to 500 m from the fenceline
- 250-m spacing from beyond 500 m to 5,000 m from the fenceline
- 500-m spacing from beyond 5,000 m to 10,000 m from the fenceline

Discrete cartesian gridded receptors located within the land use types listed below will be classified and analyzed as sensitive receptors.

- Residential
- Certain commercial
- Schools
- Hospitals
- Daycares
- Recreational Areas
- 25-meter grid at the onsite groundskeeper residence[3]

If the maximum receptor lies outside of the 50-m receptor grid, a refined grid with 50-m spacing will be placed around the maximum receptor and AERMOD will be re-run. Additionally, if the concentration gradient shows increasing concentrations at the extent of the receptor grid, the grid will be extended up to 15-kilometers from the site to make sure the maximum predicted concentrations are captured by the AERMOD model.

This risk analysis will analyze both existing receptor locations to assess project-related impacts, as well as a future receptor location scenario for purposes of a cumulative assessment. The existing receptor locations will be characterized based on current land use types and buildings, and the future receptor locations will be characterized based on future developments including residential communities, businesses, and sensitive receptors such as schools.

The proposed receptor grid and sensitive receptor locations are illustrated in Figure 2. All receptors and source locations will be expressed in the Universal Transverse Mercator North American Datum 1983, Zone 10 coordinate system (meters).

[3] Although the groundskeeper residence is located within the project boundary, it is considered an ambient air receptor for purposes of this health risk assessment.

Figure 2. Receptor Grid

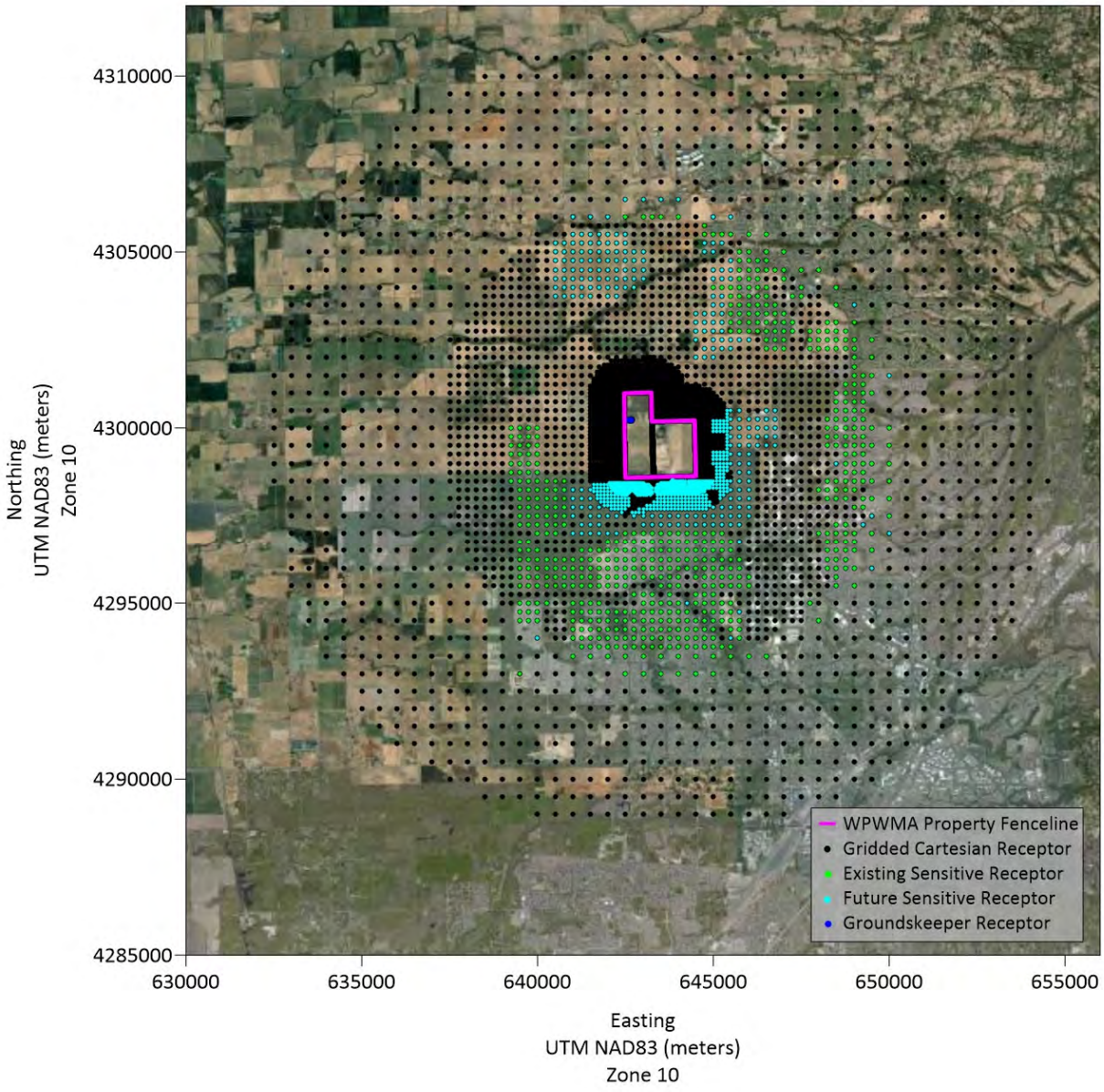

3.4 Fenceline

The ambient air boundary will be defined by the fenceline surrounding the WPWMA-owned property, within which public access is limited. Figure 3 represents the location of the Project and the associated fenceline.

Figure 3. WPWMA Project Location and Fenceline

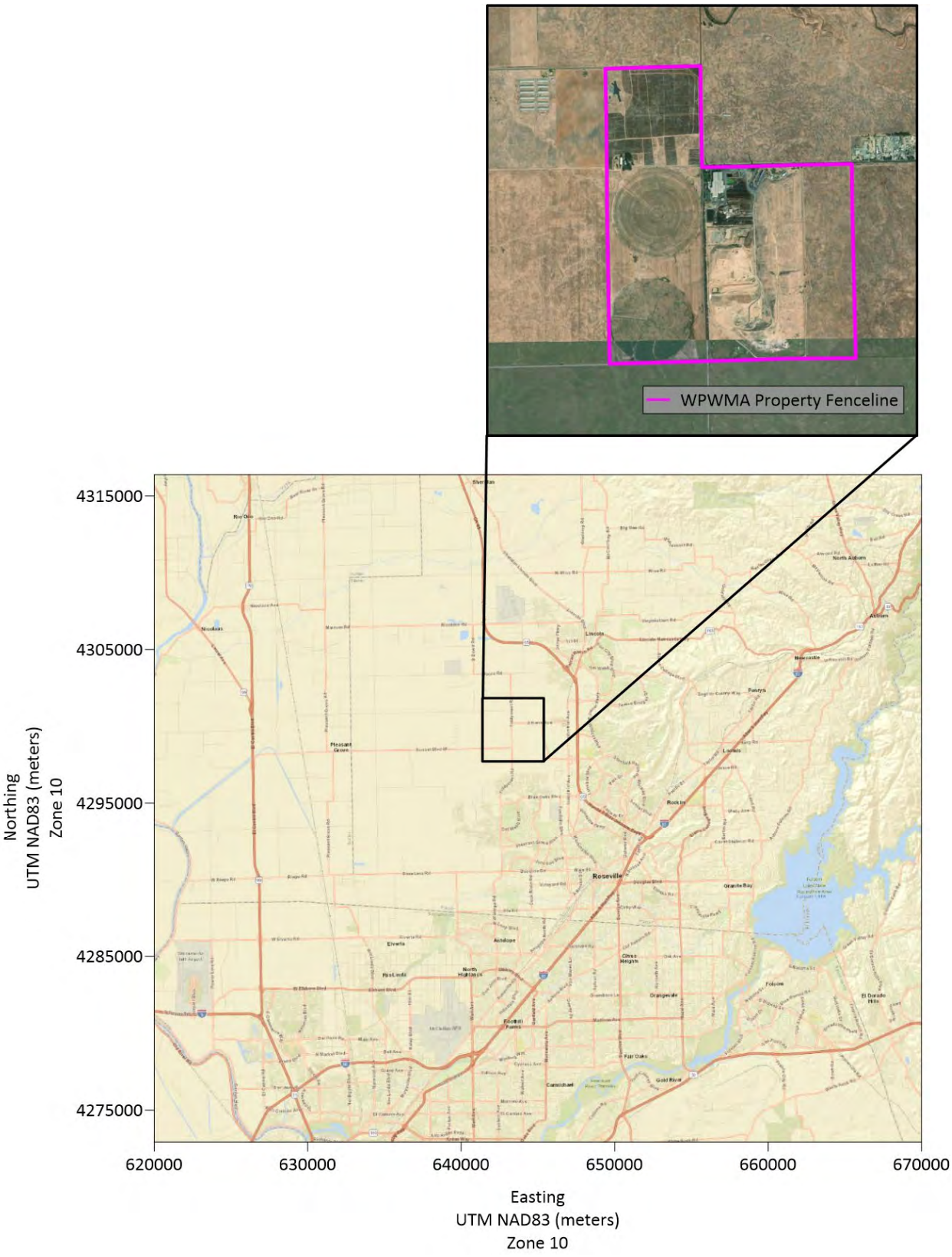

3.5 Building Downwash

Building influences on stationary stacks are calculated by incorporating the updated EPA Building Profile Input Program for use with the plume-rise model-enhancement algorithm (BPIP-PRIME). The stack heights used in the dispersion modeling will be the actual stack height or good engineering practice stack height, whichever is less. A list of all building inputs used in the modeling will be included in the Final Report as an attachment to the Draft Environmental Impact Report (DEIR).

3.6 Source Characterization

Consistent with HRA guidance (OEHHA, 2015), all sources will be modeled with a 1 gram per second emission rate. For sources that are characterized as a group of sources, the 1 gram per second emission rate will be evenly apportioned over the total number of individual sources. The subsections below describe how the sources identified for the Project would be characterized in the AERMOD dispersion model.

3.6.1 Landfill Modules

Landfill operations at the facility are split into specific landfill modules which are operated one at a time. Each landfill module in each of the Project Plan Concepts will be modeled as its own area poly (AREAPOLY) source in AERMOD. Source parameters for these sources will be included in the Final Modeling Report as an attachment to the Draft Environmental Impact Report (DEIR).

3.6.2 Composting Operations

Composting operations in each Project Plan Concept will include emissions from mobile sources such as diesel construction-type equipment, compost curing piles, and compost active storage piles. Each of the active storage piles and curing piles will be modeled as an area source (AREA).

Diesel equipment used to maintain the composting piles will be modeled as a grid of point sources (POINT) with a horizontal stack release spaced approximately 25 m apart over the entire composting area. The horizontal release type is an AERMOD option which negates mechanical plume rise. This conservative approach will be used because it is unknown if all construction equipment will have vertically oriented exhaust stacks. Source parameters for these sources will be included in the Final Modeling Report as an attachment to the Draft Environmental Impact Report (DEIR).

3.6.3 Construction and Demolition Operations

Construction and demolition operations will include emissions from mobile sources such as diesel construction-type equipment. Equipment emissions will be evenly distributed and modeled as a grid of point (POINT) sources with a horizontal stack release spaced approximately 25 m apart over the entire composting area. The horizontal release type is an AERMOD option which negates mechanical plume rise. This conservative approach will be used because it is unknown if all construction equipment will have vertically oriented exhaust stacks. Source parameters for these sources will be included in the Final Modeling Report as an attachment to the Draft Environmental Impact Report (DEIR).

3.6.4 Compatible Manufacturing

Operations and emissions associated with the compatible manufacturing areas are unknown, however emissions will be based on the approximate square footage of the manufacturing facility. Some future processes may require approval on a project-specific basis. As a result of the potential variation in these operations and emissions, estimated hypothetical emissions will be modeled as area poly (AREAPOLY) sources across all potential areas where compatible manufacturing emissions may occur. Source parameters for these sources will be included in the Final Modeling Report as an attachment to the Draft Environmental Impact Report (DEIR).

3.6.5 Onsite Roads

Onsite road emissions will occur from worker commute, utility vehicles, waste haul trucks, and public drop-off operations. All onsite traffic and vehicle routes and associated emissions will be modeled as line sources (LINE) with source parameters developed based upon the U.S. EPA *Haul Road Workgroup Final Report Submission to EPA-OAQPS* (EPA, 2012). Emissions will be calculated for input into AERMOD based upon the length of specific route. The total emissions of the specific route will be divided by the total length of the route and multiplied by the specific length of each line source for an even distribution. Source parameters for these sources will be included in the Final Modeling Report as an attachment to the Draft Environmental Impact Report (DEIR).

3.6.6 Offsite Roads

Offsite road emissions will occur from worker commute, off-site utility vehicles, waste haul trucks, and public drop-off operations. All offsite traffic routes and associated emissions will be modeled as line sources with source parameters developed based upon the U.S. EPA *Haul Road Workgroup Final Report Submission to EPA-OAQPS* (EPA, 2012). Emissions will be calculated for input into AERMOD based upon the length of specific route. The total emissions of the specific route will be divided by the total length of the route and multiplied by the specific length of each line source for an even distribution. Source parameters for these sources will be included in the Final Modeling Report as an attachment to the Draft Environmental Impact Report (DEIR).

3.6.7 Flares

Emissions from the main facility flare and secondary flare will be modeled as point (POINT) sources. Source parameters for these sources will be included in the Final Modeling Report as an attachment to the Draft Environmental Impact Report (DEIR).

3.6.8 Landfill Gas-to-Energy Plant

Emissions from the generator engines associated with the onsite LFGTE plant will be modeled as point (POINT) sources. Source parameters for these sources will be included in the Final Modeling Report as an attachment to the Draft Environmental Impact Report (DEIR).

3.6.9 Generators

Emissions from new onsite emergency generators will be modeled as point (POINT) sources. Source parameters for these sources will be included in the Final Modeling Report as an attachment to the Draft Environmental Impact Report (DEIR).

3.6.10 Materials Recovery Facility

Emissions from the MRF include diesel construction-type equipment and will occur within a large building with large openings along the walls of the building as well as through roof vents. These emissions will be characterized as a grid of volume (VOLUME) sources with 25 m spacing across the MRF building footprint with emissions evenly distributed between all volume sources. Source parameters for these sources will be included in the Final Modeling Report as an attachment to the Draft Environmental Impact Report (DEIR).

3.7 Dispersion Modeling Results

The results from this proposed dispersion modeling analysis will include the maximum 1-hour and annual concentrations at each modeled receptor for each source. These AERMOD predicted concentrations will be used as inputs for the health risk assessment modeling analysis.

4. Health Risk Assessment Methodology

4.1 Emission Inventory

The emissions profiles for each of the modeled sources are outlined below.

4.1.1 Landfill Modules

The landfill gas generation rate estimates are based on the EPA Landfill Gas Emissions Model (LandGEM), version 3.03, 2020. Inputs for the model include in-place and projected refuse amounts, period of operation (years), ultimate methane generation potential ("L_0" value), and the refuse decay rate coefficient ("k" value). Individual TAC emission rates are calculated by multiplying the fugitive LFG emission rate by the concentrations of each TAC in the LFG. Average concentrations of compounds found in LFG are based on the Waste Industry Air Coalition (WIAC) Comparison of Recent Landfill Gas Analyses with Historic AP-42 Values (WIAC, 2001).

LFG throughput for the flares was estimated based on operating records and the future capacity. Similar to the fugitive LFG, the individual TAC emissions rates are calculated by multiplying the volume of flared gas by the concentrations defined by WIAC. The emissions estimates for the flares also incorporate a destruction efficiency, which reduce volatile TAC emissions by 98 to 99.7 percent.

Diesel off-road equipment used to construct and maintain the landfill operations will emit diesel particulate matter (DPM). DPM emissions are estimated using emission factors taken from Appendix D of the CalEEMod User's Guide (CAPCOA, 2017). Emission factors are defined by equipment type, year, and size rating. Particulate matter (PM_{10}) emissions in diesel fueled equipment exhaust are considered equivalent to DPM.

4.1.2 Composting Operations

Composting emissions will include TACs (ammonia and volatile TACs) resulting from active composting and curing. The emission factor for ammonia is defined by the California Air Resources Board (ARB) Emissions Inventory Methodology for Composting Facilities (ARB, 2015a). The emission factors for other volatile TACs are obtained from the Atmospheric Environment Journal study done by UC Davis and CalRecycle: Volatile Organic Compound Emissions from Green Waste Composting: Characterization and Ozone Formation (AE, 2011).

Diesel equipment used to maintain the composting piles will emit DPM. DPM emissions are estimated using emission factors taken from Appendix D of the CalEEMod User's Guide (CAPCOA, 2017). Emission factors are defined by equipment type, year, and size rating. PM_{10} emissions in diesel fueled equipment exhaust are considered equivalent to DPM.

4.1.3 On-Road Mobile Source Emissions (Onsite Road and Offsite Roads)

On-road vehicle exhaust emissions will be estimated using average emission factors for the PCAPCD obtained from ARB's emission inventory tool ("EMission FACtor," EMFAC2017). Emission factors are defined in terms of pounds per vehicle mile traveled. TAC emissions from mobile sources will be limited to DPM. Traffic-flow and vehicle quantities are defined for vehicles entering and exiting specific area of the landfill operation. On-road vehicle counts for the project buildout year will be based on actual vehicles recorded in the 2018 baseline year and an assumed annual increase to account for waste growth and facility usage over time. The average waste haul truck trip distance will be based on trip origin data collected at the WPWMA scale houses for the 2018 baseline year and adjusted to account for waste growth over time based on population forecast data provided in general plans for the surrounding areas. Vehicle traffic related to transport of the solid waste associated with the proposed project includes both commercial haulers and self-haul vehicles. Commercial haulers bring collected waste to the site in medium to heavy duty haul trucks. Self-haul traffic includes small businesses (i.e. landscaper and

contractors) and the public. Once onsite, dedicated operational on-road vehicles and off-road equipment move materials between the various waste recovery and disposal facilities.

4.1.4 Landfill-Gas-to-Energy Plant

The LFGTE Plant is used to produce electricity using LFG as fuel. The facility will include six (6) Caterpillar 3516 Electricity Generators, which will provide auxiliary power for the landfill and associated operations. The individual TAC emissions are calculated by multiplying the LFG combustion rates in each engine by the concentrations defined by WIAC.

4.1.5 Emergency Generators

Three (3) gasoline-fired generators will be used for emergency power. The gasoline generators will provide power for the scale house. The individual TAC emissions will include the organic and inorganic compound TAC emissions, estimated conservatively using emission factors from AP-42, Section 3.3, Gasoline Industrial Engines.

4.1.6 Materials Recovery Facility

Diesel equipment used at the MRF will emit DPM. DPM emissions are estimated using emission factors taken from Appendix D of the CalEEMod User's Guide (CAPCOA, 2017). Emission factors are defined by equipment type, year, and size rating. PM_{10} emissions in diesel fueled equipment exhaust are considered equivalent to DPM.

4.2 Model Selection

The most recent version of Hotspots Analysis and Reporting Program (HARP2) (Version 21081[4]), with the revised unit risk and cancer potency values updated in October 2020, will be used for this analysis. The updated sensitivity factors will be applied in accordance with the *Risk Management Guidance for Stationary Sources of Air Toxics* (ARB, 2015b).

To account for particle toxics deposition on vegetation and the soil, the deposition rate modeled in HARP2 will be conservatively set to 0.05 meters per second for uncontrolled sources for preliminary analysis.

4.3 Risk Evaluation

Risk characterization for toxics emitted by the facility will be conducted using procedures specified by OEHHA guidance (OEHHA, 2015).

As recommended by the 2015 OEHHA and ARB Guidance, a Tier 1 assessment will be performed. The Tier 1 assessment is the most conservative of the four Tier assessment methodologies identified in the OEHHA Guidance and uses a standard point-estimate approach with standard OEHHA assumptions.

The proposed risk assessment will evaluate both carcinogenic (cancer) and non-carcinogenic (non-cancer) health risks as described below for two exposure scenarios. The receptor grids described in Section 3.2 include one run for the existing receptor grid and one for the future receptor grid inclusive of future development plans.

4.3.1 Carcinogenic Risk

Potential cancer risks for residential and sensitive receptors will be evaluated using a scenario assuming 30-year continuous exposure duration, and potential cancer risks for worker and commercial/industrial

[4] https://ww2.arb.ca.gov/resources/documents/harp-air-dispersion-modeling-and-risk-tool

receptors will be evaluated using a scenario assuming a 25-year workplace exposure duration (8-hours per day starting at age 16-years old), as recommended in the OEHHA Guidelines (OEHHA, 2015). Based on the *Risk Management Guidance for Stationary Sources of Air Toxics*, the Derived (Adjusted) Method in HARP2 will be used for the cancer risk evaluation, which uses the 95th percentile breathing rate from the 3rd trimester to 2 years and the 80th percentile inhalation rate from 2 years to 70 years as exposure assumptions for residential cancer risk assessments (ARB, 2015b).

Cancer risks will evaluated based on the annual project-related TAC emission rates from the emission inventory, ground-level concentrations obtained from the dispersion modeling analysis, and values for inhalation cancer potency, oral slope factor, frequency and duration of exposure at the receptor, age-specific sensitivity factors, and breathing rates of the exposed persons from the HARP model. Cancer risk results are expressed as the incremental increase in lifetime cancer risk above baseline levels of risk, typically as a predicted number (of persons) per one million individuals.

4.3.2 Non-Carcinogenic Chronic Exposure

Chronic toxicity is defined as adverse health effects from prolonged chemical exposure caused by chemicals accumulating in the body. To assess chronic noncancer exposures, modeled TAC ground-level concentrations are compared to chemical-specific reference exposure levels (RELs) developed by OEHHA to obtain a chronic hazard index. The REL is a concentration in ambient air at, or below which, no adverse health effects are anticipated. Noncancer chronic health risks are calculated as a hazard quotient, which is the modeled exposure concentration of each contaminant divided by its REL. Hazard quotients for pollutants affecting the same target organ are summed with the resulting totals expressed as hazard indices (HI) for each organ system.

4.3.3 Non-Carcinogenic Acute Exposure

Acute toxicity is defined as adverse health effects caused by a brief chemical exposure of no more than 24 hours. To assess acute noncancer exposures, modeled 1-hour TAC ground-level concentrations are compared to chemical-specific acute RELs to obtain an acute hazard index. Similar to assessing chronic noncancer health risks, acute health risks are calculated as a hazard quotient, which is the modeled exposure concentration of each contaminant divided by its REL. Hazard quotients for pollutants affecting the same target organ are summed with the resulting totals expressed as hazard indices for each organ system.

4.4 Exposure Pathways

For this risk analysis, the following exposure pathways will be included for each risk scenario.

Table 2 Exposure Pathways

Risk Analysis	Model Exposure Pathways	Intake Rate Percentile
Acute	Inhalation	N/A
Non-Cancer Chronic	Inhalation Soil Ingestion Dermal Absorption Mother's Milk Homegrown Produce Beef/Dairy (Farming) Pig/Chicken/Egg (Farming)	N/A
Cancer	Inhalation Soil Ingestion Dermal Absorption Mother's Milk Homegrown Produce Beef/Dairy (Farming) Pig/Chicken/Egg (Farming)	CARB Risk Management Policy Using the Derived Method

4.5 Thresholds

The risk evaluation methodology described above will be used to predict potential excess lifetime cancer risks, chronic health hazard impacts, and acute health hazard impacts. Using the receptor grids described in Section 3.2, cancer, chronic, and acute health risks will be estimated for the locations of the hypothetical maximally exposed individual at a residential location (MEIR), the maximally exposed individual at a workplace location (MEIW), and at sensitive receptors within 10 kilometers from the proposed project site. The modeled point of maximum impacts (PMI) health risk values will be reported as well. For the overall project and cumulative impact analyses, the risk results predicted at the MEIR, MEIW, and sensitive receptor locations will be compared to the following thresholds from the PCAPCD's recommended thresholds[5] of significance (PCAPCD, 2017):

- Incremental increase in cancer risk of 10 in one million individuals
- Chronic hazard index of 1.0
- Acute hazard index of 1.0

5. Presentation of Results

After completion of the HRA, a technical report will outline the approach of the analysis, summarize the results of the analysis, and include electronic files of the dispersion modeling and HARP2 analysis. Comments on this modeling protocol by PCAPCD will also be incorporated into the Final Report as an appendix to the Draft Environmental Impact Report.

6. References

Atmospheric Environment (AE). 2011. Volatile Organic Compound Emissions from Green Waste Composting: Characterization and Ozone Formation. January.

[5] https://www.placer.ca.gov/DocumentCenter/View/2044/Appendix-G-Preparing-a-Health-Risk-Assessment-for-Land-Use-Projects-PDF

California Air Pollution Control Officers Association (CAPCOA). 2017. *California Emissions Estimator Model (CalEEMod) User's Guide*. November.

California Air Resources Board (ARB). 2015a. *California ARB Emissions Inventory Methodology for Composting Facilities*. March.

California Air Resources Board (ARB). 2015b. *Risk Management Guidance for Stationary Sources of Air Toxics*, California Air Pollution Control Officers Association. July.

California Air Resources Board (ARB). 2017. *EMFAC2017 Web Database. Website: https://arb.ca.gov/emfac/2017/*.

Office of Environmental Health Hazard Assessment (OEHHA). 2015. *Guidance Manual for Preparation of Health Risk Assessments*, Air, Community, and Environmental Research Branch. February.

Placer County Air Pollution Control District (PCAPCD). 2017. CEQA Air Quality Handbook.

U.S. Environmental Protection Agency (EPA). 2017. *Appendix W of 40 CFR Part 51—Guideline On Air Quality Models (Revised)*, Office of Air Quality Planning and Standards, Research Triangle Park, North Carolina. January.

U.S. Environmental Protection Agency (EPA). 2012. *U.S. EPA Haul Road Workgroup Final Report Submission to EPA-OAQPS*. March.

U.S. Environmental Protection Agency (EPA). 2000. *Meteorological Monitoring Guidance for Regulatory Modeling Applications*, Office of Air Quality Planning and Standards, Research Triangle Park, North Carolina. February.

WIAC, 2001. Waste Industry Air Coalition Comparison of Recent Landfill Gas Analyses with Historic AP-42 Values, January 2001.

Appendix C.5
Health Risk Assessment Modeling Report

Renewable Placer: Waste Action Plan

Health Risk Assessment Modeling Report

August 2, 2021

Western Placer Waste Management Authority

Contents

1. Introduction 1
2. Project Summary 1
3. Health Risk Assessment 2
4. Air Dispersion Modeling Methodology 3
   - 4.1 Meteorological Data 3
   - 4.2 Cartesian Grid Receptors 4
   - 4.3 Fenceline 6
   - 4.4 Building Downwash 8
   - 4.5 Source Characterization 8
     - 4.5.1 Landfill Modules 8
     - 4.5.2 Composting Operations 8
     - 4.5.3 Construction and Demolition Materials Processing Operations 9
     - 4.5.4 Onsite Roads 10
     - 4.5.5 Offsite Roads 10
     - 4.5.6 Flares 10
     - 4.5.7 Landfill Gas-to-Energy Plant 11
     - 4.5.8 Generators 11
     - 4.5.9 Materials Recovery Facility 11
     - 4.5.10 Facility Construction 12
     - 4.5.11 Waste Relocation 12
5. Health Risk Assessment Methodology 13
   - 5.1 Emission Inventory 13
     - 5.1.1 Landfill Modules 13
     - 5.1.2 Composting Operations 14
     - 5.1.3 On-Road Mobile Source Emissions (Onsite Road and Offsite Roads) 14
     - 5.1.4 Landfill-Gas-to-Energy Plant 14
     - 5.1.5 Emergency Generators 14
     - 5.1.6 Materials Recovery Facility 14
     - 5.1.7 Construction Operations 15
   - 5.2 Model Selection 15
6. Risk Evaluation 15
7. Exposure Pathways 16
8. Thresholds 16
9. Results 17
10. References 20

Appendixes

A Building Downwash Inputs
B Source Layout
C Health Risk Contour Plots
D Groundskeeper Risk Results

Tables

1 Meteorological Data Summary 4
2 Landfill Module Source Parameters 8
3 Compost Area Source Parameters 9
4 Compost Area Equipment Source Parameters 9
5 Construction and Demolition Materials Processing Equipment Source Parameters 9
6 Onsite Road Source Parameters 10
7 Offsite Road Source Parameters 10
8 Flare Source Parameters 11
9 Landfill Gas-to-Energy Plant Engine Source Parameters 11
10 Gasoline Emergency Generator Source Parameters 11
11 Materials Recovery Facility Source Parameters 12
12 Exposure Pathways 16
13 Plan Concept 1 Health Risk Assessment Cancer Risk Summary 17
14 Plan Concept 2 Health Risk Assessment Cancer Risk Summary 18
15 Plan Concept 1 Health Risk Assessment Noncancer Chronic Risk Summary 18
16 Plan Concept 2 Health Risk Assessment Noncancer Chronic Risk Summary 18
17 Plan Concept 1 Health Risk Assessment Noncancer Acute Risk Summary 19
18 Plan Concept 2 Health Risk Assessment Noncancer Acute Risk Summary 19

Figures

1 Meteorological Data Wind Rose 5
2 Receptor Grid 6

1. Introduction

This document describes the basis and results of the health risk assessment (HRA) conducted to assess potential impacts to human health associated with the Renewable Placer: Waste Action Plan (proposed project). The methodology used reflects the Placer County Air Pollution Control District (PCAPCD) *2017 CEQA Air Quality Handbook* (PCAPCD 2017) and Office of Environmental Health Hazard Assessment (OEHHA) 2015 *Guidance Manual for Preparation of Health Risk Assessments* (OEHHA 2015).

This HRA follows the protocol submitted to PCAPCD on May 27, 2021. As of the time this report was prepared, the Western Placer Waste Management Authority (WPWMA) had not received comments on, or approval of, the protocol from PCAPCD. This analysis deviates from the protocol in the following areas:

- The protocol submitted to PCAPCD stated that the 1 gram per second (g/s) emission rate would be evenly apportioned with American Meteorological Society/Environmental Protection Agency Regulatory Model (AERMOD) across all sources in a single source group. The analysis described herein modeled 1 g/s for all sources in a single source group and applied a factor of 1/(Number of sources in source group) to the emissions input into the Hotspots Analysis and Reporting Program (HARP2) health risk assessment modeling.
- There have been revisions to the facility emission inventory since the submittal of the protocol, which include new sources not originally identified. The new sources and their parameters are detailed in this modeling analysis.
- Updates to timing of completion of Plan Concept 1 and Plan Concept 2 have resulted in the need to remove the onsite groundskeeper housing prior to completion of the proposed project. Therefore, the risk results at the groundskeeper residence location are presented as Appendix D to this report for informational purposes only, and comparison to the significance criteria is not applicable.

2. Project Summary

The proposed project consists of two separate plan concepts analyzed as part of this HRA: Plan Concept 1 and Plan Concept 2. Plan Concept 1 and Plan Concept 2 include similar project elements, but the locations, timing, and characteristics of the elements differ. Proposed project elements are divided into solid waste project elements, complementary and programmatic elements, and supporting elements.

Solid waste project elements are the waste recovery and waste disposal project elements required for WPWMA to continue providing solid waste management services in the near and long term. These project elements include the following:

- Expanded operation of the materials recovery facility (MRF) building
- Expanded and redesigned organics management operation (includes expanded and redesigned composting operation)
- Expanded and redesigned construction and demolition materials processing operation
- Expanded and redesigned public waste drop-off area operations
- Expanded landfill disposal capacity
- Excavation, relocation and reburial of solid waste from older, unlined sections of the landfill

Complementary and programmatic elements are project elements not specifically required to provide continued solid waste management services to Participating Agencies but that are important in achieving other project objectives. These project elements include the following:

- Compatible technologies
- Pilot study area
- University research area
- Landfill gas (LFG)-to-compressed natural gas area

Supporting elements are the project elements are required to support the solid waste management and complementary and programmatic elements. These project elements include the following:

- Recovered materials storage areas
- Stormwater ponds
- Road crossings
- Maintenance areas
- Administrative buildings
- Facility parking
- Entrance facilities
- Wastewater and water supply infrastructure
- Continued operation of the existing landfill gas-to-energy (LFGTE) plant
- Site perimeter infrastructure

With the noted exception, solid waste project elements and supporting elements include those activities directly under WPWMA's control.[1] These elements have been evaluated at a project-specific level of detail. Complementary and programmatic elements include those activities requiring third-party involvement and are not fully defined at this time. Complementary and programmatic elements have been evaluated at a program level, with limited quantitative assessment.[2]

Emissions were estimated for the incremental increases in activity over time associated with the Plan Concept 1 and Plan Concept 2 solid waste project elements and supporting elements. Baseline activity levels and future activity levels for the proposed project were quantified in order to assess the change in activity associated with each plan concept. Emissions were then estimated for the incremental increase in activity. The baseline year is 2018, with the project timeframe spanning from the baseline year through 2050. Note that some activities, such as landfilling, are expected to extend beyond the project timeframe, but the analysis focused on impacts through 2050 because of increasing uncertainty associated with operations occurring more than 30 years in the future.

3. Health Risk Assessment

The HRA for the project-related net emissions increases was prepared by predicting pollutant concentrations, using an approved air dispersion model, then characterization of the resultant exposures and health risks by using the approved risk assessment methodology from the OEHHA Guidance (OEHHA 2015). The AERMOD dispersion modeling system was used to predict pollutant concentrations, and the HARP2 was used to calculate risk.

This HRA included four general steps to estimate health impacts:

1) Identification and quantification of project-generated emissions

[1] The existing LFGTE plant is owned and operated by Energy 2001, Inc. under a long-term lease agreement with WPWMA. WPWMA does not have direct control over this operation.

2 Quantitative assessment included construction and operation of 300,000 square feet of building space and 300,000 square feet of parking and roads for complementary and programmatic elements. This analysis did not evaluate the timing or impacts of full buildout of 1,900,000 square feet of building space and of associated parking and roads for complementary and programmatic elements, nor did it provide project-level analysis of the air quality impacts of construction and operation of specific types of industrial activities. Additional project-level analysis and air permits from PCAPCD may be required prior to construction.

2) Evaluation of pollutant transport (using air dispersion modeling) to estimate ground-level toxic air contaminant (TAC) concentrations at each receptor location
3) Assessment of human exposure
4) Use of a risk characterization model to estimate the potential health risk at each receptor location

The following sections describe the methods and results for this HRA.

4. Air Dispersion Modeling Methodology

AERMOD (Version 21112) was used, as recommended in the Environmental Protection Agency (EPA) Appendix W, *Guideline on Air Quality Models* (EPA 2017).

AERMOD is a steady-state plume model that simulates air dispersion based on planetary boundary layer turbulence structure and scaling concepts, including treatment of both surface and elevated sources, and both simple and complex terrain. This model is recommended for short-range (less than 50 kilometers) dispersion from the source. The model incorporates the Plume-Rise Model-Enhancement algorithm for modeling building downwash. AERMOD is designed to accept input data prepared by two specific preprocessor programs: AERMET and AERMAP. AERMOD was run with the following options:

- Direction-specific building downwash
- Regulatory default options
- Rural dispersion characteristics[3]
- Actual receptor elevations and hill height scales obtained from AERMAP (Version 18081)

4.1 Meteorological Data

A review of the completeness of the nearby meteorological datasets was performed to confirm that the selected meteorological dataset met the EPA requirement of greater than 90 percent complete before any data substitution (EPA 2000). Five years of meteorological data were obtained and processed for the Sacramento International Airport (WBAN ID 93225). The most recent 5 years of data were processed with AERMET Version 21112 for calendar years 2015 through 2019. Upper air data were obtained from the Oakland International Airport station (WBAN ID 23230). The Sacramento International Airport is located approximately 15 miles southwest from the proposed project and was selected for this analysis because it is the closest airport with 1-minute automated surface observation station (ASOS) data, and the surrounding land cover is similar to the proposed project. The nearest airport to the proposed project is the Lincoln Regional Airport located approximately 5 miles north of the project. The Lincoln Regional Airport was not selected for this analysis, because there is not 1-minute ASOS data recommended for purposes of dispersion modeling.

All years of meteorological data used for this analysis are greater than the 90 percent completeness requirement and did not require data substitution. A summary of the meteorological data is included in Table 1. A wind rose for these data is included as Figure 1.

[3] The proposed project is located in a rural location surrounded by open fields as illustrated in Figure 3.

Table 1. Meteorological Data Summary

Year	2015	2016	2017	2018	2019
Total Possible Records	8,760	8,784	8,760	8,760	8,760
Available Records	8,715	8,742	8,709	8,732	8,723
Calm Records	108	69	96	79	145
Missing/Incomplete Records	45	42	51	28	37
Completeness Percentage	99.5%	99.5%	99.4%	99.7%	99.6%

4.2 Cartesian Grid Receptors

Receptors are identified locations in the dispersion model to predicted concentrations of modeled pollutants. The receptors included in AERMOD were developed as a nested Cartesian grid as follows:

- 25-meter (m) spacing along the fenceline
- 25-m spacing from the fenceline to 100 m from grid origin
- 50-m spacing from beyond 100 m to 500 m from the fenceline
- 250-m spacing from beyond 500 m to 5,000 m from the fenceline
- 500-m spacing from beyond 5,000 m to 10,000 m from the fenceline

For purposes of an HRA, each receptor would then be characterized as either a residential, or residential or worker receptor type. The Cartesian gridded receptors located within the land-use types listed as follows were classified and analyzed as residential and sensitive receptors:

- Residential
- Certain commercial
- Schools
- Hospitals
- Daycares
- Recreational areas
- 25-meter grid at the onsite groundskeeper residence[4]

Risk was analyzed for existing receptor locations to assess project-related impacts and for a potential future receptor location scenario for purposes of cumulative assessment. The existing receptor locations were characterized based on current land-use types and buildings. For the cumulative assessment, the potential future receptor locations were characterized based on planned developments, including residential communities, businesses, and sensitive receptors such as schools.

Receptors that were determined to be within locations not considered ambient air, such as rights-of-way and within sources, were included in the AERMOD dispersion modeling but excluded from the HRA.

[4] Although the groundskeeper residence is located within the project boundary and would be removed prior to completion of the proposed project, it is included in this HRA for informational purposes. Results at the groundskeeper residence location are presented in the Appendix.

The receptor grid and sensitive receptor locations are illustrated on Figure 2. Receptors and source locations are expressed in the Universal Transverse Mercator (UTM) North American Datum (NAD) 1983, Zone 10 coordinate system (meters).

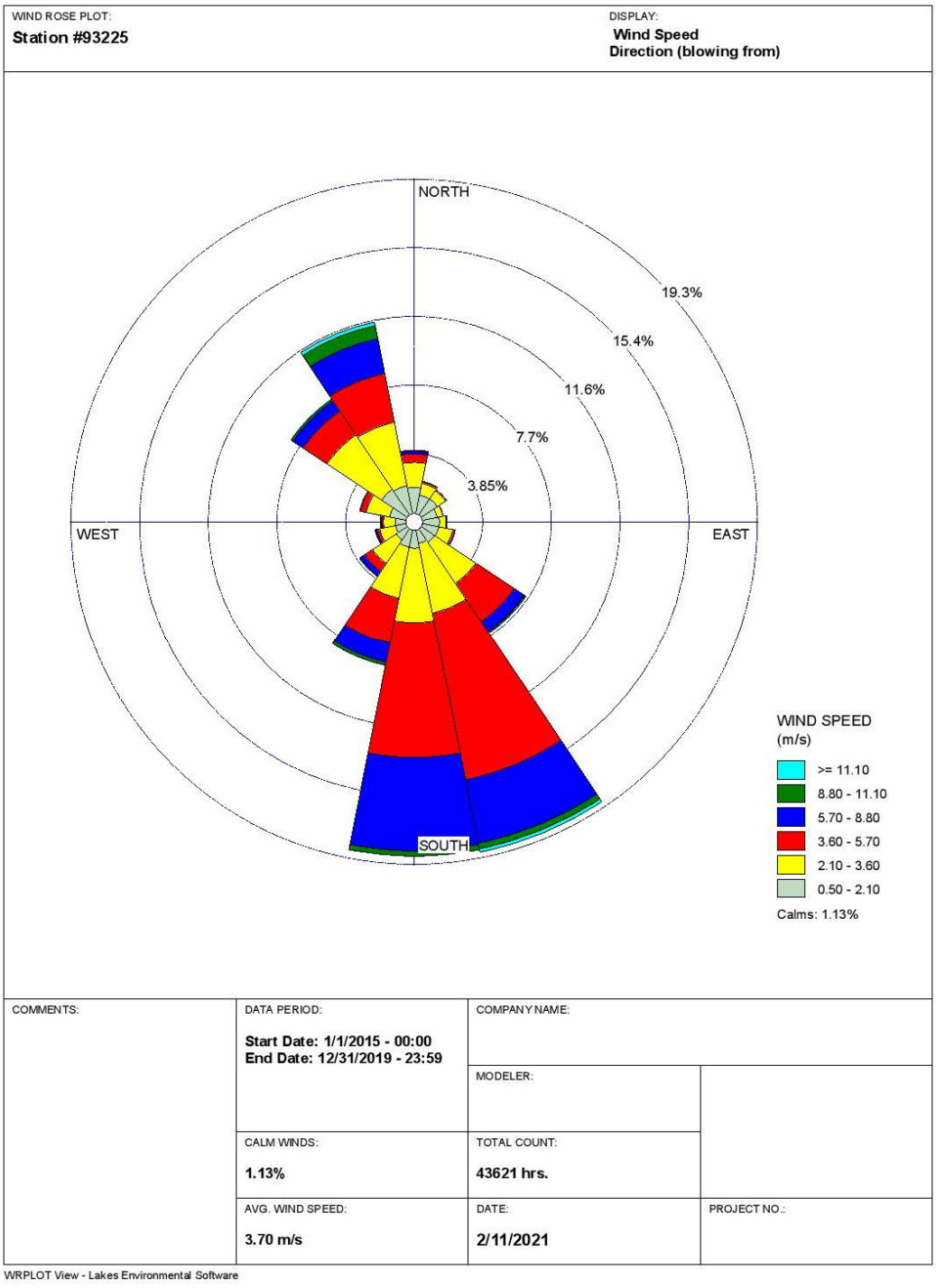

Figure 1. Meteorological Data Wind Rose

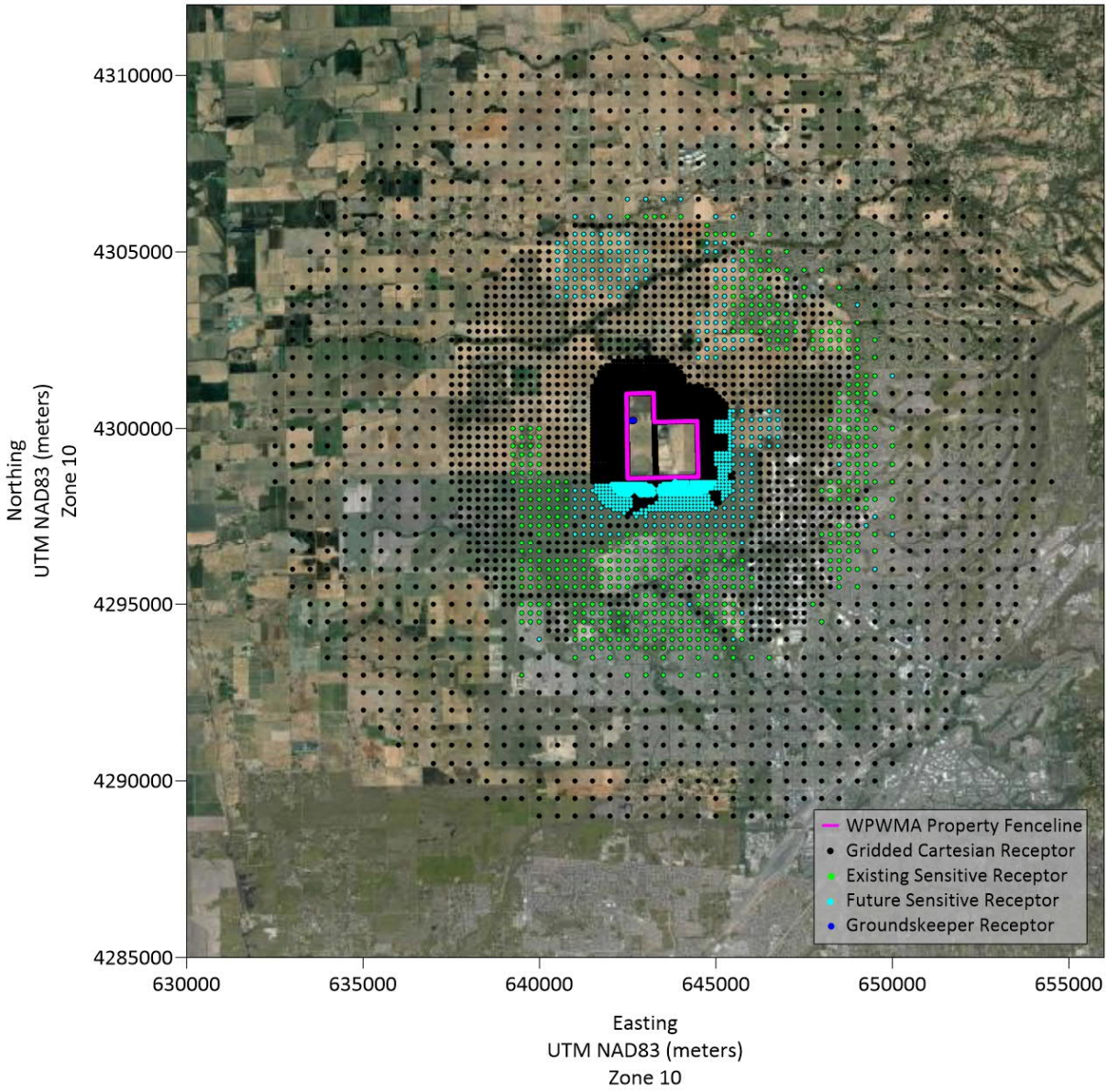

Figure 2. Receptor Grid

4.3 Fenceline

The ambient air boundary is defined by the fenceline surrounding the WPWMA-owned property, within which public access is limited. Figure 3 represents the location of the proposed project and the associated fenceline.

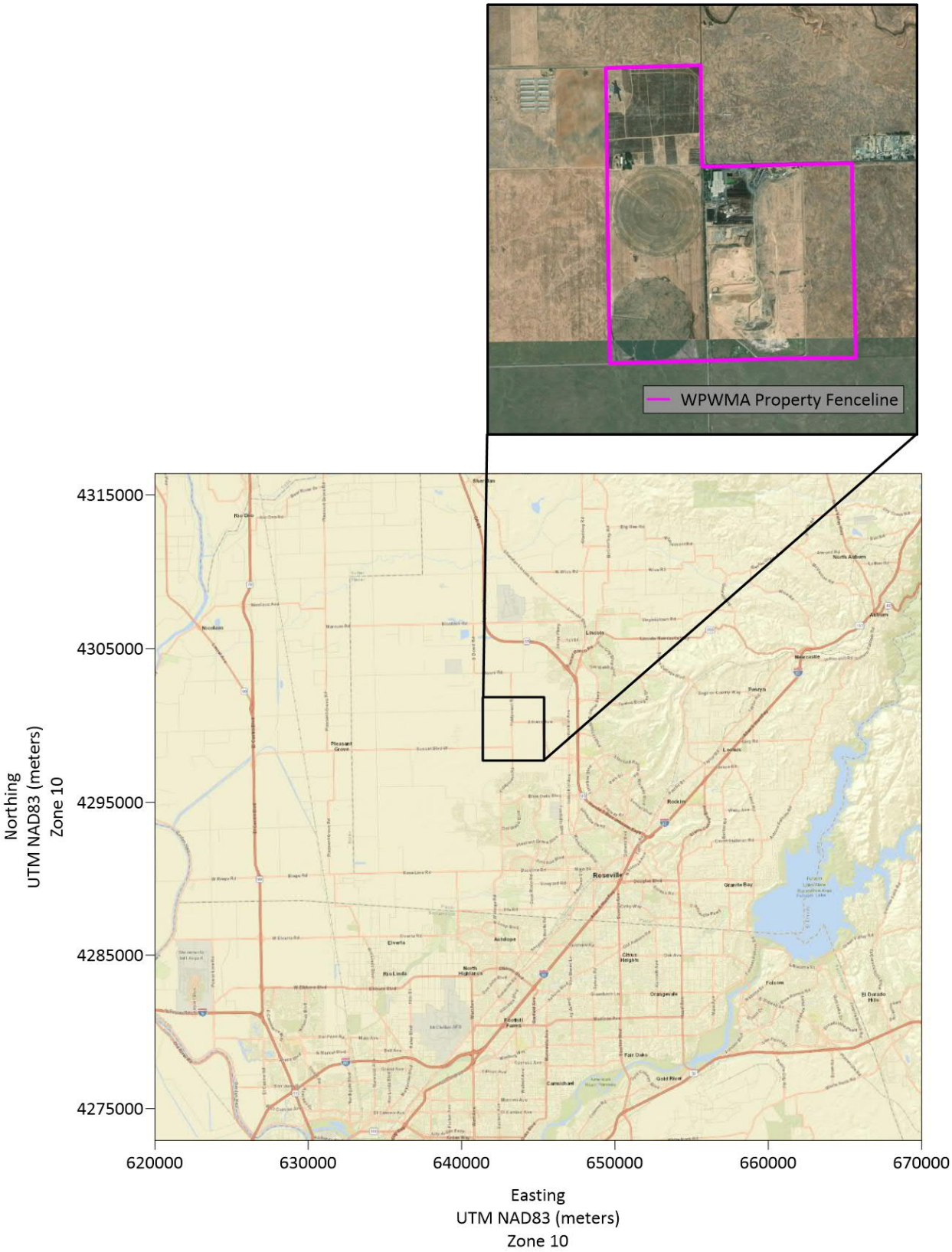

Figure 3. WPWMA Project Location and Fenceline

4.4 Building Downwash

Building influences on stationary stacks were calculated by incorporating the updated EPA Building Profile Input Program for use with the Plume-Rise Model-Enhancement algorithm. A list of building inputs used in the modeling is included in Appendix A.

4.5 Source Characterization

Consistent with HRA guidance (OEHHA 2015), all sources were modeled with a 1 g/s emission rate. The following subsections describe how the sources identified for the proposed project were characterized in the AERMOD dispersion model. This analysis modeled 1 g/s for all sources in a single source group and applied a factor of 1/(Number of sources in source group) to the emissions input into the HARP2 HRA-modeling.

Figures depicting the locations and layouts of the modeled sources are included in Appendix B.

4.5.1 Landfill Modules

Landfill operations at the facility were split into specific landfill modules that would be operated one at a time. Each landfill module in each of the proposed project Plan Concepts was modeled as its own area poly (AREAPOLY) source in AERMOD. Source parameters for these sources are included in Table 2.

The proposed facility landfill modules for each plan concept were included in the dispersion modeling analysis. However, not all modules would be operating during the scoped time period for this analysis. Only modules with waste operations through 2050 were included in the HRA.

Emissions from the landfill modules included fugitive LFG emissions and operational off-road equipment emissions. Fugitive LFG emissions were estimated as the maximum net annual increase in emissions, assumed to occur for the duration of the HRA. Operational off-road equipment emissions would be scattered across the various operational landfill modules during the project. As a result, these equipment emissions were apportioned to each of the landfill modules based upon the area of each module and were assumed to occur for the duration of this HRA.

Table 2. Landfill Module Source Parameters

Source ID	AERMOD Source Type	Base Elevation (m)[a]	Release Height (m)	Initial Vertical Dimension (m)
Varies	AREAPOLY	Varies	0	2.37

[a] Base elevations were obtained from AERMAP and vary by source

4.5.2 Composting Operations

Composting operations for each proposed project plan concept included emissions from mobile sources, such as diesel off-road equipment, and fugitive emissions from compost curing piles, compost stockpiles, and the aerated static pile composting process. Each of the stockpiles, curing piles, and aerated static piles were modeled as area sources (AREA).

Emissions from diesel equipment used to maintain the composting piles were modeled as a grid of point sources (POINT) with a horizontal stack release spaced approximately 25 m apart over the entire composting area. The horizontal release-type option in AERMOD conservatively negates mechanical

plume rise. This conservative approach was used because not all construction equipment would have vertically oriented exhaust stacks.

Source parameters for these composting operation sources are included in Tables 3 and 4.

Table 3. Compost Area Source Parameters

Source ID	AERMOD Source Type	Base Elevation (m)[a]	Release Height (m)	Initial Vertical Dimension (m)
Curing Piles – Varies	AREA	Varies	0	2.84
Aerated Static Piles – Varies	AREA	Varies	0	2.84
Stockpiles – Varies	AREA	Varies	0	2.84

[a] Base elevations were obtained from AERMAP and vary by source.

Table 4. Compost Area Equipment Source Parameters

Source ID	AERMOD Source Type	Base Elevation (m)[a]	Stack Height (m)	Temperature (K)	Exhaust Velocity (m/s)	Stack Diameter (m)
Varies	POINT-Horizontal	Varies	4.6	533	18	0.127

[a] Base elevations were obtained from AERMAP and vary by source.

Note:

K = degree(s) Kelvin

m/s = meter(s) per second

4.5.3 Construction and Demolition Materials Processing Operations

Construction and demolition materials processing operations included emissions from mobile sources, such as diesel off-road equipment, and were assumed to occur during the duration of this HRA. Equipment emissions were evenly distributed and modeled as POINT sources with a horizontal stack release spaced approximately 25 m apart over the entire composting area. The horizontal release-type option in AERMOD conservatively negates mechanical plume rise. This conservative approach was used because it was unknown whether all construction equipment would have vertically oriented exhaust stacks. Source parameters for these sources are included in Table 5.

Table 5. Construction and Demolition Materials Processing Equipment Source Parameters

Source ID	AERMOD Source Type	Base Elevation (m)[a]	Stack Height (m)	Temperature (K)	Exhaust Velocity (m/s)	Stack Diameter (m)
Varies	POINT-Horizontal	Varies	4.6	533	18	0.127

[a] Base elevations were obtained from AERMAP and vary by source.

4.5.4 Onsite Roads

Onsite road emissions would occur from worker commute vehicles, utility vehicles, waste haul trucks, and public drop-off operations, which were assumed to occur during the duration of this HRA. All onsite traffic, vehicle routes, and associated emissions were modeled as line sources (LINE) with source parameters developed based on the EPA's *Haul Road Workgroup Final Report Submission to EPA-OAQPS* (EPA 2012). Emissions were calculated for input into AERMOD, based on the length of the specific route. The total emissions of the specific route were divided by the total length of the route and multiplied by the specific length of each line source for an even distribution. Source parameters for these sources are included in Table 6.

Plan Concept 2 includes new road development in the year 2048. Because this new road arrangement would account for only 2 years of the 30-year analysis, the new routes were not considered as part of this HRA.

Table 6. Onsite Road Source Parameters

Source ID	AERMOD Source Type	Base Elevation (m)[a]	Release Height (m)	Line Width (m)	Initial Vertical Dimension (m)
Varies	LINE	Varies	2.55	15	2.37

[a] Base elevations were obtained from AERMAP and vary by source.

4.5.5 Offsite Roads

Offsite road emissions would occur from worker commute vehicles, offsite utility vehicles, waste haul trucks, and public drop-off operations, which were assumed to occur during the duration of this HRA. All offsite traffic routes and associated emissions were modeled as LINE with source parameters developed based on the EPA's *Haul Road Workgroup Final Report Submission to EPA-OAQPS* (EPA 2012). Emissions were calculated for input into AERMOD, based on the length of specific route. The total emissions of the specific route were divided by the total length of the route and multiplied by the specific length of each line source for an even distribution. Source parameters for these sources are included in Table 7. The offsite road sources are consistent between Plan Concepts 1 and 2.

Table 7. Offsite Road Source Parameters

Source ID	AERMOD Source Type	Base Elevation (m)a	Release Height (m)	Line Width (m)	Initial Vertical Dimension (m)
Varies	LINE	Varies	2.55	15	2.37

[a] Base elevations were obtained from AERMAP and vary by source.

4.5.6 Flares

Emissions from the main facility flare and secondary flare were modeled as POINT sources and were assumed to occur during the duration of this HRA. Source parameters for these sources are included in Table 8. The flare sources are consistent between Plan Concepts 1 and 2.

Table 8. Flare Source Parameters

Source ID	AERMOD Source Type	Base Elevation (m)[a]	Stack Height (m)	Temperature (K)	Exhaust Velocity (m/s)	Stack Diameter (m)
E_MF	POINT	37.28	14.1	1,088	0.56	3.86
E_SF	POINT	37.28	14.1	1,075	2.74	1.83

[a] Base elevations were graded to the elevation of the LFGTE plant building.

4.5.7 Landfill Gas-to-Energy Plant

Emissions from the generator engines associated with the onsite LFGTE plant were modeled as POINT sources and were assumed to occur during the duration of this HRA. Source parameters for these sources are included in Table 9. The LFGTE plant sources are consistent between Plan Concepts 1 and 2.

Table 9. Landfill Gas-to-Energy Plant Engine Source Parameters

Source ID	AERMOD Source Type	Base Elevation (m)[a]	Stack Height (m)	Temperature (K)	Exhaust Velocity (m/s)	Stack Diameter (m)
E_LFG_E#[b]	POINT	37.28	7.62	764	24.23	0.3

[a] Base elevations were graded to the elevation of the LFGTE plant building.

[b] # corresponds to the number of sources in AEMROD.

4.5.8 Generators

Emissions from new onsite emergency generators were modeled as POINT sources and were assumed to occur during the duration of this HRA. Source parameters for these sources are included in Table 10. The generator sources are consistent between Plan Concepts 1 and 2.

Table 10. Gasoline Emergency Generator Source Parameters

Source ID	AERMOD Source Type	Base Elevation (m)[a]	Stack Height (m)	Temperature (K)	Exhaust Velocity (m/s)	Stack Diameter (m)
SH_GEN##[b]	POINT	36.0	0.5	500	20	0.025

[a] Base elevations were obtained from AERMAP and vary by source.

[b] # corresponds to the number of sources in AEMROD.

4.5.9 Materials Recovery Facility

Emissions from MRF operations included diesel off-road equipment and would occur within the MRF building, a large building with openings along the outer walls and roof vents. These emissions were assumed to occur during the duration of this HRA. These emissions were characterized as grid of volume (VOLUME) sources with 25 m spacing across the MRF building footprint, with emissions evenly distributed between all volume sources. Source parameters for these sources are included in Table 11. The MRF sources are consistent between Plan Concepts 1 and 2.

Table 11. Materials Recovery Facility Source Parameters

Source ID	AERMOD Source Type	Base Elevation (m)[a]	Release Height (m)	Initial Horizontal Dimension (m)	Initial Vertical Dimension (m)
MRF##[b]	VOLUME	Varies	6.1	5.7	2.83

[a] Base elevations were obtained from AERMAP and vary by source.

[b] # corresponds to the number of sources in AEMROD.

4.5.10 Facility Construction

Construction would occur throughout operation of the proposed project, as new or existing facilities that are part of the proposed project would be constructed, upgraded, expanded, or replaced. Details regarding calculation of annual construction emissions are included in Section 5.1.

For modeling purposes, annual emissions were apportioned across the major construction sources listed as follows, based on source area footprint, and were conservatively assumed to occur during each of the 30 years of this HRA.

The locations of the following facilities were modeled as having construction emissions during the 30-year proposed project analysis period:

- Stormwater Ponds – Emissions were modeled over the footprint of each planned stormwater pond area, using a methodology consistent with the approach used for construction and demolition materials processing operations in Table 5.
- Public Drop-Off Area – Emissions were modeled over the footprint of the public drop-off area for each plan concept, using a methodology consistent with the approach used for construction and demolition materials processing operations in Table 5.
- Compost Area – Emissions were included with the operational compost area point sources over the footprint of the compost area for each plan concept. Refer to Table 4 for a summary of the associated source parameters.
- Construction and Demolition Materials Processing Area – Emissions were modeled over the footprint of the construction and demolition materials processing area for each plan concept, a using methodology consistent with the approach used for construction and demolition materials processing operations in Table 5.
- Landfill Modules – Emissions for construction of each new landfill module were modeled as part of each landfill module operational source. Refer to Table 2 for a summary of the associated source parameters.

4.5.11 Waste Relocation

Waste relocation operations would occur in landfill modules 1, 10, and 11. For Plan Concept 2, these construction emissions are included in the sitewide construction totals and are therefore captured in existing modeled sources in the same area.

Waste relocation would use existing landfill operational equipment to move waste slowly over time to new, lined landfill modules for Plan Concept 1. This process would not result in any additional emissions greater than the landfill module operational equipment emissions already accounted for Plan Concept 1. Therefore, these landfill modules were not included in this HRA for Plan Concept 1.

5. Health Risk Assessment Methodology

5.1 Emission Inventory

TAC emissions for the incremental increase in activity associated with operation of the proposed project were calculated for the project buildout year of 2050, when maximum operational capacity is expected. The incremental increase is based on overall tonnage increase for each facility with the proposed project and is the same for both Plan Concepts. A peaking factor of 1.28 (obtained by dividing the peak 2018 weekday tonnage by the average 2018 weekday tonnage) was applied to represent a hypothetical future maximum day for purposes of maximum short-term emissions. For purposes of annual emission estimates in the modeling analysis, annual average emissions were used without the use of the short-term peaking factor. For operational sources for which no hourly emission data were available, maximum daily emissions assumed a 14-hour operational day.

Construction would occur throughout operation of the proposed project, as new or existing facilities that are part of the proposed project would be constructed, upgraded, expanded, or replaced. To determine the maximum annual construction emissions from diesel off-road equipment, emissions were calculated for hypothetical peak years for each plan concept. These years generally included construction of major project elements or multiple construction projects estimated to be completed in the same year. Emissions from construction projects completed in all other, non-peak years would be expected to be lower than emissions in the hypothetical peak years.

The annual emission rate values for construction used in the modeling were derived by averaging the annual emission rate values for the individual hypothetical peak years for each plan concept. These annual emissions were conservatively assumed to occur during each of the 30 years of this HRA to account for varying levels of construction over the analysis period. For short-term emissions, the maximum daily emissions calculated assume all construction projects within a given year could overlap and therefore reflect the sum of the maximum daily emissions for each individual construction project divided by an 8-hour workday.

The TAC emission rates used in the HRA analysis were modeled assuming concurrent operational and construction activity. The emissions profiles for each of the modeled sources are outlined as follows.

5.1.1 Landfill Modules

LFG generation rate estimates were based on the EPA Landfill Gas Emissions Model (LandGEM), version 3.03, 2020. Inputs for the model included in-place and projected refuse amounts, period of operation (years), ultimate methane generation potential ("L_0" value), and the refuse decay rate coefficient ("k" value). Individual TAC emission rates were calculated by multiplying the fugitive LFG emission rate by the concentrations of each TAC in the LFG. Average concentrations of compounds found in LFG are based on the Waste Industry Air Coalition (WIAC) *Comparison of Recent Landfill Gas Analyses with Historic AP-42 Values* (WIAC 2001).

LFG throughput for the flares was estimated based on operating records and the remaining plant capacity. Similar to fugitive LFG, individual TAC emissions rates were calculated by multiplying the volume of flared gas by the concentrations defined by WIAC. The emissions estimates for the flares also incorporated a destruction efficiency, which reduced volatile TAC emissions by 98 to 99.7 percent.

Diesel off-road equipment used to construct landfill modules and operate the landfill would emit diesel particulate matter (DPM). DPM emissions were estimated by using emission factors taken from Appendix D of the CalEEMod User's Guide (CAPCOA 2017). Emission factors were defined by equipment type, year,

and size rating. Particulate matter (PM_{10}) emissions in diesel-fueled equipment exhaust are considered equivalent to DPM.

5.1.2 Composting Operations

Composting emissions included TACs (ammonia and volatile TACs) resulting from active composting, stockpiling, and curing. The emission factor for ammonia was defined by the California Air Resources Board (ARB) *Emissions Inventory Methodology for Composting Facilities* (ARB 2015a). Emission factors for other volatile TACs were obtained from the *Atmospheric Environment* journal study done by UC Davis and CalRecycle: "Volatile Organic Compound Emissions from Green Waste Composting: Characterization and Ozone Formation" (Kumar et al. 2011).

Diesel equipment used to maintain the composting piles would emit DPM. DPM emissions were estimated by using emission factors taken from Appendix D of the CalEEMod User's Guide (CAPCOA 2017). Emission factors were defined by equipment type, year, and size rating. PM_{10} emissions in diesel-fueled equipment exhaust are considered equivalent to DPM.

5.1.3 On-Road Mobile Source Emissions (Onsite Road and Offsite Roads)

On-road vehicle exhaust emissions were estimated by using average emission factors for the PCAPCD obtained from ARB's emission inventory tool "EMission FACtor," or EMFAC2017 (ARB 2017). Emission factors were defined in terms of pounds per vehicle mile traveled. TAC emissions from mobile sources were limited to DPM. Traffic-flow and vehicle quantities were defined for vehicles entering and exiting specific areas of the proposed project site. On-road vehicle counts for the project buildout year were based on actual vehicles recorded in the 2018 baseline year and an assumed annual increase to account for waste growth and facility usage over time. The average waste haul truck trip distance was based on trip origin data collected at the WPWMA scale houses for the 2018 baseline year and adjusted to account for waste growth over time based on population forecast data provided in general plans for the surrounding areas. Vehicle traffic related to transport of the solid waste associated with the proposed project would include both commercial haulers and self-haul vehicles. Commercial haulers would bring collected waste to the site in medium to heavy-duty haul trucks. Self-haul traffic would include small businesses (that is, landscaper and contractors) and the public. Once onsite, dedicated operational on-road vehicles and off-road equipment would move materials between the various waste recovery and disposal facilities.

5.1.4 Landfill-Gas-to-Energy Plant

The LFGTE plant produces electricity by using LFG as fuel. The facility has six Caterpillar 3516 Electricity Generators, four of which were in use under the 2018 baseline operating scenario. Operation of the remaining two generators would occur as part of the proposed project. Individual TAC emissions were calculated by multiplying the LFG combustion rates in each engine by the concentrations defined by WIAC.

5.1.5 Emergency Generators

Three new gasoline-fired generators would be used for emergency power at the new scale house that would be built as part of each plan concept. Individual TAC emissions included the organic and inorganic compound TAC emissions, estimated conservatively by using emission factors from AP-42, Section 3.3, Gasoline Industrial Engines.

5.1.6 Materials Recovery Facility

Diesel off-road equipment used at the MRF would emit DPM. DPM emissions were estimated by using emission factors taken from Appendix D of the CalEEMod User's Guide (CAPCOA 2017). Emission factors

were defined by equipment type, year, and size rating. PM_{10} emissions in diesel-fueled equipment exhaust are considered equivalent to DPM.

5.1.7 Construction Operations

Diesel off-road equipment used for facility construction projects would emit DPM. DPM emissions were estimated by using emission factors taken from Appendix D of the CalEEMod User's Guide (CAPCOA 2017). Emission factors were defined by equipment type, year, and size rating. PM_{10} emissions in diesel-fueled equipment exhaust are considered equivalent to DPM.

5.2 Model Selection

The most recent version of HARP2 (Version 21081)[5], with revised unit risk and cancer potency values updated in October 2020, was used for this analysis. The updated sensitivity factors were applied in accordance with the *Risk Management Guidance for Stationary Sources of Air Toxics* (ARB 2015b).

To account for particle toxics deposition on vegetation and the soil, the deposition rate modeled in HARP2 was conservatively set to 0.05 m/s for uncontrolled sources for preliminary analysis.

6. Risk Evaluation

Risk characterization for toxics emitted by the facility was conducted by using procedures specified in the OEHHA Guidance (OEHHA 2015).

The risk assessment evaluated both carcinogenic (cancer) and noncarcinogenic (noncancer) health risks, as described in the following subsections, for two exposure scenarios: existing project scenario and cumulative scenario. The receptor grids described in Section 4.2 include one run for the existing receptor grid and one for the cumulative receptor grid inclusive of potential future development plans. Receptors that were determined to be within locations not considered ambient air such as rights-of-way and within offsite sources were included in the modeling but not included in the HRA.

Carcinogenic Risk. Potential cancer risks for residential and sensitive receptors were evaluated, using a scenario assuming a 30-year continuous exposure duration starting in the third trimester. Potential cancer risks for worker and commercial or industrial receptors were evaluated by using a scenario assuming a 25--year workplace exposure duration (8 hours per day, 5 days per week, starting at age 16), as recommended in the OEHHA Guidance (OEHHA 2015). Based on the Risk Management Guidance for Stationary Sources of Air Toxics, the Derived (Adjusted) Method in HARP2 was used for the cancer risk evaluation, which uses the 95th percentile breathing rate from the third trimester to 2 years and the 80th percentile inhalation rate from 2 years to 70 years as exposure assumptions for residential cancer risk assessments (ARB 2015b). Additionally, the fraction of time spent at home option was applied for age bins greater than or equal to 16 years.

Cancer risks were calculated based on the annual project-related TAC emission rates from the emission inventory, ground-level concentrations obtained from the dispersion modeling analysis, and values for inhalation cancer potency, oral slope factor, frequency and duration of exposure at the receptor, age-specific sensitivity factors, and breathing rates of the exposed persons from the HARP2 model. Cancer risk results are expressed as the incremental increase in lifetime cancer risk greater than baseline levels of risk, typically as a predicted number (of persons) per one million individuals.

[5] https://ww2.arb.ca.gov/resources/documents/harp-air-dispersion-modeling-and-risk-tool

Noncarcinogenic Chronic Exposure. Chronic toxicity is defined as adverse health effects from prolonged chemical exposure caused by chemicals accumulating in the body. To assess long-term chronic noncancer exposures, modeled TAC ground-level concentrations were compared with chemical-specific reference exposure levels (RELs) developed by OEHHA to obtain a chronic hazard index. The REL is a concentration in ambient air at or below which no adverse health effects are anticipated. Noncancer chronic health risks were calculated as a hazard quotient, which is the modeled exposure concentration of each contaminant divided by its REL. Hazard quotients for pollutants affecting the same target organ were summed with the resulting totals expressed as hazard indices (HI) for each organ system.

Noncarcinogenic Acute Exposure. Acute toxicity is defined as adverse health effects caused by a brief chemical exposure of no more than 24 hours. To assess acute noncancer exposures, predicted 1-hour average TAC concentrations were compared with chemical-specific acute RELs to obtain an acute hazard index. Similar to assessing chronic noncancer health risks, acute health risks were calculated as a hazard quotient, which is the modeled exposure concentration of each contaminant divided by its REL. Hazard quotients for pollutants affecting the same target organ were summed with the resulting totals expressed as HI for each organ system.

7. Exposure Pathways

For this risk analysis, exposure pathways listed in Table 12 were included for each risk scenario.

Table 12. Exposure Pathways

Risk Analysis	Model Exposure Pathways	Intake Rate Percentile
Acute	Inhalation	N/A
Noncancer Chronic	Inhalation Soil Ingestion Dermal Absorption Mother's Milk Homegrown Produce Beef/Dairy (Farming) Pig/Chicken/Egg (Farming)	N/A
Cancer	Inhalation Soil Ingestion Dermal Absorption Mother's Milk Homegrown Produce Beef/Dairy (Farming) Pig/Chicken/Egg (Farming)	ARB Risk Management Policy, Using the Derived Method

Note:

N/A = not applicable

8. Thresholds

The risk evaluation methodology described previously was used to predict potential excess lifetime cancer risks, chronic health hazard impacts, and acute health hazard impacts. Using the receptor locations described in Section 4.2, cancer, chronic, and acute health risks were estimated for the locations of the maximally exposed individual at a residential location (MEIR), the maximally exposed individual at a workplace location (MEIW), and at sensitive receptors within 10 kilometers of the proposed project site.

The modeled point of maximum impacts (PMI) health risk values were reported as well. For the overall project and cumulative impact analyses, the risk results predicted at the MEIR, MEIW, and sensitive receptor locations were compared with the following thresholds from the PCAPCD's recommended thresholds[6] of significance (PCAPCD 2017):

- Incremental increase in cancer risk of 10 in one million individuals
- Chronic hazard index of 1.0
- Acute hazard index of 1.0

9. Results

The results of the HRA for both the project-level analysis (existing receptor grid) and cumulative analysis (receptor grid including potential future development) are summarized in Table 13 through Table 18. Figures illustrating the contour plots of the 10 and 1 in a million thresholds for cancer risk and identified impact points in the Tables are included in Appendix C.

Existing receptor impacts for carcinogenic and noncarcinogenic health risk would be below the significance thresholds for both Plan Concepts. Cumulative receptor impacts would be above the significance threshold for cancer risk at future development receptors because of DPM emissions from plan elements in the south-southeastern portions of the facility and DPM emissions from haul truck traffic on roads near the landfill for both Plan Concepts.

Table 13. Plan Concept 1 Health Risk Assessment Cancer Risk Summary

Receptor Type	Receptor Location		Risk	PCAPCD Significance Threshold
	X Coordinate (m)	Y Coordinate (m)	(per one million)	(per one million)
MEIR[a]	645,750	4,298,000	56.9	10
MEIW[b]	645,300	4,300,100	6.7	10
Existing Sensitive Receptor[c]	645,250	4,297,000	4.7	10
Cumulative Sensitive Receptor[c]	645,750	4,298,000	56.9	10

Receptor location coordinates are respective to UTM NAD83 Zone 10

Notes:

[a] The MEIR represents the location of the maximum observed risk at residential receptors as defined by land-use type for the existing analysis or cumulative analysis, or as observed in aerial imagery.

[b] The MEIW is represented as the location of the maximum observed risk at all modeled receptors.

[c] Existing and cumulative sensitive receptor locations within modeled sources were removed from this HRA.

[6] https://www.placer.ca.gov/DocumentCenter/View/2044/Appendix-G-Preparing-a-Health-Risk-Assessment-for-Land-Use-Projects-PDF

Table 14. Plan Concept 2 Health Risk Assessment Cancer Risk Summary

Receptor Type	Receptor Location		Risk	PCAPCD Significance Threshold
	X Coordinate (m)	Y Coordinate (m)	(per one million)	(per one million)
MEIR[a]	645,750	4,298,000	57.1	10
MEIW[b]	645,300	4,300,100	6.8	10
Existing Sensitive Receptor[c]	645,250	4,297,000	4.7	10
Cumulative Sensitive Receptor[c]	645,750	4,298,000	57.1	10

Receptor location coordinates are respective to UTM NAD83 Zone 10

Notes:

[a] The MEIR represents the location of the maximum observed risk at residential receptors as defined by land-use type for the existing analysis or cumulative analysis, or as observed in aerial imagery.

[b] The MEIW is represented as the location of the maximum observed risk at all modeled receptors.

[c] Existing and cumulative sensitive receptor locations within modeled sources were removed from this HRA.

Table 15. Plan Concept 1 Health Risk Assessment Noncancer Chronic Risk Summary

Receptor Type	Receptor Location		Risk	PCAPCD Significance Threshold
	X Coordinate (m)	Y Coordinate (m)	(HI)	(HI)
MEIR[a]	645,300	4,300,100	0.023	1
PMI	643,912	4,300,199	0.203	1
Existing Sensitive Receptor	645,250	4,297,000	0.003	1
Cumulative Sensitive Receptor	645,300	4,300,100	0.023	1

Receptor location coordinates are respective to UTM NAD83 Zone 10

Notes:

[a] The MEIR represents the location of the maximum observed risk at residential receptors as defined by land-use type for the existing analysis or cumulative analysis, or as observed in aerial imagery.

HI = health index, dimensionless

Table 16. Plan Concept 2 Health Risk Assessment Noncancer Chronic Risk Summary

Receptor Type	Receptor Location		Risk	PCAPCD Significance Threshold
	X Coordinate (m)	Y Coordinate (m)	(HI)	(HI)
MEIR[a]	645,300	4,300,100	0.023	1
PMI	643,912	4,300,199	0.218	1

Table 16. Plan Concept 2 Health Risk Assessment Noncancer Chronic Risk Summary

Receptor Type	Receptor Location		Risk	PCAPCD Significance Threshold
	X Coordinate (m)	Y Coordinate (m)	(HI)	(HI)
Existing Sensitive Receptor	643,250	4,296,500	0.003	1
Cumulative Sensitive Receptor	645,300	4,300,100	0.023	1

Receptor location coordinates are respective to UTM NAD83 Zone 10

Note:

[a] The MEIR represents the location of the maximum observed risk at residential receptors as defined by land-use type for the existing analysis or cumulative analysis, or as observed in aerial imagery.

Table 17. Plan Concept 1 Health Risk Assessment Noncancer Acute Risk Summary

Receptor Type	Receptor Location		Risk	PCAPCD Significance Threshold
	X Coordinate (m)	Y Coordinate (m)	(HI)	(HI)
PMI[a]	642,475	4,299,857	0.71	1
MEIR[b]	642,350	4,298,450	0.21	1
Existing Sensitive Receptor	640,000	4,300,000	0.12	1
Cumulative Sensitive Receptor	642,350	4,298,450	0.21	1

Receptor location coordinates are respective to UTM NAD83 Zone 10

Notes:

[a] The PMI is included as part of the acute risk analysis since a short-term exposure duration is possible at any modeled location.

[b] The MEIR represents the location of the maximum observed risk at residential receptors as defined by land-use type for the existing analysis or cumulative analysis, or as observed in aerial imagery.

Table 18. Plan Concept 2 Health Risk Assessment Noncancer Acute Risk Summary

Receptor Type	Receptor Location		Risk	PCAPCD Significance Threshold
	X Coordinate (m)	Y Coordinate (m)	(HI)	(HI)
PMI[a]	643,270	4,299,781	0.69	1
MEIR[b]	645,000	4,299,900	0.20	1
Existing Sensitive Receptor	640,750	4,298,500	0.10	1

Table 18. Plan Concept 2 Health Risk Assessment Noncancer Acute Risk Summary

Receptor Type	Receptor Location		Risk	PCAPCD Significance Threshold
	X Coordinate (m)	Y Coordinate (m)	(HI)	(HI)
Cumulative Sensitive Receptor	645,000	4,299,900	0.20	1

Receptor location coordinates are respective to UTM NAD83 Zone 10

Notes:

[a] The PMI is included as part of the acute risk analysis since a short-term exposure duration is possible at any modeled location.

[b] The MEIR represents the location of the maximum observed risk at residential receptors as defined by land-use type for the existing analysis or cumulative analysis, or as observed in aerial imagery.

10. References

California Air Pollution Control Officers Association (CAPCOA). 2017. *California Emissions Estimator Model (CalEEMod) User's Guide*. November.

California Air Resources Board (ARB). 2015a. *California ARB Emissions Inventory Methodology for Composting Facilities*. March.

California Air Resources Board (ARB). 2015b. *Risk Management Guidance for Stationary Sources of Air Toxics*, California Air Pollution Control Officers Association. July.

California Air Resources Board (ARB). 2017. *EMFAC2017 Web Database.* https://arb.ca.gov/emfac/2017/.

Kumar, Anuj, Christopher Alaimo, Robert Horowitz, Frank Mitloehner, Michael Kleeman, and Peter Green. 2011. "Volatile organic compound emissions from green waste composting: Characterization and ozone formation." *Atmospheric Environment.* – Vol. 45. No. 10. pp. 1841–1848.

Office of Environmental Health Hazard Assessment (OEHHA). 2015. *Guidance Manual for Preparation of Health Risk Assessments*, Air, Community, and Environmental Research Branch. February.

Placer County Air Pollution Control District (PCAPCD). 2017. CEQA Air Quality Handbook.

U.S. Environmental Protection Agency (EPA). 2017. *Appendix W of 40 CFR Part 51—Guideline On Air Quality Models (Revised)*. Office of Air Quality Planning and Standards, Research Triangle Park, North Carolina. January.

U.S. Environmental Protection Agency (EPA). 2012. *U.S. EPA Haul Road Workgroup Final Report Submission to EPA-OAQPS*. March.

U.S. Environmental Protection Agency (EPA). 2000. *Meteorological Monitoring Guidance for Regulatory Modeling Applications*. Office of Air Quality Planning and Standards, Research Triangle Park, North Carolina. February.

Waste Industry Air Coalition (WIAC). 2001. *Waste Industry Air Coalition Comparison of Recent Landfill Gas Analyses with Historic AP-42 Values*. January.

Appendix A
Building Downwash Inputs

Appendix A. Building Downwash Inputs

Table A1 – Building Summary

Building ID	Building Description	Base Elevation (m)[a]	Height (ft)
LFG_EP	Landfill Gas-To-Energy Plant	37.28	20

[a] Base were obtained from AERMAP.

Table A2. Building Coordinates

Building ID	X Coordinate #1	Y Coordinate #1	X Coordinate #1	Y Coordinate #1	X Coordinate #1	Y Coordinate #1	X Coordinate #1	Y Coordinate #1
LFG_EP	643,904	4,300,118	643,932	4,300,143	643,943	4,300,131	643,914	4,300,106

Appendix B
Source Layout

Appendix B. Source Layout

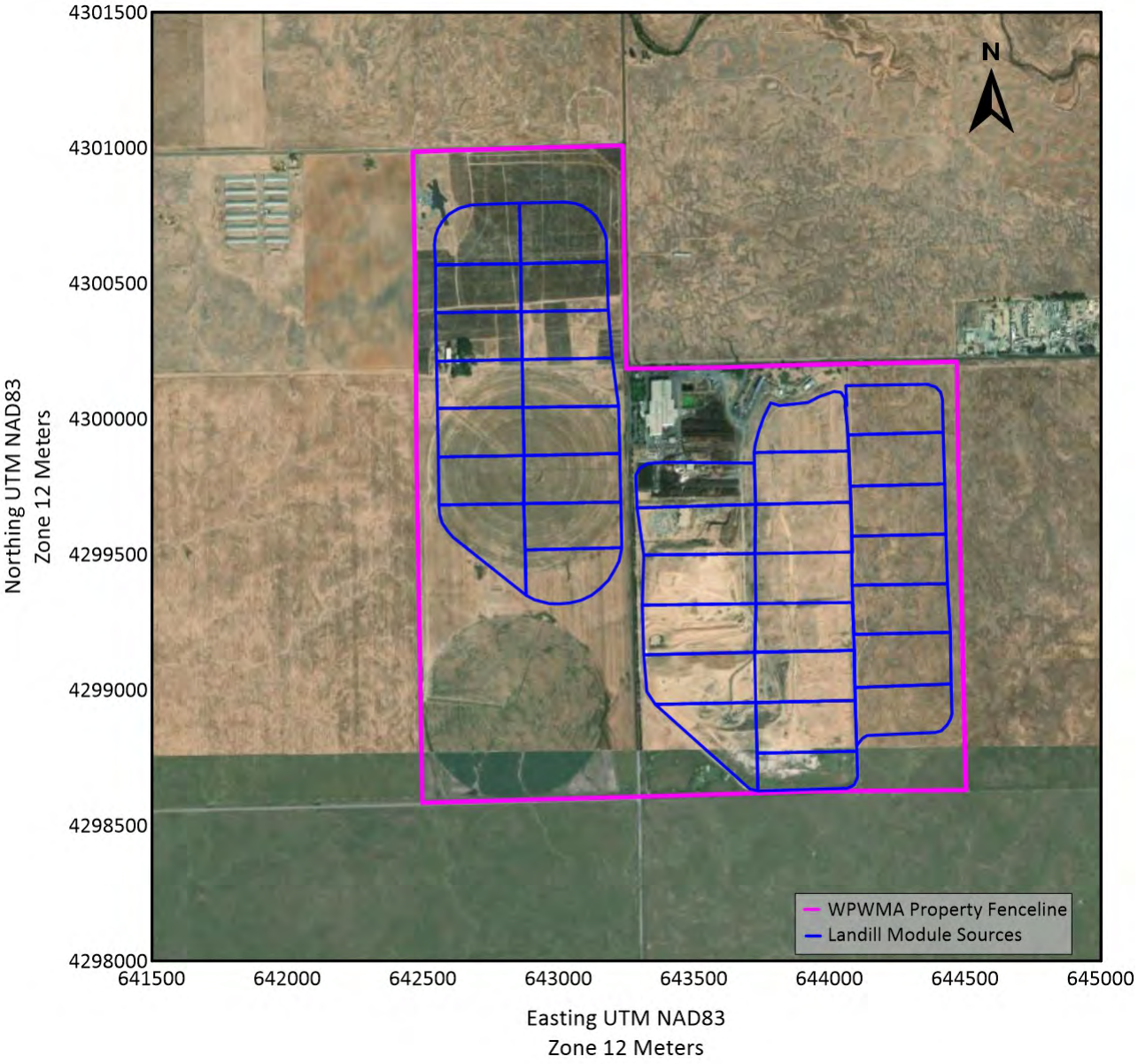

Figure B-1. Landfill Module Source Layout

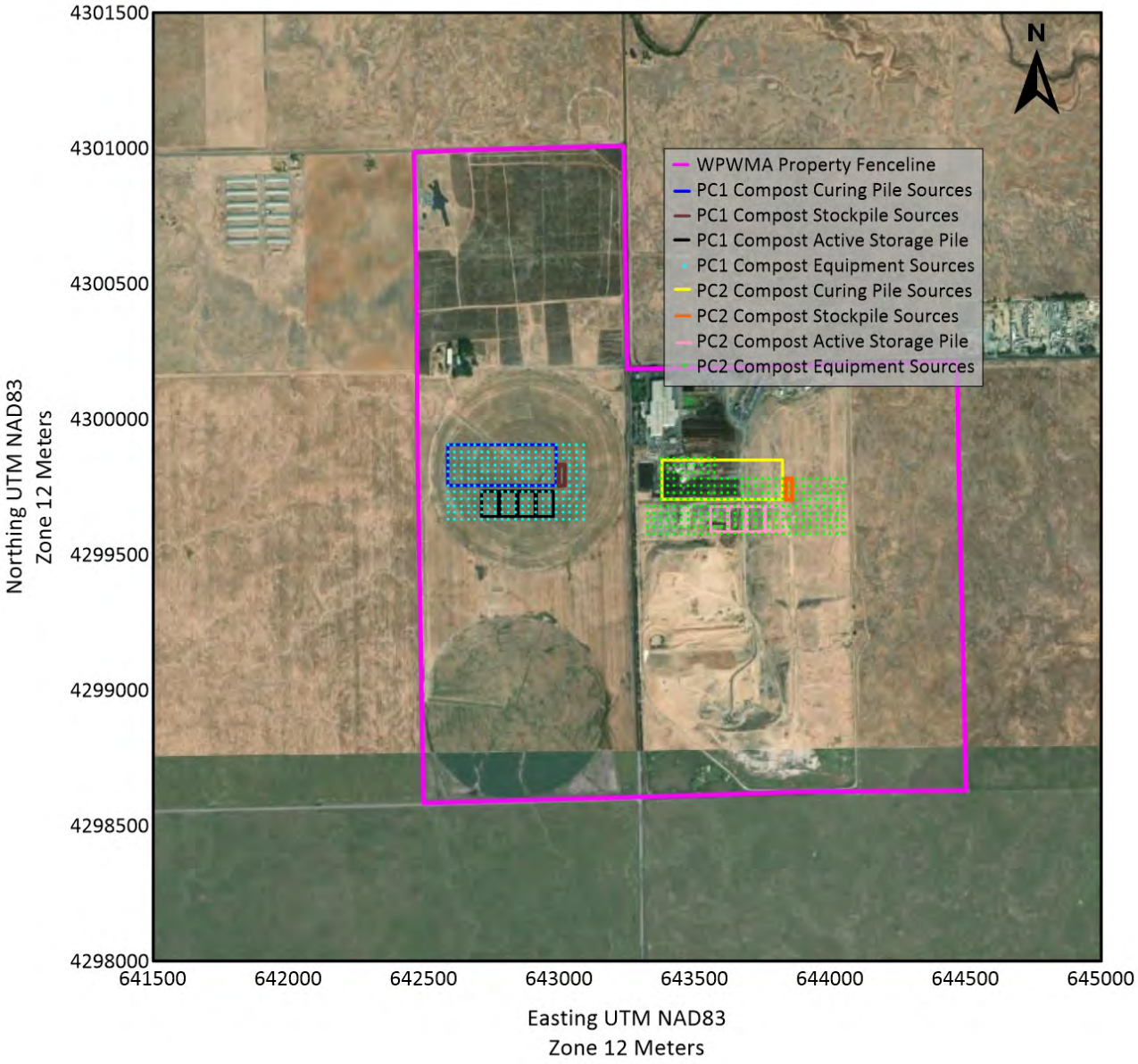

Figure B-2. Compost Operations Source Layout

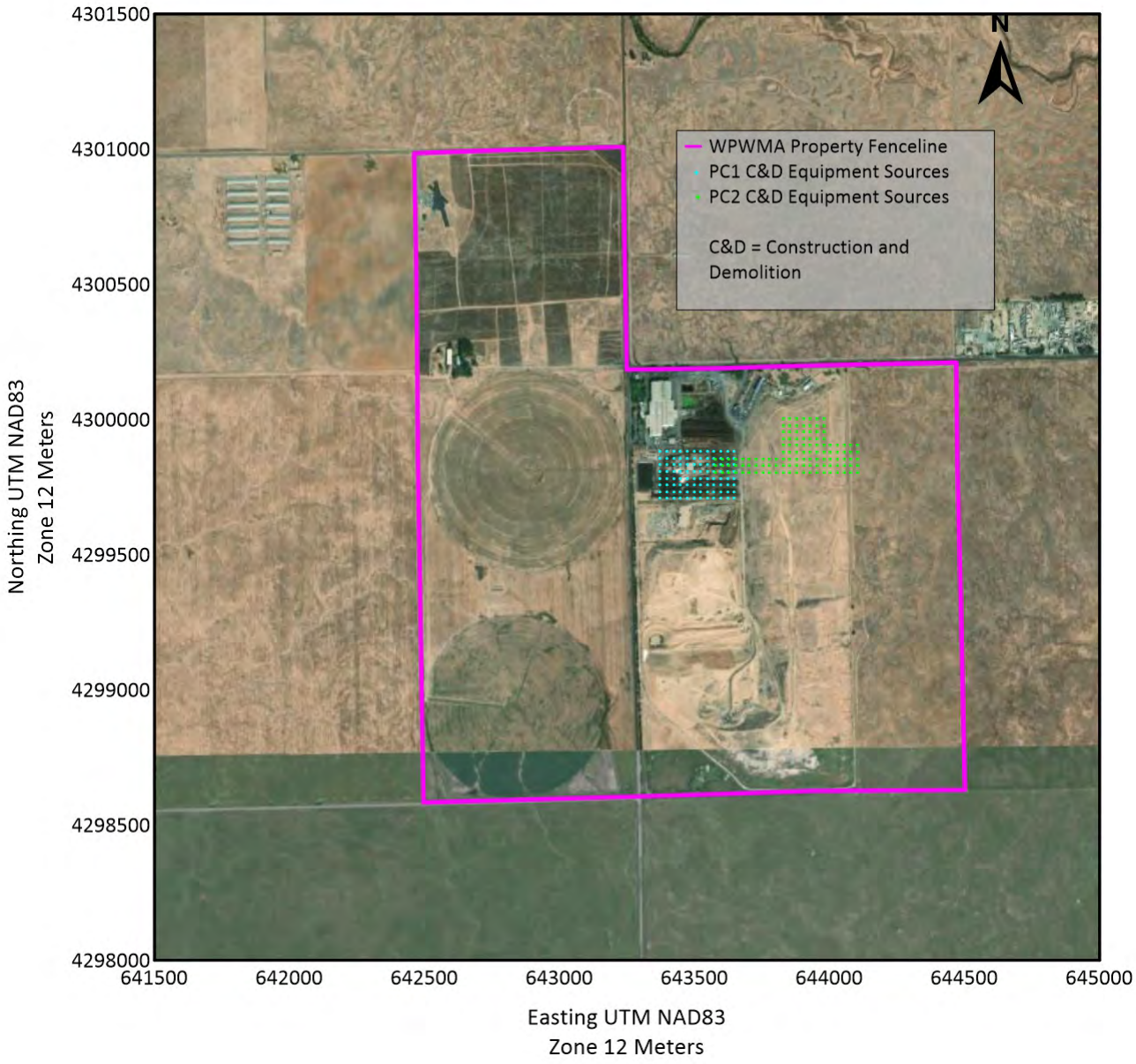

Figure B-3. Construction and Demolition Materials Processing Operation Source Layout

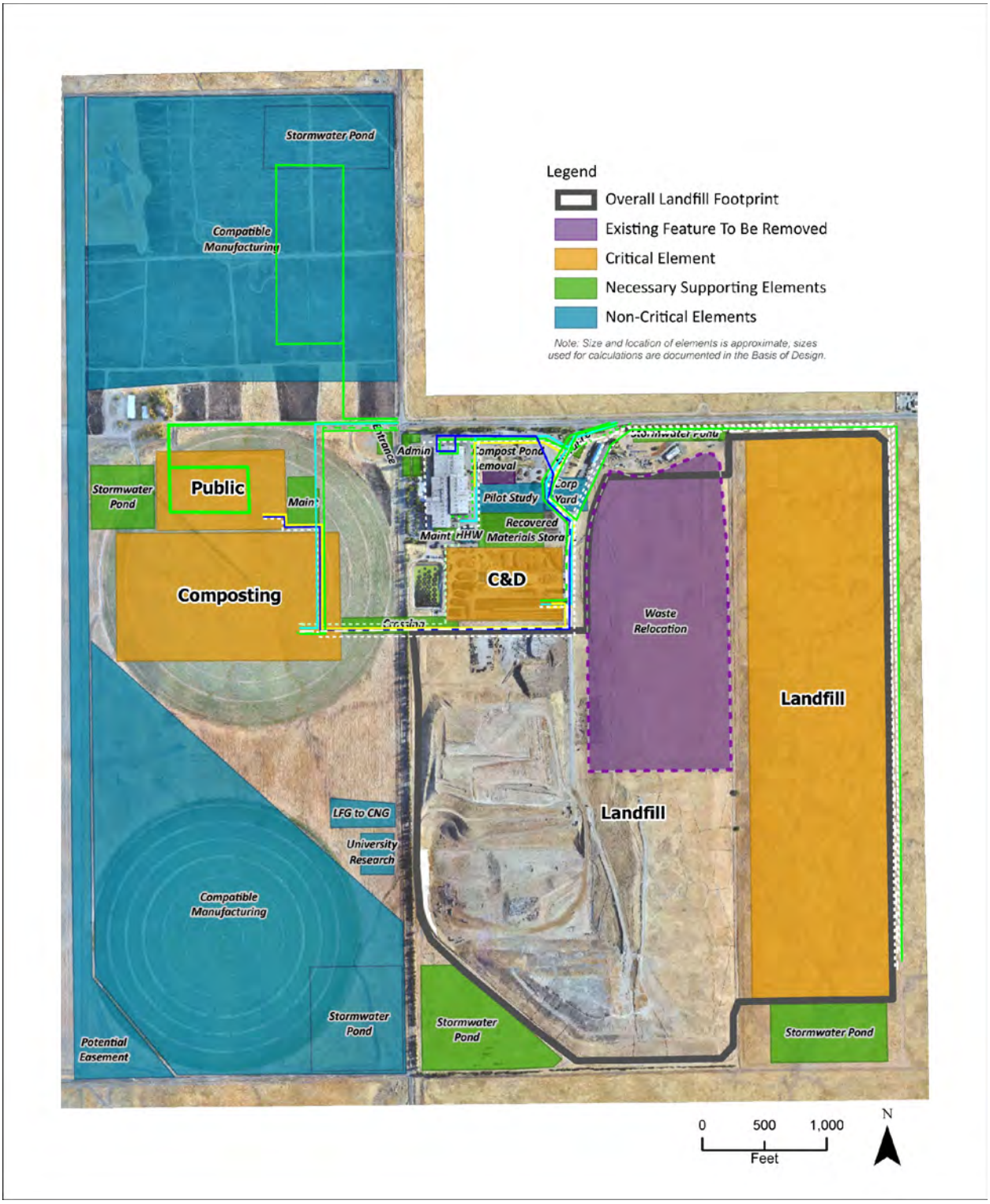

Figure B-4. Plan Concept 1 Onsite Roads Source Layout

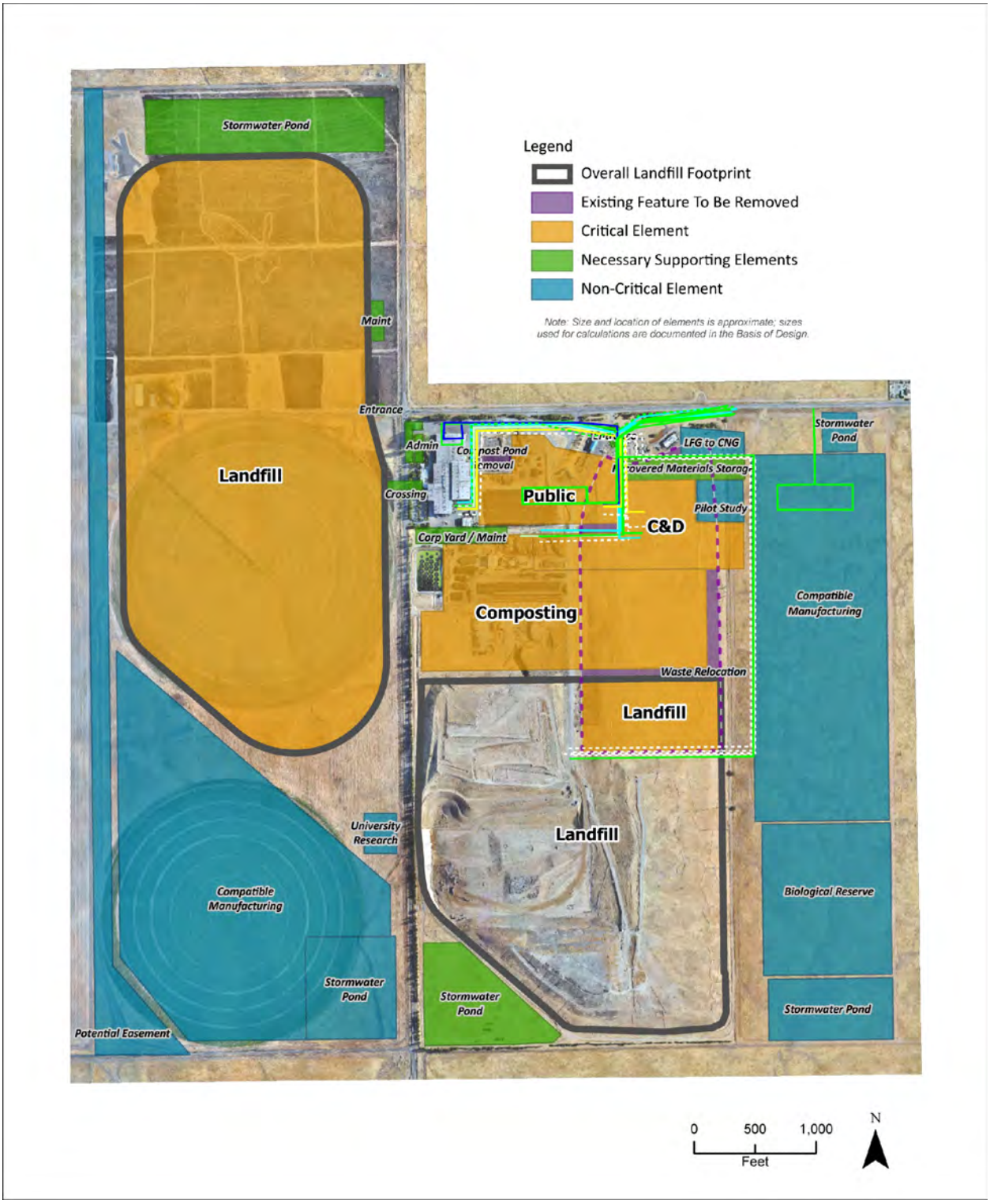

Figure B-5. Plan Concept 2 Onsite Roads Source Layout

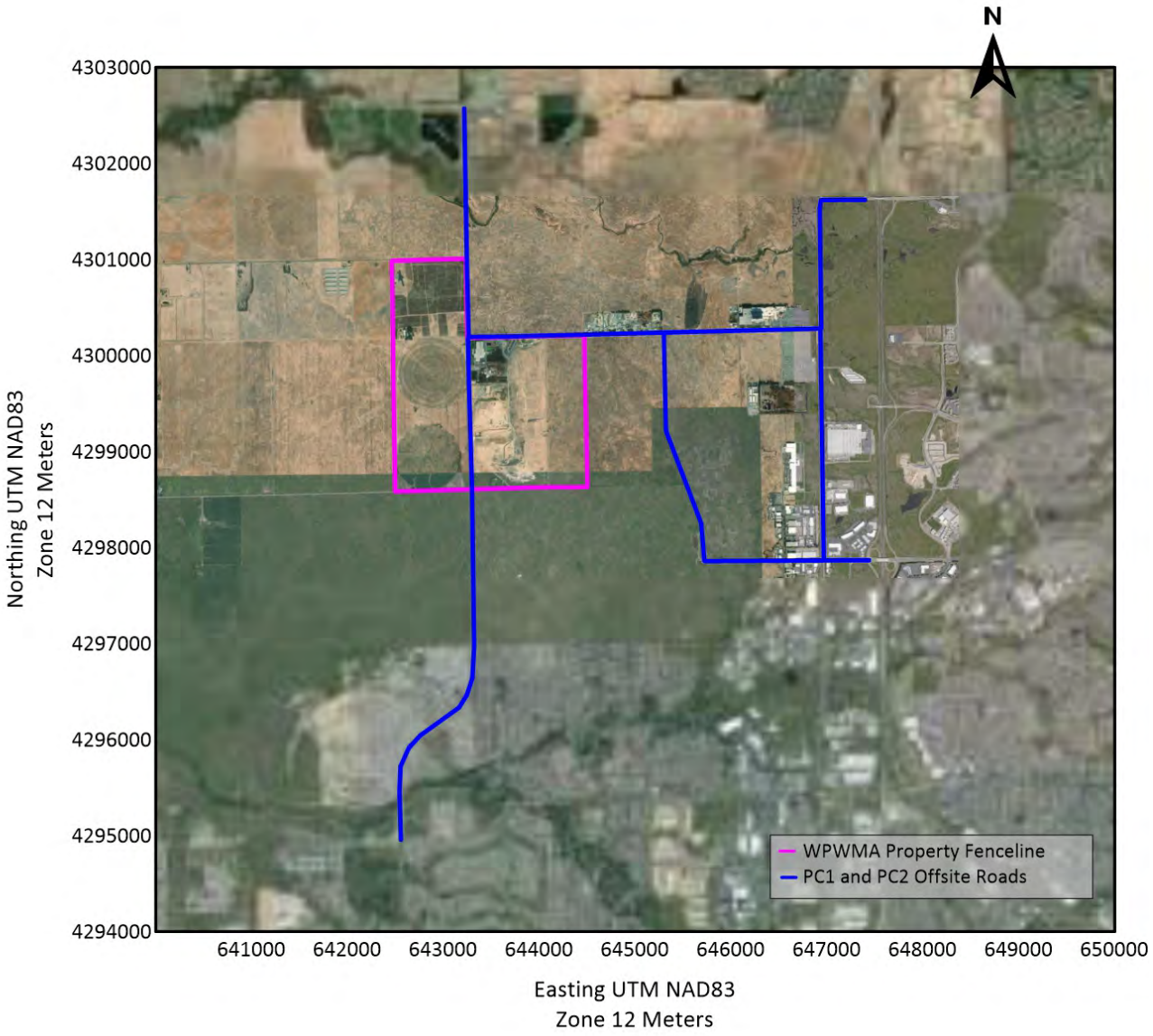

Figure B-6. Offsite Roads Source Layout

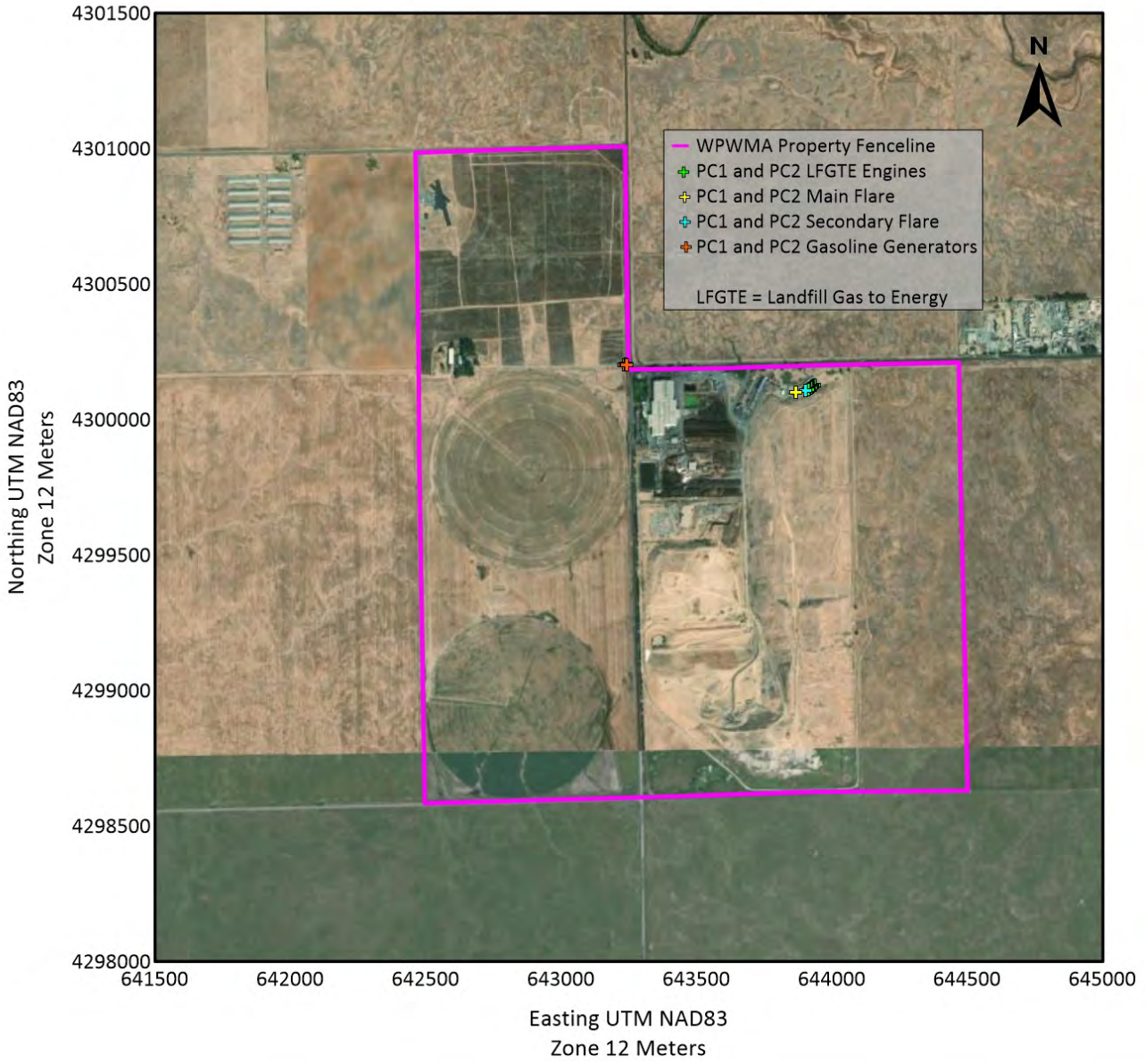

Figure B-7. Stationary Combustion Source Layout

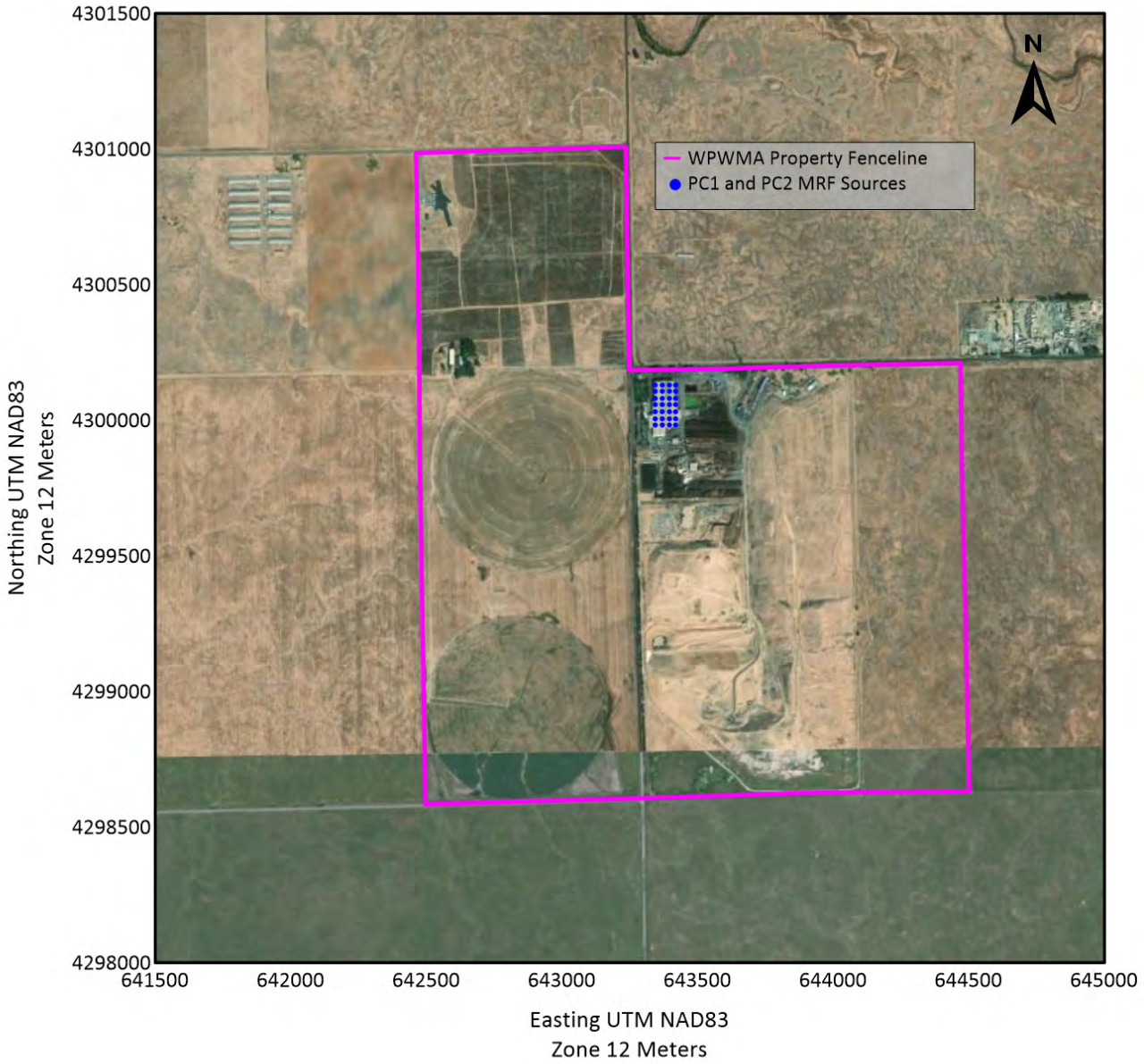

Figure B-8. MRF Source Layout

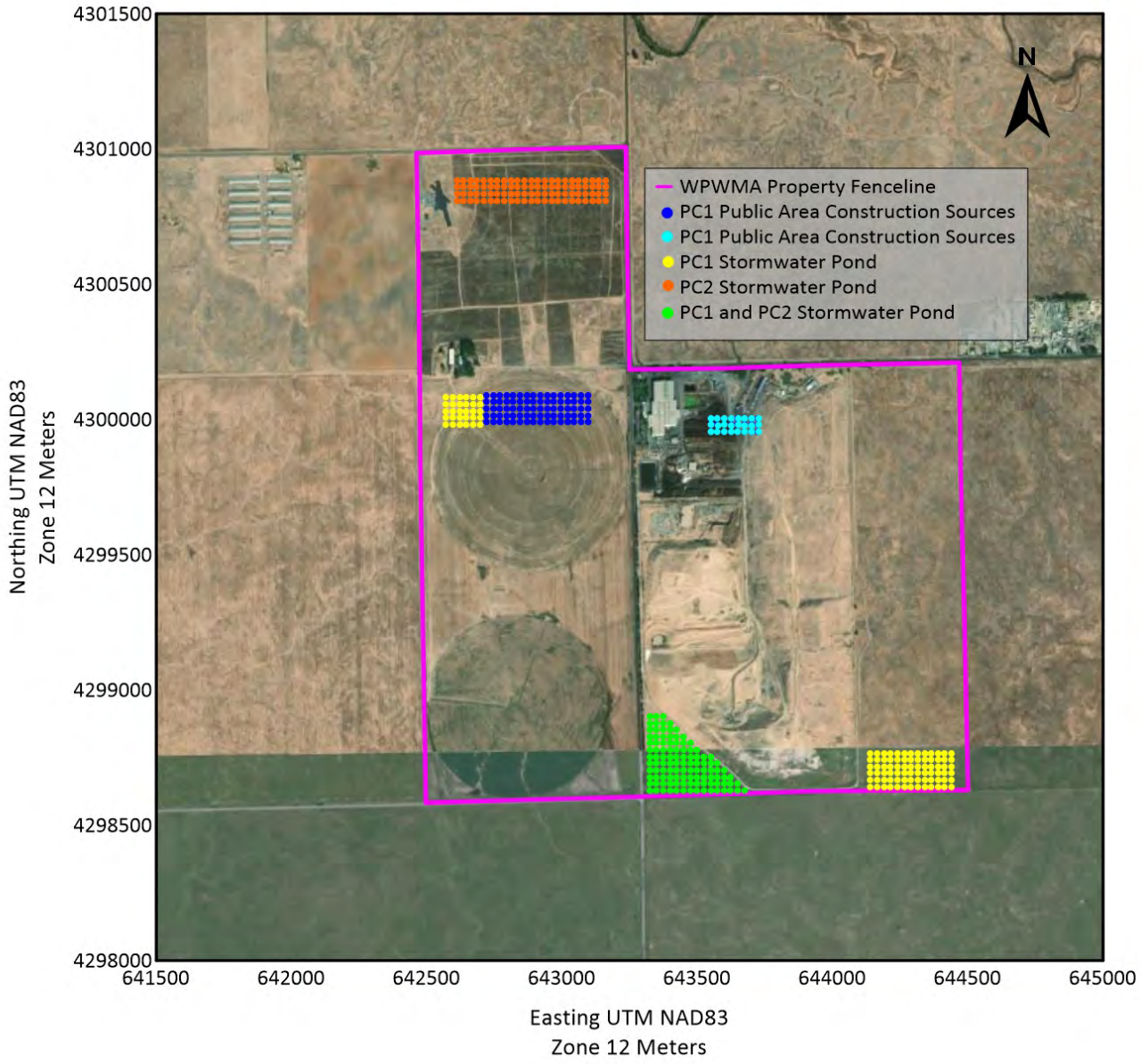

Figure B-9. Additional Facility Construction Source Layout

Appendix C
Health Risk Contour Plots

Appendix C. Health Risk Contour Plots

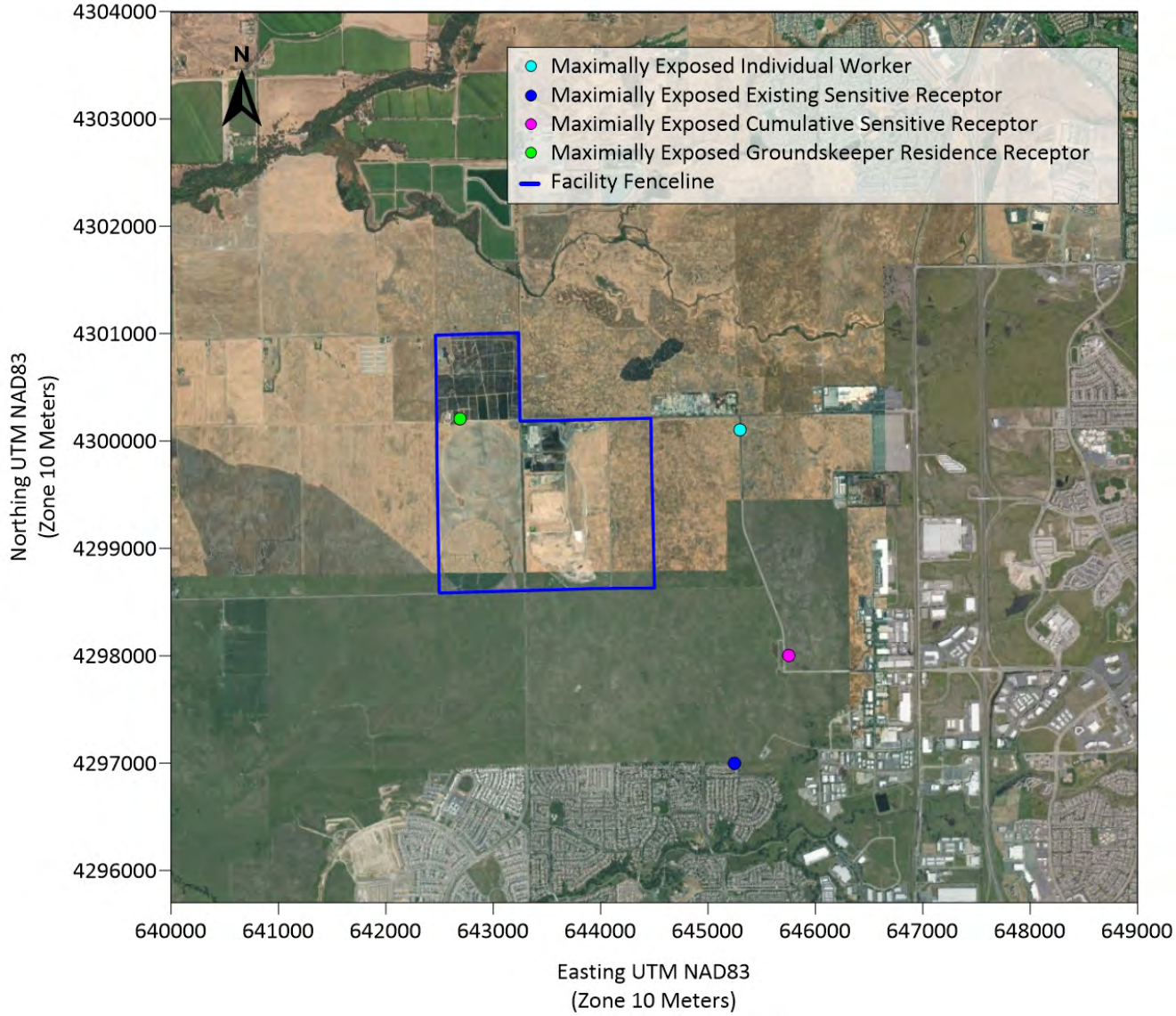

Figure C-1. Plan Concept 1 Cancer Risk Points of Impact

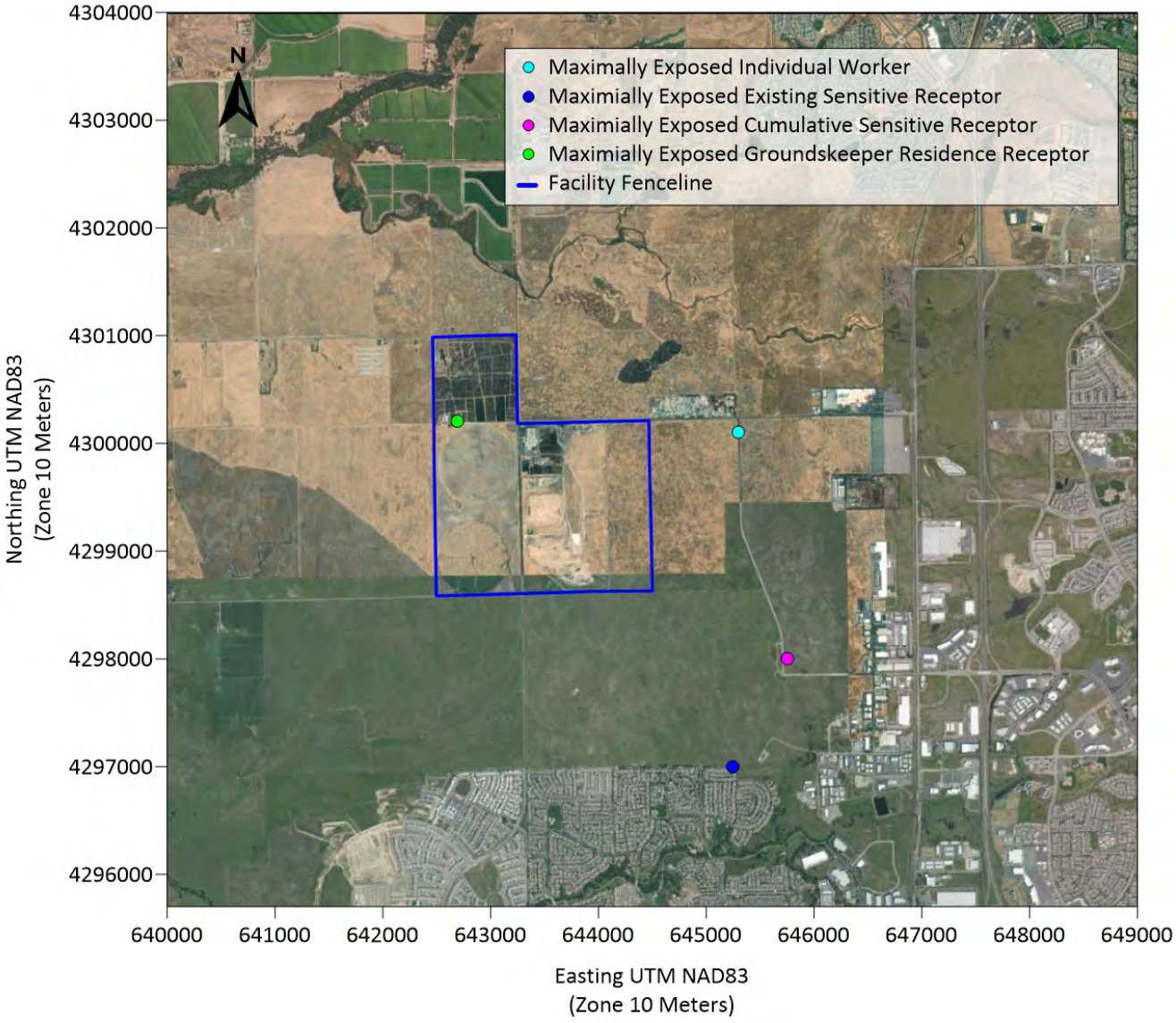

Figure C-2. Plan Concept 2 Cancer Risk Points of Impact

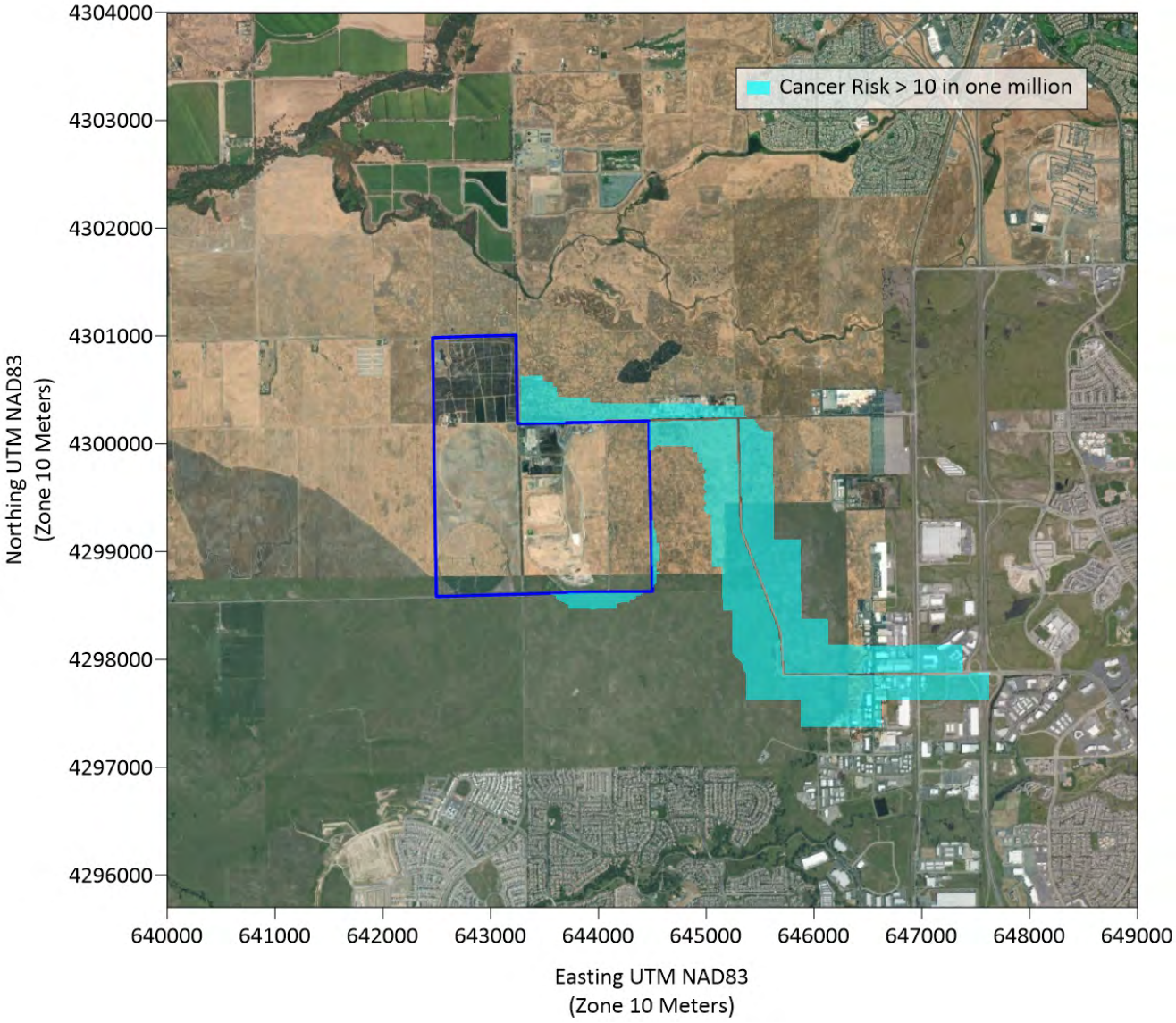

Figure C-3. Plan Concept 1 Cancer Risk 10 in One Million Contour

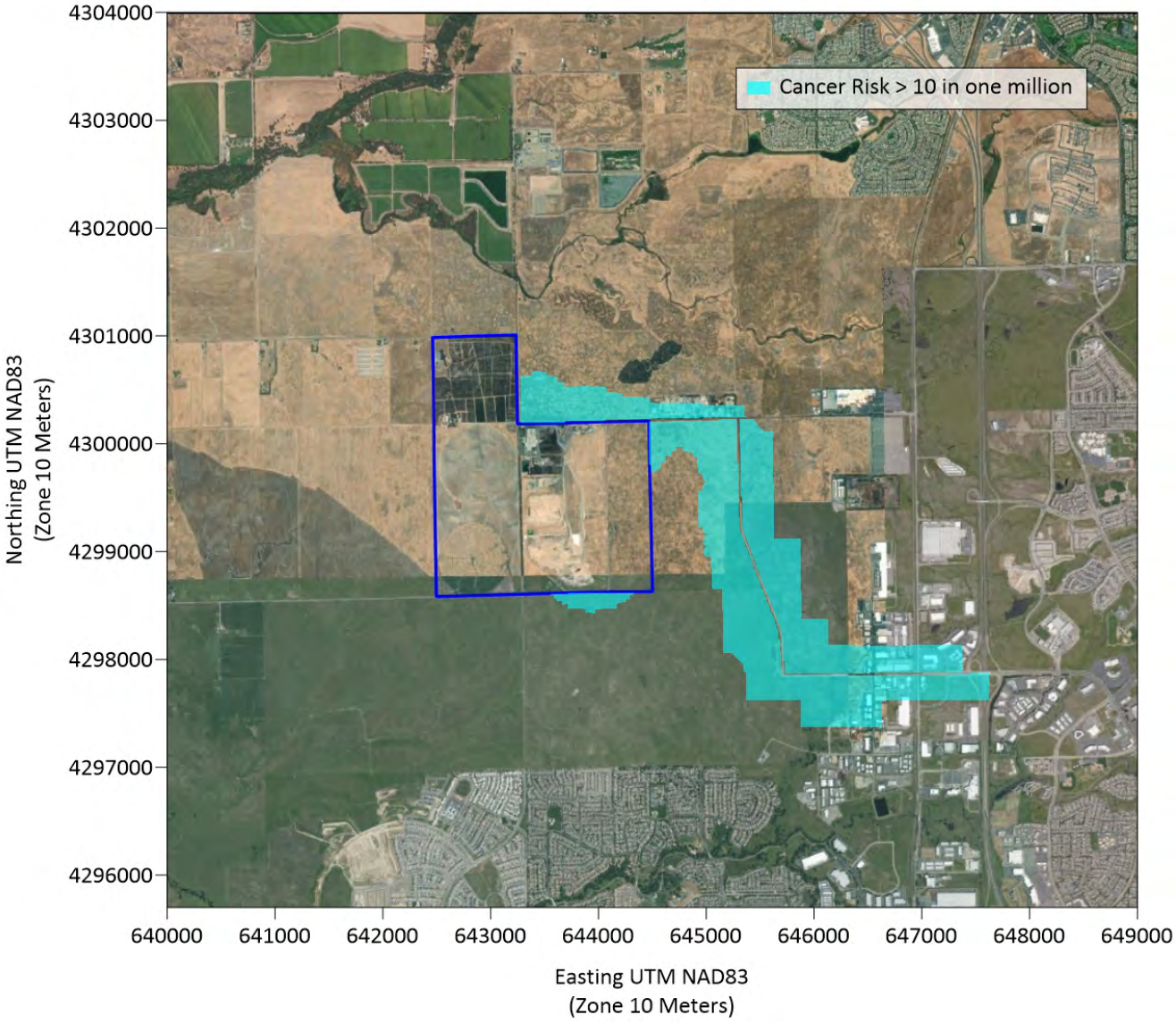

Figure C-4. Plan Concept 2 Cancer Risk 10 in One Million Contour

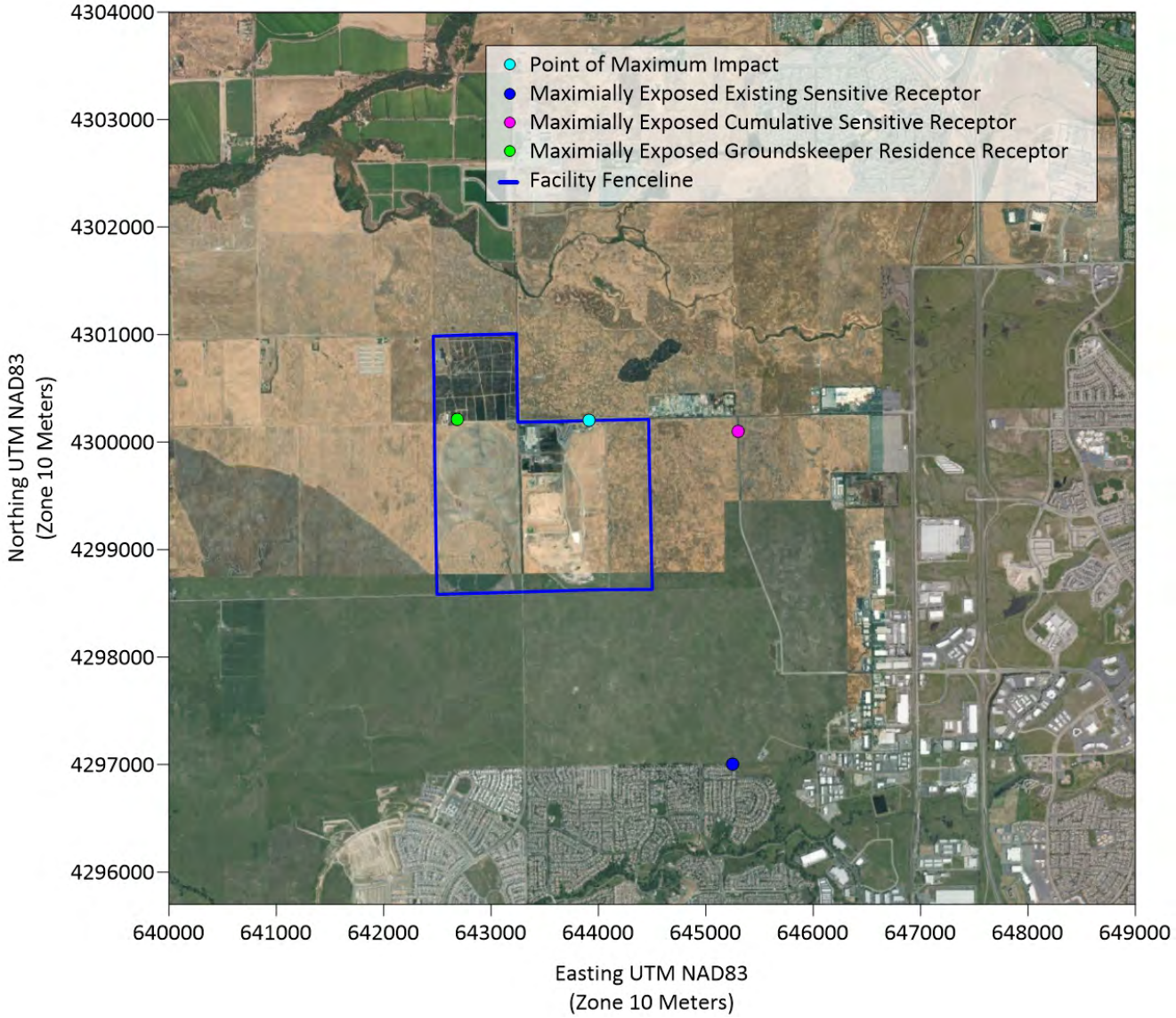

Figure C-5. Plan Concept 1 Noncancer Chronic Risk Points of Impact

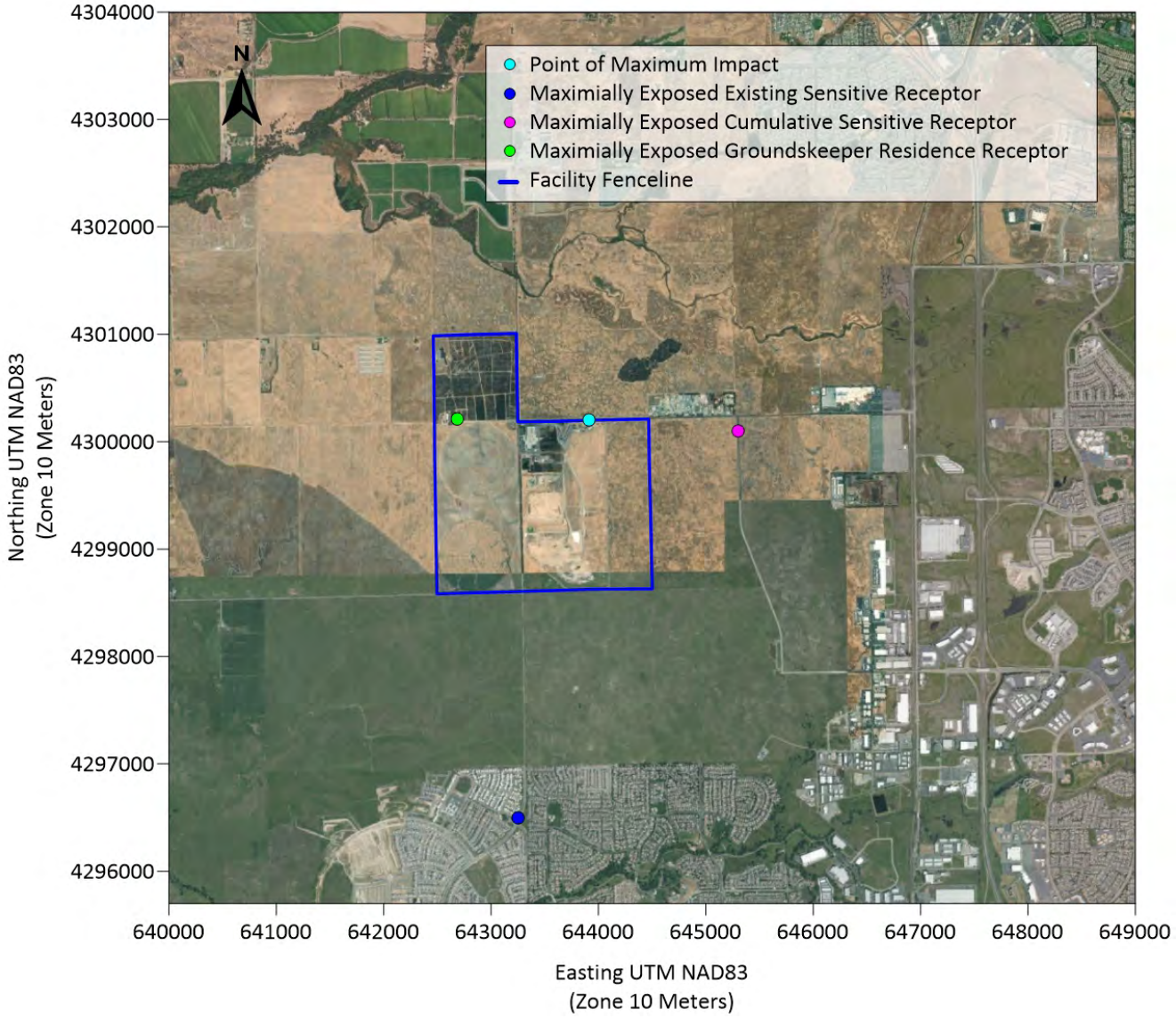

Figure C-6. Plan Concept 2 Noncancer Chronic Risk Points of Impact

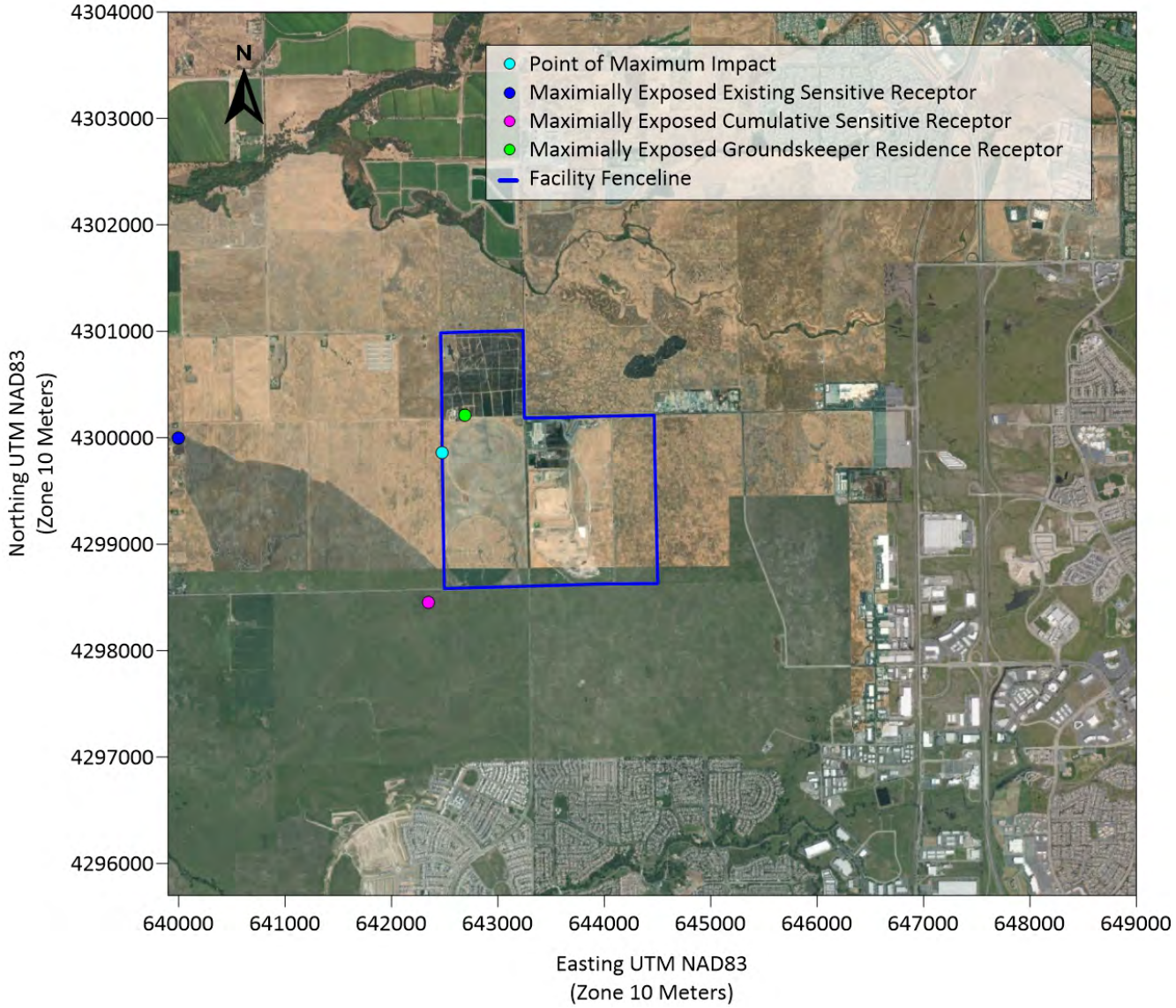

Figure C-7. Plan Concept 1 Noncancer Acute Risk Points of Impact

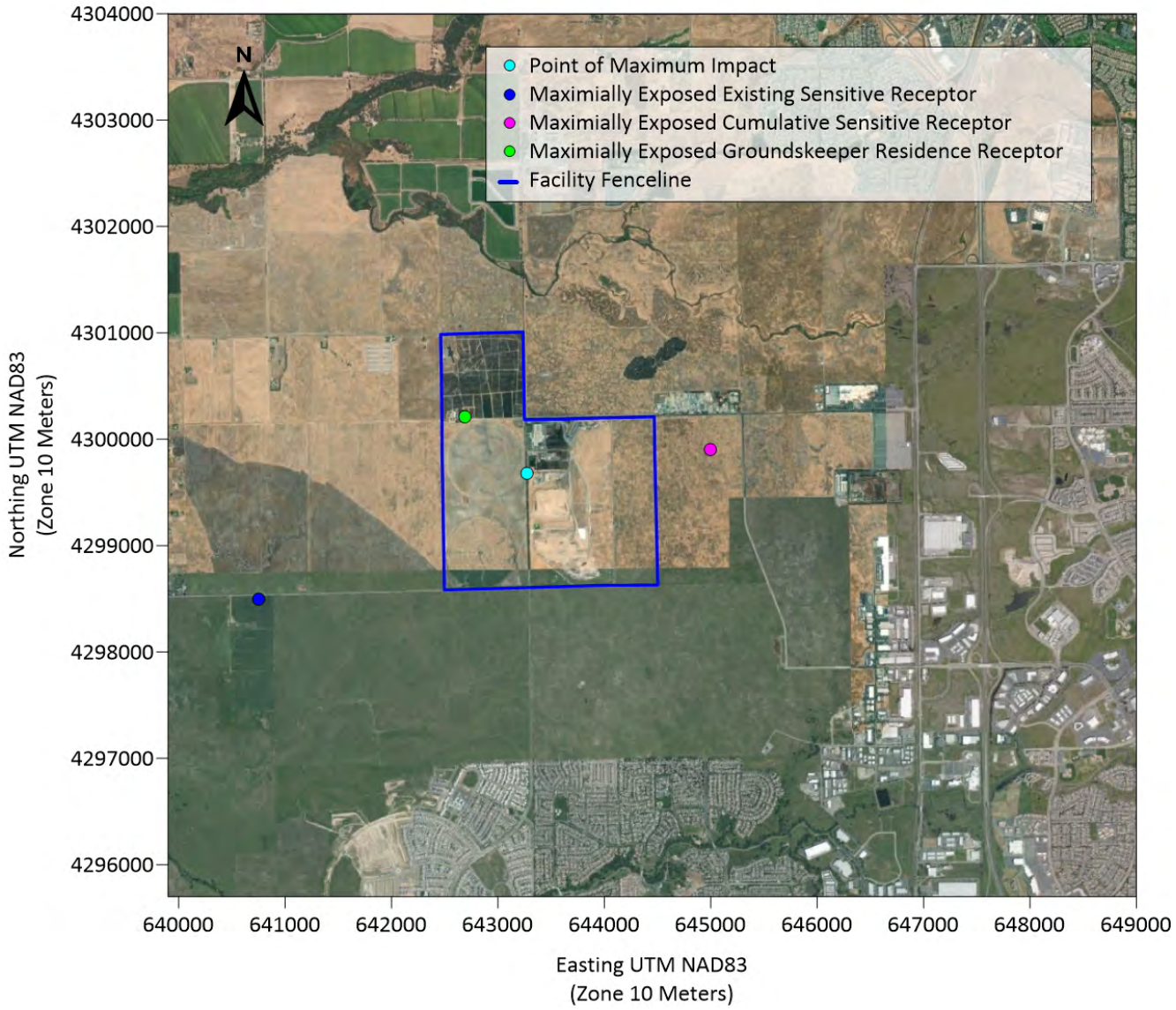

Figure C-8. Plan Concept 2 Noncancer Acute Risk Points of Impact

Appendix D
Groundskeeper Risk Results

Appendix D. Groundskeeper Risk Results

As described in the risk analysis, the onsite groundskeeper residence location is slated to be removed prior to the completion of Plan Concept 1 and Plan Concept 2. Results were calculated assuming the full 30--year exposure duration for carcinogenic impacts. However, since the groundskeeper location would not have the same 30-year exposure duration, actual risk would be less than the predicted risks presented in the following table. These results are included for informational purposes only and should not be used as a basis for determining significance for the proposed project.

Alternative	Residential Cancer Risk (per one million)	Chronic Health Risk (HI)	Acute Health Risk (HI)
Plan Concept 1	10.6	0.031	0.26
Plan Concept 2	6.5	0.007	0.24

HI = health index, dimensionless

Appendix C.6
Site Wide Odor Plan for the Western Placer Waste Management Authority's Solid Waste Processing and Disposal Facility

SITE WIDE ODOR PLAN

FOR THE

WESTERN PLACER WASTE MANAGEMENT AUTHORITY'S SOLID WASTE PROCESSING AND DISPOSAL FACILITY

Prepared by:
Western Placer Waste Management Authority

October 2020

Version 1.2

Western Placer Waste Management Authority
Site Wide Odor Plan

Table of Contents

1. Acronyms and Defined Terms 1
   A. Acronyms 1
   B. Defined Terms 1
2. Scope and Intent of the Site Wide Odor Plan 3
3. Overview of the WPWMA 4
4. WPWMA Facility Purpose 6
5. WPWMA Funding Sources 6
6. Agency/Stakeholder Roles & Responsibilities 7
   A. Western Placer Waste Management Authority 7
   B. MRF Operator 7
   C. Landfill Operator 8
   D. Waste Generators and Haulers 8
   E. Energy Developer 9
   F. WPWMA Consultants 9
   G. Placer County Air Pollution Control District 9
   H. Placer County Local Enforcement Agency 9
   I. Public 9
7. Regional Odor Sources 10
   A. WPWMA Odor Sources 10
   B. Non-WPWMA Odor Sources 10
8. On-site Odor Sources, Operational Planning and BMPs 13
   A. Overview of On-Site Odor Sources 14
   B. MRF 14
   C. Composting Facility 17
   D. Landfill 22
   E. Landfill Gas 25
   F. Planning and Scheduling Operational Activities 27
9. Weather & Topography 27
10. Odor Monitoring and Investigations 29
   A. Odor Monitoring and Dispersion Modeling System 29
   B. Predicative Odor Risk Modeling 30
   C. Routine On- and Off-site Odor Monitoring by WPWMA Staff 31
   D. Odor Notification System 33
   E. Odor Notification Investigation Protocol 33
   F. Odor Notification Investigation Report Procedures 37

Western Placer Waste Management Authority
Site Wide Odor Plan

Table of Contents
(continued)

G. Operational Review, Analysis and Adjustment 37
11. Public Education & Outreach 38
A. Annual Meetings 38
B. Website 39
C. National Night Out Event 39
12. Review of Odor Control Technologies 40
13. Reporting and Recordkeeping 40
14. WPWMA Board Approval Process and Availability of Funding 40

REFERENCES
FIGURE 3-1 SITE LOCATION
FIGURE 7-1 POTENTIAL REGIONAL ODOR SOURCES
FIGURE 8-1 OVERALL CONTRIBUTION TO SITE ODOR BY PROCESS
FIGURE 8-2 WPWMA FACILITY SITE LAYOUT
FIGURE 8-3 COMPOST EMISSION CURVE
FIGURE 10-1 HIGH ODOR RISK WIND DIRECTION ZONE
FIGURE 10-2 ROUTINE OFF-SITE MONITORING LOCATIONS
FIGURE 10-3 ODOR NOTIFICATION INVESTIGATION ZONE
APPENDIX A: BMP CHECKLIST
APPENDIX B: 2015 ODOR STUDY
APPENDIX C: COMPOST ODOR IMPACT MINIMIZATION PLAN
APPENDIX D: ODOR RISK FORECASTING TOOL
APPENDIX E: ODOR INVESTIGATION SUMMARY REPORT TEMPLATE
APPENDIX F: LFG AND LEACHATE MANAGEMENT SOP

1. ACRONYMS AND DEFINED TERMS

The following is a listing of select acronyms and defined terms used throughout this document.

A. Acronyms

ADC	Alternative Daily Cover
ASP	Aerated Static Pile
BMP	Best Management Practice
C&D	Construction and Demolition
GCCS	Landfill Gas Collection and Control System
HHW	Household Hazardous Waste
LCRS	Leachate Collection and Removal System
LEA	Local Enforcement Agency
LFG	Landfill Gas
MRF	Materials Recovery Facility
MSW	Municipal Solid Waste
NOX	Oxides of Nitrogen
OIMP	Odor Impact Minimization Plan
PCAPCD	Placer County Air Pollution Control District
ROG	Reactive Organic Gasses
SVAB	Sacramento Valley Air Basin
SWOP	Site Wide Odor Plan
VOC	Volatile Organic Compound
WPWMA	Western Placer Waste Management Authority
WRSL	Western Regional Sanitary Landfill
WWTP	Wastewater Treatment Plant

B. Defined Terms

Gate Hours	The hours the WPWMA's facility is open for the receipt of wastes. Currently 7 am to 5 pm on weekdays and 8 am to 5 pm on weekends
Member Agencies	The cities of Lincoln, Rocklin, Roseville and the County of Placer
Observed Holidays	Observed Holidays include: January 1st, Martin

	Luther King Jr. Day, Lincoln's Birthday, Presidents' Day, Memorial Day, July 4th, Labor Day, Columbus Day, Veterans Day, Thanksgiving and the day after Thanksgiving, and Christmas Day. Where any of these noted holidays falls on a Saturday, the preceding Friday will be considered the "Observed Holiday". Where any of these noted holidays fall on a Sunday, the following Monday will be considered the "Observed Holiday".
Participating Agencies	Includes the Member Agencies and the cities of Auburn, Colfax and the Town of Loomis
Residue or Residual Waste	Non-recovered materials which are landfilled following processing at the MRF to recover recyclable commodities.

2. SCOPE AND INTENT OF THE SITE WIDE ODOR PLAN

The Site Wide Odor Plan (SWOP) provides an overview of the Western Placer Waste Management Authority (WPWMA), its facilities and services, and potential operational odor sources and associated mitigation measures implemented, contemplated and evaluated via pilot-scale testing at the facility.

Acknowledging that odors are a natural and unavoidable byproduct of the decomposition of organic materials, the WPWMA established the SWOP to provide clear, concise information about individual facility odor sources, operational and meteorological conditions that have the potential to exacerbate the perception of odors, and the measures the WPWMA takes to reduce the potential for facility odors to be perceived by nearby receptors.

The SWOP is intended to be used as a tool by the WPWMA and its facility operators, contractors, and consultants to consistently and proactively take the appropriate steps to reduce the potential for off-site odors while continuing to ensure that WPWMA and its facility operators, contractors, and consultants meet all applicable regulatory and contractual obligations for safely and efficiently managing the solid wastes received, processed or landfilled. Compliance with current and future regulations, particularly those regulations that address enhanced management of organic wastes, have the potential to exacerbate odors from the WPWMA's facility.

The SWOP establishes best management practices (BMPs) utilized by the WPWMA to mitigate the release of odors from WPWMA facilities -- including the material recovery facility, landfill, landfill gas collection and control system (GCCS), and composting operations. The SWOP includes measures to prevent, monitor, and address odors. The BMPs contained in the SWOP are intended to: (1) be fully protective to the health, safety and well-being of the WPWMA employees, its facility operators, contractors, consultants, and facility users; and (2) ensure that WPWMA acts as a good neighbor by reducing its odor-emitting potential. The BMPs identified in this SWOP reflect current operating and regulatory conditions. Changes to operations that result from changes in regulations or programs operated by the Participating Agencies may necessitate the revision of this document.

The SWOP is intended to be considered by the Placer County Air Pollution Control District (PCAPCD) (and any other applicable regulatory bodies that oversees the WPWMA's operation) when evaluating community complaints and non-compliance issues relating to odor. Compliance with the SWOP is an indicator that the WPWMA has implemented measures to mitigate odor impacts consistent with best practices and installed equipment. When determining whether or not to issue a Notice of Violation for nuisance and determining the appropriate settlement terms when a violation is issued, including a potential deterrent monetary penalty, PCAPCD will fully consider WPWMA's adherence to, and degree of compliance with, the procedures identified in the SWOP.

Finally, the SWOP provides insight to current and future nearby receptors of odors from the WPWMA's facility and reasons facility odors may be periodically

noticeable. The SWOP provides details on how the neighboring community can report odor complaints to the WPWMA and PCAPCD, how the WPWMA investigates and responds to the odor notifications/complaints, how the WPWMA cooperates on odor complaints received by the PCAPCD, and the measures implemented by the WPWMA to adjust its operations (where practical) to reduce the potential for odors.

3. OVERVIEW OF THE WPWMA

The WPWMA was created pursuant to a Joint Exercise of Powers Agreement originally dated October 3, 1978, by the County of Placer, City of Roseville, City of Rocklin, and City of Lincoln. These four entities are collectively referred to as the "Member Agencies". The City of Auburn, City of Colfax, and Town of Loomis utilize the WPWMA's facilities; these entities and the Member Agencies are collectively referred to as the "Participating Agencies". The WPWMA is governed by a Board of Directors made up of elected officials from each of the Member Agencies.

The WPWMA was established for the purpose of acquiring, owning, operating, and maintaining a sanitary landfill site and all related improvements. In 1978, after evaluating an area between 350 and 400 square miles in western Placer County for suitable locations to site a sanitary landfill, the present location of the Western Regional Sanitary Landfill (WRSL) was selected. Considerations when selecting the WRSL site included technical aspects such as geology and soil conditions as well as compatibility with surrounding land uses and aesthetic factors such as odors.[1]

The WRSL is located on approximately 320 acres in the Sunset Area (formerly known as the Sunset Industrial Area) in unincorporated Placer County north of the City of Roseville, south of the City of Lincoln and west of the City of Rocklin. The permitted area of the WRSL is approximately 291 acres, with approximately 231 acres for disposal activities. The WRSL began disposal operations in 1978 and is currently operated under a contract with a private Landfill Operator. The WPWMA also owns approximately 465 acres west and 158 acres immediately east of the active WRSL to support future expansion of its operations as necessary. As of 2019, the western and eastern properties are not permitted for solid waste-related uses; however, the WPWMA initiated environmental review in January 2019 to utilize the western and eastern properties for solid waste-related operations in the future. The WPWMA's properties are shown in Figure 3-1.

In response to California Assembly Bill 939, the WPWMA constructed the Materials Recovery Facility (MRF) to assist the Participating Agencies in complying with the regulation's waste diversion mandates. The MRF began operations in 1995 and has been operated continuously under a contract with a private MRF Operator. Non-recovered wastes ("Residue" or "Residual Waste") generated at the MRF are transported by the MRF Operator to the WRSL for final disposal. Current MRF operations include: 1) mixed waste receiving and processing areas for recovery of recyclable and marketable materials, 2) an organics composting area where greenwaste, foodwaste, and paper waste are

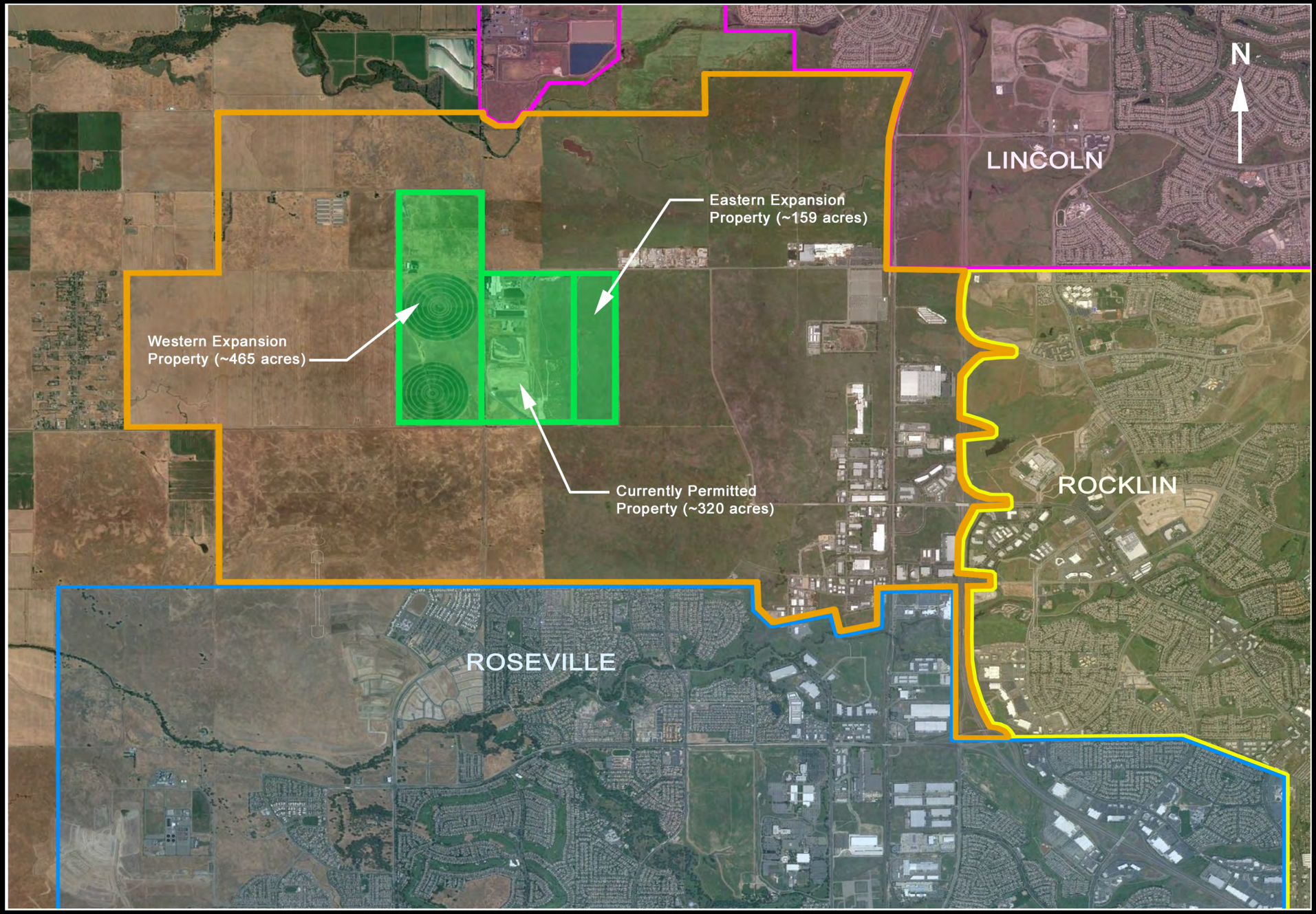

CELEBRATING OVER 40 YEARS OF SERVICE
WPWMA
EST. 1978

WPWMA Site-Wide Odor Plan
Site Location

FIGURE
3-1

composted[1], 3) a woodwaste processing area where wood materials are processed to produce biofuels and landscaping products, 4) two household hazardous waste (HHW) facilities where HHW and universal wastes received from the public or recovered from the MRF are consolidated prior to shipment offsite for recycling or disposal, and 5) a commercial and residential recyclable buyback and drop-off center (Buyback) where clean, source-separated recyclable materials are received and blended with recyclable materials recovered from the MRF for shipment to recyclable commodity end users.

Placer County provides staffing to the WPWMA, including financial management scalehouse operations, general and engineering oversight of all facility operations, and implementation of public education and outreach programs. WPWMA staff also provide recommendations regarding solid waste policies and operations to the WPWMA Board of Directors.

The WPWMA has established long-term contracts with private entities for the operation and maintenance of the MRF and WRSL. The WPWMA also retains the services of professional engineering and other firms related to the ongoing facility operation, including solid waste systems design, water quality, GCCS design and operation, and odor monitoring and air dispersion modeling.

4. WPWMA FACILITY PURPOSE

The WPWMA's facilities receive and process solid wastes from within Placer County for the purposes of: 1) recovering marketable, recyclable materials that can be reintroduced into the local, national or global economy, 2) composting select organic materials to produce a marketable soil amendment, 3) safely recovering household hazardous wastes, universal wastes, and electronic wastes for off-site recycling or destruction, and 4) disposing of non-marketable solid wastes within a sanitary landfill in accordance with applicable regulatory and legal requirements.

5. WPWMA FUNDING SOURCES

The WPWMA's primary funding source is tipping fees charged to customers to drop off their wastes at the WPWMA's facility. Additional sources of funding include, but are not necessarily limited to: royalty payments from the Energy Developer, rent payments associated with real property leases, grant monies received from the state (typically related to oil recycling) and interest earned on the WPWMA's reserve balances.

The WPWMA does not receive revenue from direct parcel assessments, the General Funds of any of its Participating Agencies, or from local, state or federal taxes.

[1] The WPWMA is fully permitted by CalRecycle to compost greenwaste. Approval of a pilot project to co-compost foodwaste and/or soiled paper with greenwaste was granted by the LEA (acting on behalf of CalRecycle) on September 13, 2016.

The WPWMA Board periodically reviews and adjusts its tipping fee structure to ensure sufficient funding is available for current and future operational needs.

6. AGENCY/STAKEHOLDER ROLES & RESPONSIBILITIES

Several primary stakeholders share an interest in regional odors, including those generated and emitted from the WPWMA's facility, and have roles and responsibilities related to the management, control and reporting of these odors.

A. Western Placer Waste Management Authority

The WPWMA is the owner and legal operator of the MRF, WRSL, composting, HHW and Buyback facilities. The WPWMA holds all operating permits for the facility and is directly responsible for complying with the permits and working with the appropriate regulatory agencies on permit-related matters.

The WPWMA Board of Directors has the ability and responsibility to establish policy related to use of the facility by generators and transporters of waste materials, how the facility is operated and maintained by contracted entities, and what, if any, specific policy provisions exist related to control of odors from the WPWMA's facility.

The WPWMA contracts with multiple third-party entities to operate and maintain specific elements of the WPWMA's facilities. As such, the WPWMA has the ability to integrate odor monitoring, mitigation and reporting requirements into these various contracts as it deems appropriate and in the best interest of the WPWMA and its customers.

B. MRF Operator

The MRF, composting, HHW and Buyback facilities (collectively referred to as the MRF) are operated under a single contract with a private firm.

The MRF Operator is directly responsible, as outlined in their contract with the WPWMA, for the operation and maintenance of these facilities. As such, once waste is received at the facility, the MRF Operator controls the flow and management of these materials, including when recyclable commodities are shipped off-site to end-users and when Residual Wastes are transported to the WRSL for final disposal.

The MRF Operator is contractually obligated to inspect waste loads directed by WPWMA staff to the MRF to determine if the materials are suitable for processing. If the MRF Operator judges a load to have too little recyclable or marketable value or that it contains materials that may damage MRF processing equipment, the MRF Operator may elect to redirect the materials to the WRSL for disposal. This provides the MRF Operator the ability to also judge whether a particular load has an excessive level of odor and whether or not it would be best (from a facility odor perspective) to process the materials at the MRF, direct them to the Composting Facility, or divert them to the WRSL for immediate disposal.

The MRF Operator has some ability to adjust MRF operations to reduce the potential for heightened perception of off-site odors. Specifically, depending on other operational factors, the MRF Operator can adjust how and when certain materials are processed based on the time of day and day of the week, actual and predicted weather conditions, and potential for odors from the materials processed.

The MRF Operator is also responsible for maintaining the MRF, including regular and periodic cleaning and other "housekeeping" efforts.

The MRF Operator does not have direct control over the method in which materials are generated and hauled to the MRF for disposal. As such, odors associated with waste materials during transport to the MRF are outside of the MRF Operator's control.

C. Landfill Operator

The WRSL is operated under a separate contract than the MRF.

The Landfill Operator is directly responsible, as outlined in their contract with the WPWMA, for operation and maintenance of the WRSL as it relates to the receipt, burial, and covering of the waste. The Landfill Operator is not responsible for the design, installation, operation or maintenance of the GCCS.

The Landfill Operator has some ability to adjust operations to reduce the potential for heightened perception of off-site odors. Specifically, depending on other operational factors, the Landfill Operator can adjust where and how to fill sections, within the WPWMA-approved site fill sequence plan, of the WRSL and how wastes are blended with other wastes and covered during the burial process to reduce the potential for odors.

The Landfill Operator does not have direct control over the method in which materials are generated and hauled to the WRSL for disposal. As such, odors associated with waste materials during transport to the WRSL are outside of the Landfill Operator's control.

D. Waste Generators and Haulers

Neither the WPWMA nor its contractors and consultants are responsible for the transport and delivery of waste materials to the WPWMA's facility. Some materials delivered to the WPWMA's facility have a high potential for noticeable odors because of the type of material (e.g. wastewater treatment plant sludge and foodwaste, etc.) or the conditions in which the material was collected and stored prior to transport (e.g. residential greenwaste that begins to decompose and generate odors prior to collection by the hauler, etc.).

The responsibility for the individual generators and haulers to mitigate odors is outside the purview of the SWOP. However, the WPWMA and its

contractors and consultants endeavor to manage these types of materials in a manner aimed at reducing their noticeable off-site odor potential.

E. Energy Developer

The WPWMA currently leases land to a private energy developer who owns and operates a landfill gas-to-energy facility located at the northern edge of the WRSL. The Energy Developer receives LFG provided by the WPWMA for the purposes of generating and selling electricity produced by running internal combustion engines fueled by LFG.

The majority of LFG generated at the WRSL is conveyed by the WPWMA to the Energy Developer, thus the Energy Developer's facility serves as the primary control element for the destruction of LFG.

F. WPWMA Consultants

The WPWMA currently contracts with an engineering firm to operate, manage and maintain the WPWMA's GCCS. Their primary role is to operate the GCCS to maintain regulatory compliance and minimize emissions of landfill gas to the atmosphere which also serves to reduce LFG-related odors.

G. Placer County Air Pollution Control District

The PCAPCD is responsible for the regulation and enforcement of air quality regulations within Placer County consistent with federal, state and local statutes.

The PCAPCD provides regulatory oversight and asserts enforcement of the WPWMA's air-related operating permits.

H. Placer County Local Enforcement Agency

The LEA has been delegated authority by CalRecycle to enforce state law as it relates to the operation and closure of solid waste landfills, MRFs and composting facilities.

The LEA provides regulatory oversight and enforcement of the WPWMA's non-air and non-water-related operating permits.

I. Public

The public, particularly those who live and work proximate to the WPWMA's facility, can serve as real-time field monitors for the presence of odors. The WPWMA's website (www.WPWMA.ca.gov) provides an easy and convenient method for the public to provide feedback regarding when and where they experience odors, how long the odors are noticeable, and a description of the odor.

Information provided by the public provides useful data to the WPWMA that can serve to augment data collected from its odor monitoring and air dispersion system for evaluating the migration of odor from the site. To be

of greatest use, it is important that odors are reported to the WPWMA as timely and accurately as possible, as described in Section 10.D.

7. Regional Odor Sources

The WPWMA is one of several known odor sources located in or adjacent to Placer County's Sunset Area. The following provides an overview of potential odor sources at or proximate to the WPWMA's facility; Figure 7-1 shows the location of these potential odor sources.

A. WPWMA Odor Sources

In its 2007 and 2009 studies conducted for the WPWMA, SCS Engineers identified the following primary sources of odor at the WPWMA's facility: 1) MRF, 2) composting facility, 3) landfill active face, and 4) landfill gas. These odor sources are discussed in greater detail in Section 8 of this report.

B. Non-WPWMA Odor Sources

i. Non-Ag (not exempt from PCAPCD nuisance regulations)

a. Rio Bravo

The Rio Bravo biomass facility is located approximately 1.5 miles east of the WPWMA's facility and directly south of the Thunder Valley Casino Resort.

The Rio Bravo facility receives and processes woody materials for the purposes of generating electricity. As part of its operation, Rio Bravo maintains stockpiles of ground wood fuel. In some cases, these stockpiles of wood fuel can begin to decompose and generate odors similar to the WPWMA's composting operations.

b. Mallard Creek

The Mallard Creek facility is located approximately 2.2 miles southeast of the WPWMA's facility. Mallard Creek produces and markets equine and poultry bedding materials, landscaping products, pelletized fuel products and industrial fibers. These products are produced predominately from woody material received and processed at Mallard Creek's facility. Much like the Rio Bravo facility, ground and stockpiled materials have the potential to generate odors similar to that of the WPWMA's composting operations.

c. Green Solutions and More

The Green Solutions and More facility is located approximately ¾ mile east of the WPWMA's facility and sits adjacent to the Inviro-Tec Facility. Green Solutions and More accepts greenwaste and woodwaste which is ground

WPWMA Site-Wide Odor Plan
Potential Regional Odor Souces

FIGURE
7-1

on-site to produce mulch, wood chips and compost. The facility also accepts soil and concrete for recycling. The green and wood materials have the potential to generate odors similar to that of the WPWMA's composting operations

d. Kamps Propane – Rocklin

Kamps Propane is a propane distributor located approximately 2.5 miles southeast of the WPWMA's facility and less than ½ mile due east of Blue Oaks neighborhood. The odorant added to propane can be similar to landfill gas or other landfill-related odors.

e. Inviro-Tec

The Inviro-Tec facility is located approximately ¾ mile east of the WPWMA's facility and site adjacent to the Green Solutions and More facility. Inviro-Tec owns and operates a facility that accepts and processes septic tank pumpings to separate the liquids from the solids. Liquids are pumped to the sanitary sewer while the solids are transported for disposal at the WRSL. Odors from Inviro-Tec's facility can be similar to that of a wastewater treatment plant or the landfill working face when sludges are received and managed.

f. Thunder Valley WWTP

The United Auburn Indian Community owns and operates a wastewater treatment plant at their Thunder Valley Casino. The 700,000 gallon per day facility located approximately 1.5 miles east of the WPWMA's facility serves the Thunder Valley Casino Resort exclusively. Sludge from the Thunder Valley WWTP is hauled by Recology to the WRSL or other sanitary landfill for disposal. Odors from the Thunder Valley WWTP can be similar to that of the landfill working face when sludges are received and managed.

g. City of Lincoln WWTP

The City of Lincoln owns and operates a regional wastewater treatment facility located approximately 1.5 miles north of the WPWMA's facility. The 5.9 million gallon per day facility serves areas between Lincoln and North Auburn. Sludge from Lincoln's WWTP is currently disposed at either the WRSL or the Ostrom Road Landfill in Yuba County. Odors from Lincoln's WWTP can be similar to that of the landfill working face when sludges are received and managed.

h. City of Roseville WWTP

The City of Roseville owns and operates two wastewater treatment facilities.

The Dry Creek facility is located approximately 6.5 miles south southeast of the WPWMA's facility. Materials generated at the Dry Creek facility are currently suitable for land application and are not delivered to the WPWMA's facility.

The Pleasant Grove facility is located approximately 3.5 miles southwest of the WPWMA's facility. Materials from the Pleasant Grove facility are hauled by the City of Roseville to the WRSL for disposal and have the potential for odor generation during transport. To reduce the odors associated with transport of the materials from the WWTP to the WPWMA's facility, the City of Roseville began using covered hauling containers in 2013. This practice substantially reduced the odors associated with sludge transport.

Odors from the Roseville WWTPs can be similar to that of the landfill working face when sludges are received and managed.

ii. Ag (exempt from PCAPCD nuisance regulations)

a. Poultry Farm

A privately-owned poultry farm consisting of twelve (12) enclosed barn structures is located approximately 1-mile northwest of the WPWMA's facility. Odors from the facility tend to have a musty odor mixed with ammonia and can be similar to composting and landfill related odors.

b. Dairy Farm

An approximately 20-acre, privately-owned dairy farm that includes eight (8) open-sided barns/structures and associated feed lots is located approximately 3 miles northwest of the WPWMA's facility. Odors from the facility tend to have a manure odor mixed with ammonia and can be similar to landfill and landfill gas-related odors.

8. ON-SITE ODOR SOURCES, OPERATIONAL PLANNING AND BMPS

The following provides an overview of the primary odor-generating operations at the WPWMA's facility (MRF, compost, landfill, and LFG) and the BMPs implemented by the WPWMA to reduce the potential for odors to be noticeable off-site including the advance planning and scheduling of operational activities. A checklist template is included in Appendix A that the WPWMA will utilize to document implementation and adherence to the observable BMPs. While this list

may not represent all the potential odor producing operations at the WPWMA's facility, based on previous site-specific studies conducted by the WPWMA, the following represents the operations with the greatest potential to produce odors.

A. Overview of On-Site Odor Sources

A November 2015 odor study commissioned by the WPWMA and produced by Environmental Management Consulting and Charles E. Schmidt, PhD (Appendix B) suggests the following relationship (see Figure 8-1) in terms of the relative odor potential of the primary facility odor sources.

Figure 8.1: Overall Contribution to Site Odor by Process

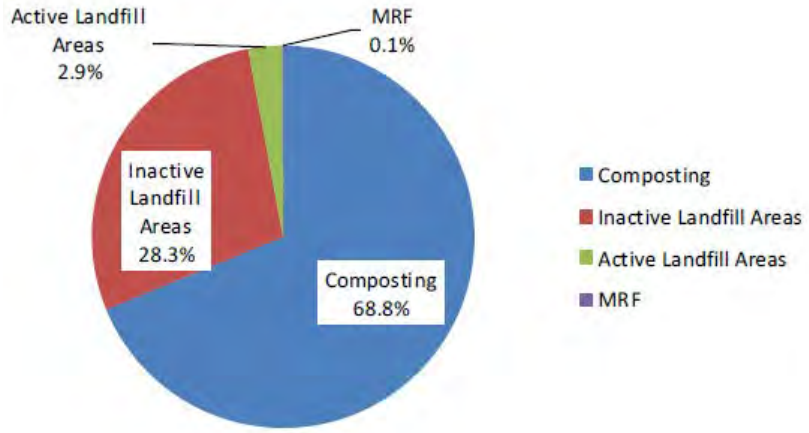

B. MRF

As used herein, the MRF represents the portion of the WPWMA's facility that receives and processes mixed municipal solid wastes for the purposes of recovering and marketing recyclable materials (Figure 8-2). Residual Wastes are transported to the WRSL for disposal.

Given the location of the MSW processing building relative to the WPWMA's overall facility, the potential for off-site odors associated with the MSW receiving and processing area is greatest along the sections of Athens Avenue and Fiddyment Road noted on Figure 8-2.

The materials processed at the MRF include organic materials and other putrescible wastes that have the potential to emit odors as they begin to decompose. Additionally, fines that are entrained within the mixed waste stream (including, but not limited to, dirt and grit, concrete and drywall dust, grass clippings, and small pieces of paper, wood, glass and plastic) are collected and used at the WRSL as an alternative daily cover (ADC) material. As a result, the following BMPs focus on timely and consistent processing of the materials and regular housekeeping and cleaning of facility to avoid the accumulation of potentially odiferous materials.

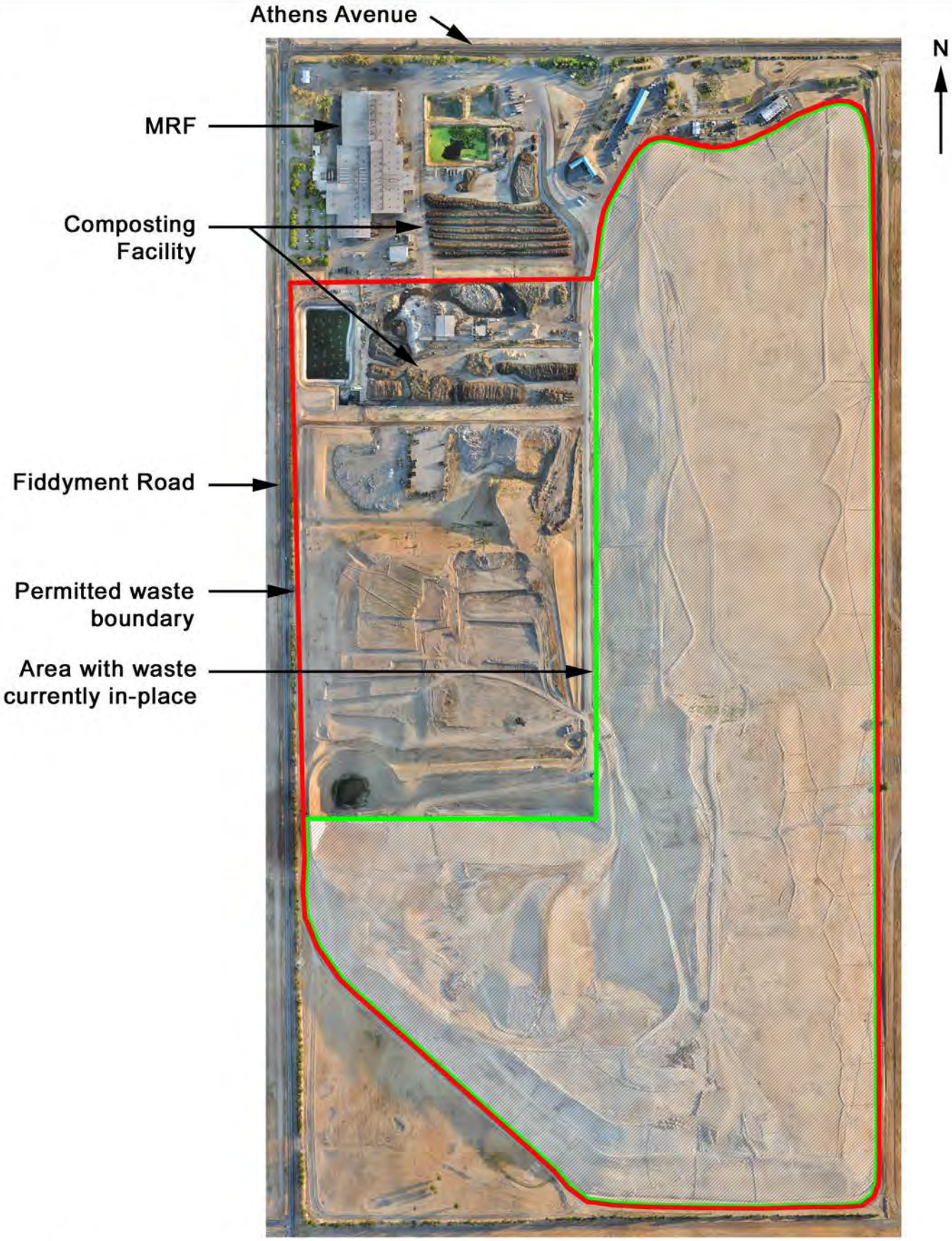

WPWMA Site-Wide Odor Plan
WPWMA Facility Site Layout

FIGURE 8-2

i. Best Management Practices

The following represents the odor minimization BMPs related to the MRF operation.

- Process waste materials within forty-eight (48) hours of receipt of the material. For the purposes of this BMP, "process" means to sort the materials to recover marketable commodities and transport the residue to the landfill for burial.
- ADC generated from MRF fines is screened to a ½-inch minus size thereby reducing the potential for larger pieces of foodwaste to be present in the fines. The MRF Operator is responsible for regularly inspecting and properly maintaining the ADC screening system to ensure this material sizing standard.
- Transport all ADC to the landfill the same day it is produced at the MRF. No overnight storage of ADC at the MRF is allowed.
- Transport residual wastes to the landfill the same day they are produced. Limit overnight storage or residue in trailers to situations in which the MRF is operated outside of the landfill waste acceptance hours.
- Continuously operate the stormwater pond aeration system to the degree: 1) the aerators are fully submerged and 2) the dissolved oxygen level in the pond is less than 1 milligram per liter.
- At the end of daily waste processing operations, remove all unprocessed waste material from the processing lines and equipment. No waste material shall remain on the processing lines and equipment overnight. This provision shall not apply to any processing lines that have experienced a mechanical or electrical failure that precludes the MRF Operator from running the line. In these cases, the MRF Operator shall clear the line(s) of material upon repair of the line(s).
- Remove waste materials from the floors and other surfaces underneath MRF processing equipment following the completion of daily processing operations and return the collected materials to the receiving floor for reprocessing.
- Remove waste materials from the baling areas and recovered product storage floor and return the collected waste materials to the receiving floor following the completion of daily baling operations. Recovered recyclables which have not yet been baled are exempted from this cleaning and removal requirement.

- Remove loose waste and debris around the residue and ADC load-out conveyors at the end of daily operations.
- Close at least two (2) of the three (3) MRF receiving floor roll-up doors each night. The MRF Operator may elect to keep one door open to facilitate ease of inspection of the receiving floor for the purposes of maintaining site security and safety.
- Using a street sweeper or equivalent piece of equipment, sweep the asphalt covered areas surrounding the MRF building daily.
- To minimize system downtime, provide equipment maintenance and repair staff whenever the MRF is processing wastes to respond to and repair system faults and equipment breakdowns.
- Conduct daily preventative maintenance activities to minimize system downtime.
- On a quarterly basis, perform routine maintenance and inspection of the MRF air handling system components to ensure proper and uninterrupted operation.

C. Composting Facility

As used herein, the Composting Facility represents the portion of the WPWMA's facility that receives and processes organic materials for the purposes of producing a marketable soil amendment (Figure 8-2). The following provides additional information related to the operation of the Composting Facility as it relates to odors.

A majority of the materials received and processed at the Composting Facility consist of greenwaste (e.g.: grass, leaves, plants, sticks and small branches). With passage of recent regulations by the State of California (i.e. AB 32, AB 1826, SB 1383), foodwaste and other organic materials such as paper waste will need to be co-composted with greenwaste.

Greenwaste and foodwaste are received directly at the Composting Facility. Other organic materials that may be composted will generally be received as part of the MSW stream at the MRF recovered by the MRF Operator, and subsequently transported to the Composting Facility.

As received, greenwaste generally has a relatively low odor potential as sufficient oxygen is available to prevent significant anaerobic conditions. However, during certain parts of the year (typically early Spring) when there may be alternating cycles of warm weather followed by rain, the amount of grass clippings generated within the county and subsequently received at the WPWMA's facility can increase dramatically. In some cases, the greenwaste can already enter a semi-anaerobic phase (and begin producing odors) before being collected and transported to the WPWMA facility. In these cases, extra care must be taken to process

these materials as soon as practical and introduce them to the composting process to reestablish aerobic conditions.

Foodwaste will most often exhibit a high odor potential upon receipt at the Composting Facility. As such, prompt processing and blending of these materials (as noted in the BMP section below) with processed, shredded greenwaste will help to minimize the odor potential of the foodwaste materials.

The WPWMA utilizes a windrow composting method to process a majority of the greenwaste materials received at the Composting Facility. Windrow composting methods are not approved for use at the WPWMA's site for composting foodwaste, paper waste or any other non-greenwaste materials. The windrow composting method consists of placing ground (shredded) greenwaste in long rows. After placement, the windrows are periodically watered and mechanically turned to ensure sufficient oxygen is available to maintain aerobic conditions within the pile. The act of turning the compost has the potential to release compost-related odors, however failure to turn the compost would lead to anaerobic conditions and have a greater potential for the release of offensive odors.

In response to the regulatory changes noted above, the WPWMA is utilizing aerated static pile (ASP) composting methods (on a pilot test scale[2]) to compost a blend of green and non-green (e.g. food, paper, etc.) organic materials. ASP composting methods involve blending shredded greenwaste with non-green materials and placing the blended material into piles situated above a series of perforated pipes. The pipes are connected to one or more blowers (mechanical air moving systems) that allow air to be drawn from the atmosphere and pushed through the material pile to maintain aerobic conditions. A layer of finished compost is placed on top of the piles to act as a biofilter; this biofilter layer serves to absorb and biologically degrade odorous compounds. Unlike the windrowing method, the materials in the ASP system are not turned or otherwise moved after initial placement and are left in a "static" state until the composting process is effectively completed.

All liquids that contact the compostable materials are directed to one of two on-site composting ponds. Unlike other stormwater ponds located on-site that are designed to collect rainwater and other on-site water that has not come into contact with waste materials and allow any solids to settle before the water is released off-site, compost ponds are designed to preclude any off-site release of liquids that have come into contact with compostable materials. The water collected in the compost ponds can be reapplied to the compost piles to maintain appropriate moisture levels are evaporate to the atmosphere.

[2] The WPWMA anticipates submitting an application to the LEA to fully permit the ASP composting process by July 2020.

The November 2015 odor study commissioned by the WPWMA suggests that the composting operation has the greatest potential for odors and represents nearly 69% of the total site wide odor potential. At the time the study was performed, the WPWMA had not begun its ASP composting pilot testing. In addition to the operational benefits associated with ASP composting methods, the use of ASP has been demonstrated to reduce odor emissions by at least 80% compared to conventional windrow methods.[2,3]

After materials have completed the active composting phase[4], the compost is moved to a separate area to cure before it is ready to be screened and then marketed. During the movement from active composting to curing, the material has some potential to release odors. However, as shown on Figure 8.3 below (source: Figure 5.1 in Appendix B), the odor potential associated with composting operations decreases rapidly and remains relatively low after the first few weeks of the active composting process (windrowing or ASP).

Figure 8.3: Compost Emission Curve

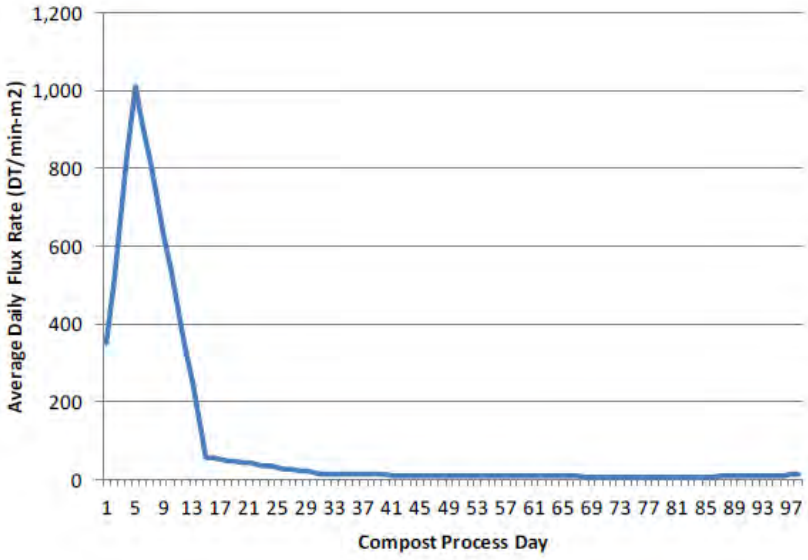

Once cured, the compost is screened to remove contaminants and is then ready for market. Similar to the when the compost is moved from the active to the curing phase, screening of the compost has the potential to release a minor amount of odor

California Code of Regulations Title 14 Section 17863.4 requires that all compostable material handling operations and facilities prepare and maintain a site-specific Odor Impact Minimization Plan (OIMP). The WPWMA's OIMP (Appendix C) provides detailed information regarding design and operating procedures to minimize composting-related odors.

i. Best Management Practices

The following represents the odor minimization BMPs related to the composting operation. As noted above, the highest potential for odors exist during receipt and initial processing of the materials and during the first few weeks of the active composting process. As such, the following BMPs primarily focus on management practices during these initial periods as well as general housekeeping practices.

It is acknowledged that the use of ASP composting methods is still in a pilot testing phase and that any or all of the following provisions are subject to change in the future.

- Comply with all provisions of the approved OIMP in Appendix C.
- Plan and perform material grinding, turning, screening or blending of non-greenwaste materials with ground greenwaste materials consistent with the provisions of Section 8F.
- Perform initial processing (grinding) of green materials within seven (7) calendar days of receipt.
- Grind highly odiferous loads of greenwaste within forty-eight (48) hours of receipt.
- Introduce ground greenwaste into the windrowing or ASP piles within fourteen (14) calendar days of the grinding of the materials.
- Cover foodwaste, paper and/or other compostable materials with ground greenwaste so that no non-greenwaste materials are exposed within two (2) hours of receipt of the foodwaste, paper and/or other compostable materials.
- Move the blended materials to ASP and begin introducing air (as noted below) within seven (7) calendar days of the initial receipt of the foodwaste, paper and/or other compostable materials.
- Limit windrow composting methods to the composting of greenwaste only unless otherwise approved, in writing, by the LEA. All other materials shall be composted using ASP methods.
- Construct and maintain a minimum 12-inch thick biofilter layer comprised of finished, unscreened compost over the entire surface of the ASP compost piles. Biofilter material shall be placed within twenty-four (24) hours of any section of the ASP reaching its maximum height. Based on current material flowrates, it can take between 1 to 3 operational days to fully

construct a new section of ASP with placement of the biofilter layer to follow.

- Introduce ambient air, via a mechanical air supply system, as necessary to generally maintain pile temperatures within the range of 131°F to 168°F. Blowers will be operated on a continuous intermittent schedule (e.g. 5 minutes on, 10 minutes off, etc.) to maintain the appropriate temperature range of the compost piles as noted herein. Blowers shall be used to push ambient air through the piles (positive aeration).
- Maintain materials in the composting windrows for at least eight (8) weeks or in the ASP piles for at least forty-five (45) days as applicable.
- Following the active composting timeframes noted above, maintain the composted materials in a curing pile for at least fifty (50) days prior to final screening of the material.
- Wash down and remove any accumulated liquids, solids and semi-solids that may have leached from the active ASP piles at least once per day.
- Continuously operate the compost pond aeration system to the degree: 1) the aerators are fully submerged and 2) the dissolved oxygen level in the pond is less than 1 milligram per liter.
- Utilize a dedicated continuous dissolved oxygen meter to monitor oxygen levels in the compost ponds.
- On a quarterly basis, sample the compost leachate for the following parameters: pH, dissolved oxygen, total dissolved solids, fixed dissolved solids, total nitrogen and specific conductance.
- Clean and remove sediments from the south composting pond forebay and the north compost pad drainage channel at least quarterly with the first scheduled cleaning to occur by December 31, 2020. Collected sediments shall be promptly mixed with ground greenwaste and reintroduced to the active composting system or immediately transported to the WRSL for disposal and managed in the same method as wastewater treatment plant sludges. In no event shall the collected sediments be allowed to stored overnight without first being mixed or covered with ground greenwaste.
- Clean and remove accumulated compost or other debris on and adjacent to the composting pads semi-annually.

- Drain and clean all membrane-lined composting ponds at least once every four (4) years with the first scheduled cleaning to occur by December 31, 2022.

D. Landfill

As used herein, the "Landfill represents the portion of the WPWMA's facility referred to as the Western Regional Sanitary Landfill (WRSL). The WRSL is approximately 291 acres with approximately 231 acres permitted for disposal activities (Figure 8-2). As of June 2019, approximately 158 acres have received waste for disposal with the remainder identified as future landfill. Based on the currently permitted capacity of the WRSL and current and projected future filling rates, the WPWMA estimates the WRSL has sufficient capacity to operate until at least 2058.

It is the WPWMA's intent to recover and market for recycling or reuse as much material as is technically and economically practical and that is environmentally safe to do so. Wastes received at the WPWMA's facility that cannot be reasonably recovered for recycling or reuse are disposed of at the WRSL.

When the WRSL is not in operation (i.e. not actively receiving waste materials for burial), all in-place wastes are covered by soil or approved alternative daily cover (ADC). This cover serves to reduce the potential for windblown litter, vectors and odors. At the start of daily filling operations, the Landfill Operator establishes one or more daily active working faces where wastes will be disposed. The daily active working face represents the only area(s) at the WRSL where wastes are exposed. On an average day the size of the active working face is generally limited to less than one (1) acre to minimize issues associated with the exposed waste including the potential for odors. At the conclusion of each operating day, the Landfill Operator places a layer of daily cover materials (soil or ADC) over the active working face to completely cover all wastes.

The two primary sources of odor associated with the landfill are: 1) the receipt and burial of wastes and 2) landfill gas related odors. The following section addresses BMPs for minimizing odors related to the receipt and burial of materials; landfill gas related BMPs are addressed separately in Section 8E.

i. Best Management Practices

The following represents the odor minimization BMPs related to the landfilling operation.

- Discuss at the weekly landfill operations meeting, the planned location of each day's filling operations and when areas of

previously buried waste that have been in place for a week or longer will need to be exposed for the purposes of establishing the daily active working face. The planned efforts will be consistent with the provisions of Section 8F.

- Provide at least twenty-four (24) hours' notice (or as soon as practical in the event of an unforeseen circumstance that would result in less than 24 hours' notice) to the WPWMA Program Manager or Senior Civil Engineer of the need to operate the WRSL on weekends, Observed Holidays or outside WPWMA facility Gate Hours.
- Minimize the size of the working face to that necessary to maintain operator and customer safety. A working face between ¼ and ½ acre is considered the minimum safe size with the maximum size of the working face generally limited to one (1) acre.
- Minimize the open-air exposure time of wastes by placing newer wastes over older wastes throughout the operating day. A study commissioned by the WPWMA suggests that odors associated with exposed waste increase over the course of the operating day.[5]
- Bury wastewater treatment plant sludges and other highly odiferous loads immediately upon receipt by covering the materials as quickly as possible with less odiferous wastes.
- When exposing areas of previously buried waste that have been in place for a week or longer, limit the time between removal of the last six (6) inches of soil cover and first placement of additional wastes to no more than one (1) hour.
- Begin placing daily cover materials immediately following receipt of the last load of waste and consistent with the requirements of Title 27, Sections 20680 and 20690 of the California Code of Regulations. Complete daily cover placement within four (4) hours of receipt of the last load of waste.
- Utilize soil or "fines" recovered from the MRF or C&D operation as an ADC as follows:
    - A six-inch minimum layer of on-site, native soil; OR
    - A six-inch layer of MRF fines covered by a six-inch layer of on-site, native soil; OR
    - A six-inch layer of MRF fines covered by a six-inch layer of C&D fines.
    - Restrict use of ADC fines to areas that will receive additional fill within twenty-four (24) hours. Exposure of alternative

daily cover fines in excess of twenty-four (24) hours is prohibited.

- Daily cover shall be compacted to minimize odor transmission. The minimum level of compaction may be achieved via track-walking the materials with a Caterpillar D-6 low ground pressure dozer or equivalent.

- Daily cover soil may be removed at the start of the operational filling day to minimize overall soil disposal rates; MRF fines and dried sewage sludge used as ADC shall not be removed and shall remain in-place once applied by the Landfill Operator.
- Submit a fill plan to the WPWMA for review and approval each month detailing the following information:
  - Subsequent forty-five (45) days of fill operations.
  - Subsequent one hundred eighty (180)-day fill area.
  - Landfill cover plan indicating areas containing intermediate cover and areas that will have intermediate cover within the subsequent one hundred eighty 180-day period.
  - Areas where surface LFG conveyance piping is currently located that the Landfill Operator believes will need to be relocated to accommodate the filling operations noted above.

  Provide five (5) days written notice to the WPWMA prior to deviating from the fill plan except in the case where the Landfill Operator believes surface LFG conveyance piping needs to be disconnected or relocated. Provide thirty (30) days written notice to the WPWMA regarding any need to relocate or disconnect LFG piping. WPWMA will provide to the PCAPCD within three (3) business days of receipt, a copy of any such thirty (30) day written notice regarding the need to relocate or disconnect LFG piping.
- WPWMA will maintain reasonably accurate as-built drawings, in AutoCAD format, of all surface and sub-surface GCCS infrastructure and will provide such information to the Landfill Operator.
- Place and compact a minimum of twelve (12) inches of intermediate soil cover over areas where landfilling operations will not occur for one hundred eighty (180) days or more consistent with the regulatory requirements identified in Title 27, Section 20700 of the California Code of Regulations. The depth of any previously placed soil daily cover shall apply towards the intermediate soil depth requirement. The minimum level of

compaction may be achieved via track-walking the intermediate cover soils materials with a Caterpillar D-8 dozer or equivalent.

E. Landfill Gas

Landfill gas (LFG) is the byproduct of the anaerobic decomposition of wastes. As such, the composition of the waste being landfilled can have a direct impact on the generation rate and chemical constituency of the landfill gas.

Only the organic fraction of the landfilled waste will decompose and produce LFG. The generation rate of LFG generally increases over time with development of the landfill and usually peaks shortly after the landfill has reached final capacity. However, as a result of the state's mandate to reduce the amount of organic materials landfilled over time, it is reasonable to conclude that the quantity of LFG per unit volume of disposed waste may decline also over time.

LFG is composed predominately of equal parts methane and carbon dioxide; both odorless gases. LFG also includes trace amounts of volatile organic compounds (VOCs), sulfur-based compounds and ammonia. It is generally the sulfur-based compounds and ammonia that result in LFG related odors.

Federal and state law require that landfills that have the potential to produce a certain amount of LFG install a GCCS. The WRSL meets these criteria; in 1996 the WPWMA installed LFG collection wells and a flare system to destroy the LFG via combustion. Overtime as the WRSL has continued to develop, the WPWMA has expanded, modified and upgraded its GCCS. The current GCCS includes a series of collection wells that remove the LFG from the waste mass (via an applied vacuum) and conveys the LFG in an enclosed piping system to a central location (blower/flare station) where the LFG is either directed to the on-site Energy Developer to produce electricity or to an enclosed ground flare where it is destroyed through high-temperature combustion.

The design and operation of LFG systems is prescribed in both federal and state law. The U.S. EPA established New Source Performance Standards/Emission Guidelines[6] for municipal solid waste landfills intended to reduce uncontrolled emissions of LFG and regulate release to the atmosphere of non-methane organic compounds entrained in LFG (40 CFR Part 60 Subpart WWW). The California Air Resources Board also approved a regulation intended to reduce emissions of methane gas from landfills.[7] While both regulations are intended to reduce methane emissions to the atmosphere, compliance with the regulations also serves to reduce the potential for LFG-related odors.

The WPWMA's GCCS operations and maintenance consultant developed and follows standard operating procedures to ensure the LFG system is

operated in compliance with the applicable regulations. These standard operating procedures are included in Appendix F.

i. Best Management Practices

The following represents the odor minimization BMPs related to operation of the LFG collection and control system. For the purposes of this section, these BMPs shall apply to all facility operators, contractors and consultants that have the potential to impact the operation of the LFG system. This includes, but is not limited to, the 1) the WPWMA's operations and maintenance consultant, 2) any third-party construction contractors that are hired to work on any part of the LFG system or the WRSL that would require a shutdown of the LFG system for any reason, 3) the Landfill Operator to the degree their operations require a shutdown of the LFG system for any reason, and 4) the Energy Developer. While not every BMP identified below will apply to every entity that has the potential to impact the operation of the LFG system, all entities should adhere to the appropriate BMPs to limit the potential for a disruption to the operation of the LFG system.

- Comply with all provisions of the approved standard operating procedures in Appendix F.
- Comply with the provisions of 40 CFR Part 60 Subpart WWW and Title 17, CCR Section 95460, et seq.
- Maximize the recovery of LFG from the WRSL while minimizing the potential for subsurface combustion events and oxygen levels in excess of three percent (3%) by volume in the extracted LFG stream.
- Plan and perform all operations that have the potential to disrupt operations of the LFG collection and control system consistent with the provisions of Section 8F.
- Avoid operations that have the potential to disrupt LFG collection and control system operations on weekends, Observed Holidays, and outside of the WPWMA's Gate Hours.
- Where landfill operations require the temporary disconnection of landfill gas collection or conveyance equipment, coordinate with the WPWMA and Landfill Operator to minimize the potential for fugitive LFG emissions by:
    - Minimizing the number of LFG wells that must be temporarily taken off-line
    - Adjusting adjacent LFG wells in an attempt to capture LFG that would otherwise be captured by the wells that are to be disconnected

- Coordinate schedules with the Landfill Operator to reconnect the LFG as soon as it is safe and practical to do so.

- Although not required, the WPWMA will consider placing additional soil cover in excess of regulatory requirements identified in Title 27, Section 20700 of the California Code of Regulations or the use of cover membranes or other non- or low-permeable cover systems when odors associated with LFG surface emissions cannot be reasonably controlled through consistent implementation of the BMPs noted herein.

F. Planning and Scheduling Operational Activities

Each facility operator, contractor and consultant shall utilize the daily odor risk forecasting tool described in Section 10B to plan their respective operations. Where possible, operations that may result in noticeable off-site odors should be avoided during:

- Any continuous three (3) hour period where each hourly risk potential is noted as “HIGH”; or
- Any continuous six (6) hour period where each hourly risk potential is noted as “MODERATE” or “HIGH”.

Appendix D provides an example of these odor risk avoidance periods.

If a facility operator, contractor or consultant identifies that a specific operation or activity must occur to comply with operational needs or compliance with permits and that the timing of the identified activity will not comply with the aforementioned standards, the facility operator, contractor or consultant shall submit notification to the WPWMA, via reports@WPWMA.ca.gov, which includes the following information:

- Description of the activity or operation.
- Date(s) and time period(s) of the activity or operation.
- Reason why the activity or operation could not reasonably be delayed or rescheduled.
- Specific measures taken to reduce the potential for odors.

Any such notice must be submitted to the WPWMA within twenty-four (24) hours of initially conducting the activity or operation.

9. WEATHER & TOPOGRAPHY

The WPWMA’s facilities are located within the Sunset Area and immediately north of the Placer Ranch Specific Plan area. The following is an excerpt from the Draft Environmental Impact Report for the Sunset Area Plan/Placer Ranch Specific Plan[8].

[U]nincorporated land in west Placer County is part of the Sacramento Valley Air Basin (SVAB). The SVAB comprises the western portion of Placer County, the eastern portion of Solano County, and all of Shasta, Tehama, Glenn, Butte, Colusa, Sutter, Yuba, Yolo, and Sacramento Counties.

Ambient concentrations of air pollutants are determined by the amount of pollutants emitted and the atmosphere's ability to transport and dilute such emissions. Natural factors that affect transport and dilution include terrain, wind, atmospheric stability, and the presence of sunlight. Therefore, existing air quality conditions in the SVAB are determined by such natural factors as climate, meteorology, and topography, in addition to the level of emissions released by existing air pollutant sources. These factors are discussed separately below.

The SVAB is a relatively flat area bordered by the north Coast Ranges to the west and the northern Sierra Nevada to the east. Air flows into the SVAB through the Carquinez Strait, the only breach in the western mountain barrier, and moves across the Sacramento–San Joaquin Delta (Delta) from the San Francisco Bay Area.

The Mediterranean climate in the SVAB is characterized by hot, dry summers and cool, rainy winters. During the summer, daily temperatures range from 50 degrees Fahrenheit (°F) to more than 100°F. The average winter temperature is a moderate 49°F. The inland location and surrounding mountains shelter the area from much of the ocean breezes that keep the coastal regions moderate in temperature. Most precipitation in the area results from air masses that move in from the Pacific Ocean, usually from the west or northwest, during the winter months. The prevailing winds are moderate in speed and vary from moisture-laden breezes from the south to dry land flows from the north.

The mountains surrounding the SVAB create a barrier to airflow, which leads to the entrapment of air pollutants when meteorological conditions are unfavorable for transport and dilution. The highest frequency of poor-quality air movement occurs in the fall and winter when high-pressure cells are present over the SVAB. The lack of surface wind during these periods, combined with the reduced vertical flow caused by a decline in surface heating, reduces the influx of air and leads to the concentration of air pollutants under stable metrological conditions. Surface concentrations of air pollutant emissions are highest when these conditions occur in combination with agricultural burning activities or with temperature inversions, which hinder dispersion by creating a ceiling over the area and trapping air pollutants near the ground.

Elevated levels of ozone typically occur May through October in the SVAB. This period is characterized by poor air movement in the mornings with the arrival of the Delta breeze from the southwest in the afternoons. In addition, longer daylight hours provide ample sunlight to fuel photochemical reactions between reactive organic gases (ROG) and oxides of nitrogen (NOX), which

form ozone. Typically, the Delta breeze transports air pollutants northward out of the SVAB; however, a phenomenon known as the Schultz Eddy prevents this from occurring during approximately half of the time from July to September. The Schultz Eddy phenomenon causes the wind to shift southward and blow air pollutants back into the SVAB. This phenomenon exacerbates the concentration of air pollutant emissions in the area and contributes to the area violating the ambient-air quality standards.

The local meteorology of the project area and surrounding area is represented by measurements recorded at the Lincoln Regional Airport (Karl Harder Field) station. The National Oceanic and Atmospheric Administration's National Centers for Environmental Information has records for that station dating back to 2009. According to these data, the average annual precipitation in the project area is approximately 20 inches, January temperatures range from a normal minimum of 36°F to a normal maximum of 56°F, and July temperatures range from a normal minimum of 61°F to a normal maximum of 96°F. The predominant wind direction is from the southeast (NOAA 2018).

While the PCAPCD does not classify odors as air pollutants, the meteorological and topographical conditions that affect the concentration and dispersion of air pollutants generally apply to the localized concentration and dispersion of odors as well. As noted above, the area surrounding the WPWMA's facilities generally experiences moderate wind patterns and minimal air movement or temperature inversion conditions the majority of the year. These factors can result in poor dispersion of odors and result in a greater potential for WPWMA facility-related and other regional odors to be perceptible by nearby receptors regardless of facility operations or time of day.

10. ODOR MONITORING AND INVESTIGATIONS

The following provides an overview of the WPWMA's effort to estimate potential off-site dispersion of odors generated from its facility, solicit feedback from nearby receptors related to when they experience odors they believe are from the WPWMA's facility, and to investigate and monitor on-site and off-site odors. WPWMA staff responsible for conducting odor monitoring, investigations, operational evaluations and responses to the public, PCAPCD, LEA or other applicable agencies include the WPWMA's a) Program Manager, b) Senior Civil Engineer, c) Associate or Assistant Engineers, d) Environmental Resource Specialist(s) and e) Engineering Technician(s).

A. Odor Monitoring and Dispersion Modeling System

The WPWMA employs a site-wide continuous odor monitoring and dispersion modeling system and meteorological station. Data collected by onsite sensors along with static estimates of odor flux from select sources at the WPWMA's facility are combined with atmospheric data to produce air (odor) dispersion models using the CALPUFF[9] modeling system. Values for the static odor flux emissions were developed using a U.S.

EPA-approved flux chamber testing methodology as part of the WPWMA's 2015 Odor Study (Appendix B).

The odor monitoring and dispersion modeling system is utilized to provide objective, quantifiable, visual representations of the probable off-site odor concentrations over time associated with the WPWMA's operations.

B. Predictive Odor Risk Modeling

The WPWMA's odor monitoring and dispersion system includes a feature that uses weather forecast data to prepare a 3-day odor risk forecast that identifies periods of time (on an hourly basis) where there could be an increased potential for odors to be experienced off-site.

The odor risk forecast is updated daily and made available to the facility operators, contractors and consultants to help them better plan their operations and minimize the potential for off-site odors. Use of this forecasting tool is included as a BMP in Section 8. An example of the odor risk forecast is included in Appendix D.

The following criteria are used when determining the hourly odor risk assessment:

Risk Zone 1:

- If the forecast wind speed is lower than 1 meter per second (2.2 miles per hour), the risk is set to "HIGH"
- If the forecast wind speed is between 1 and 3 meters per second (2.2 to 6.7 miles per hour), the risk is set to "MODERATE"
- If the forecast wind speed is greater than 3 meters per second (6.7 miles per hour), the risk is set to "LOW"

Risk Zone 2:

- If the forecast wind speed is lower than 1 meter per second (2.2 miles per hour), the risk is set to "MODERATE"
- If the forecast wind speed is greater than 1 meter per second (6.7 miles per hour), the risk is set to "LOW"

Figure 10-1: High Odor Risk Wind Direction Zone

The WPWMA intends to use on- and off-site odor monitoring results to calibrate and verify the accuracy and efficacy of this odor risk tool and will adjust the aforementioned criteria, as necessary, to provide reasonable and realistic odor risk predictions for use by the WPWMA, its facility operators, contractors and consultants.

C. Routine On- and Off-site Odor Monitoring by WPWMA Staff

In addition to the odor investigation efforts by WPWMA staff as noted in Section 10E below, the WPWMA conducts periodic on- and off-site odor monitoring to record the type and intensity of odors that have the potential to be experienced by nearby receptors. Figure 10-2 identifies the off-site odor monitoring locations.

On- and off-site monitoring is performed weekly and at times when odors are expected to be the most noticeable. Based on historical odor notification records received by the WPWMA, odors are most commonly reported as being experienced between the hours of 6 am and 9 am and between 5 pm and 8 pm. As a result, routine on- and off-site monitoring will most commonly be performed during the 6 am to 9 am time window. At each observation location, WPWMA staff record: 1) time, 2) noticeable odors and their description and intensity (on a scale of 1 to 5 with 5 being the most intense), and 3) specific observations about on-site facility operating conditions or off-site conditions (e.g. if it is trash collection day in the area, construction activities, surrounding land use conditions, etc.) that could be contributing to perceived odors. A template for the inspection report is included in Appendix E.

Upon return to the office, WPWMA staff will review and make a qualitative assessment of odor dispersion estimates from the WPWMA's dispersion modeling system corresponding to the recorded time of field observations, and a brief statement of how well these conditions matched with observed field conditions.

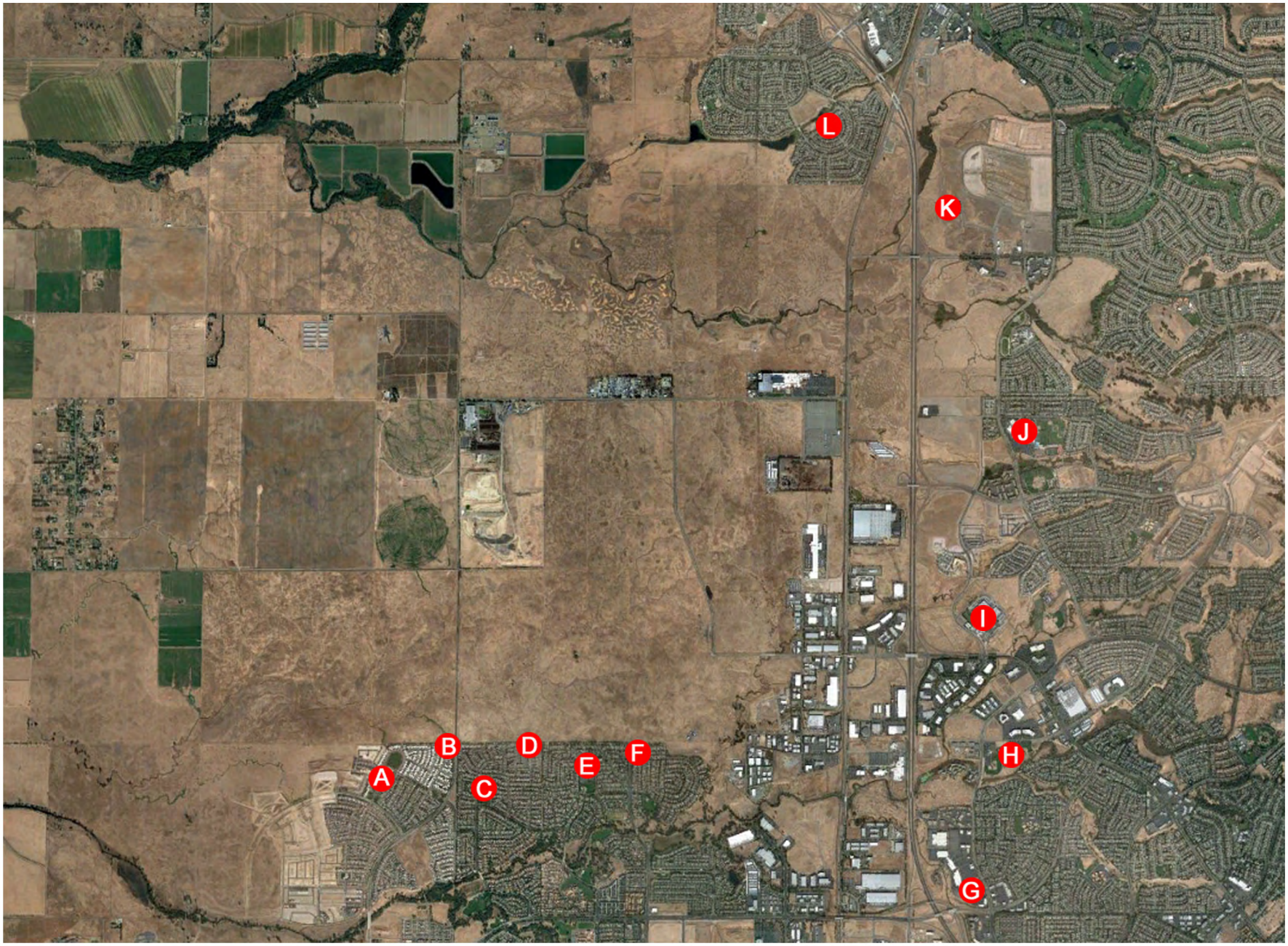

WPWMA Site-Wide Odor Plan
Routine Offf-Site Odor Monitoring Locations

FIGURE
10-2

In the event that specific areas of the WPWMA's operations are noted as emitting higher than average odors, WPWMA staff meet and confer with its applicable facility operators, contractors or consultants to identify and document immediate mitigation measures that can be implemented by the applicable entity to reduce the potential for off-site odors.

D. Odor Notification System

The WPWMA utilizes an online odor notification system (using SurveyMonkey.com as the platform) that allows individuals who experience an odor to report it directly to the WPWMA. A link to the online notification system is prominently displayed on the WPWMA's website (www.WPWMA.ca.gov).

The online notification system provides users the ability to report the following information to the WPWMA:

1. Date and time the odor was first experienced
2. Duration of the odor
3. A description and relative intensity of the odor
4. The location where the odor was experienced
5. Individual's contact information (optional)
6. Any other comments pertinent to the notification (optional)

When an person files an odor notification with the WPWMA, an email summarizing the data noted above is automatically generated (using www.Zapier.com) and emailed to WPWMA and PCAPCD personnel. Additionally, select WPWMA staff (Program Manager, Environmental Resources Specialist and Engineering Technician) receive a text message (also generated by www.Zapier.com) that summarize the notification. Zapier's algorithm monitors the Survey Monkey website and sends the email and text alerts within fifteen (15) minutes of the notification being filed.

E. Odor Notification Investigation Protocol

It is the goal of the WPWMA to conduct a field investigation in the reported area for as many of odor notifications as the WPWMA deems practical.

When the WPWMA receives an odor notification via its website or from the PCAPCD, the following criteria will be used to determine if a field investigation will be conducted:

1. Was the odor notification filed in a timely manner and is it reasonable to conclude the reported odor conditions are still applicable? Unless the notification would suggest otherwise, field investigations will only be performed when odors are reported within two (2) hours of being experienced.

2. Is the identified location of the odor proximate enough to the WPWMA's facilities to suggest the WPWMA's operations could be a contributing source of the reported odors? Based on historical data, the WPWMA considers any notifications outside of a five (5) mile radius measured from the center of its facility to not be sufficiently proximate to warrant a field investigation. Figure 10-3 represents the area in which field odor investigations will generally be conducted.
3. A field investigation will not be conducted for notifications received outside of normal business hours (8 am to 5 pm, Monday through Friday) or on WPWMA Observed Holidays unless specifically directed by the WPWMA Board of Directors or WPWMA Executive Management or as noted below.
    - If five (5) or more independent notifications are received within a one (1) hour period and when:
        - the notifications are clustered within a ¼-mile radius of one another
        - the odors are reported within one (1) hour of being experienced
        - the reported odor intensities are equal to or greater than 4
        - the notifications include the individual's name, phone number and email contact information
4. A field investigation will not be conducted if conditions could put WPWMA staff in physical danger (e.g. during thunderstorms, heavy rains, extreme heat, etc.) or would necessitate WPWMA staff to trespass on private property or other clearly marked non-accessible areas.
5. A field investigation will not be conducted if insufficient staff is available to conduct the investigation or other business needs of the WPWMA are determined by WPWMA's management (Program Manager or above) to be or greater immediate importance to facility operations, the environment, or public health than performing the investigation.

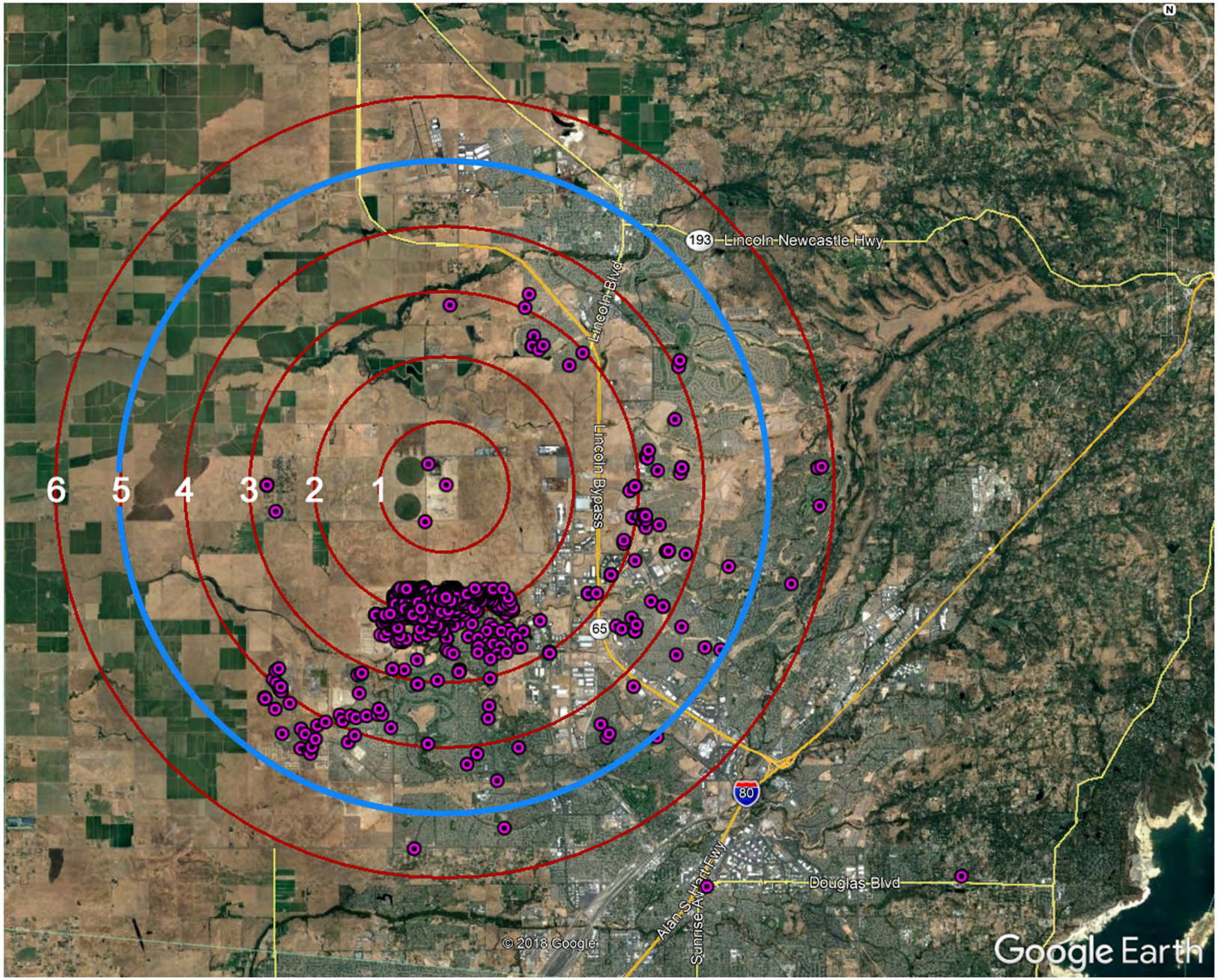

CELEBRATING OVER 40 YEARS OF SERVICE
WPWMA
EST. 1978

WPWMA Site-Wide Odor Plan
Location of Odor Notifications and 5-Mile Investigation Zone

FIGURE
10-3

If, based on the above criteria, a field odor investigation is warranted, one or more WPWMA staff will perform the investigation in accordance with the following protocol:

1. Identify where the reported location is relative to the WPWMA's facility.
2. Check the WPWMA's facility weather station and observe the surrounding environment to ascertain general wind speed and direction and any other relevant atmospheric conditions.
3. If leaving from the WPWMA offices, wear a safety vest with WPWMA logo, Placer County-issued or other form of photo identification, and WPWMA business cards. If possible and practical, use a WPWMA vehicle. Proceed to the reported address noting any presence of odors between the WPWMA's facility and the subject address. Note the exact time of arrival at the subject location.
4. If safe, walk around the vicinity of the reported address and record any noticeable odors. To the degree possible, document a description of the odor(s) and rank the intensity on a scale of 1 to 5 with 5 being the most intense. If no odors were detected, record as "No odor detected".
5. If members of the public are noted outdoors in the vicinity of the subject address (e.g. at a park, gas station, outside their residence, etc.), inquire if they smell (or smelled) anything recently that would corroborate the notification. Identify and explain who you are and what you are doing. Ask open ended, non-leading questions to not inadvertently bias responses.
6. Prior to leaving the area, note the exact time of departure. If returning the WPWMA's facility, attempt to follow a route that is directly downwind of the facility (and upwind of the reported location) noting any change in odor and intensity.
7. If any of the odors noted during the field investigation are reasonably identifiable as potentially emanating from the WPWMA's facility, conduct a brief facility inspection of the suspect operations to identify any factors that may have resulted in an increased release of odors (e.g. compost turning and grinding operations, recent receipt of highly odiferous loads, GCCS shutdown, etc.)
8. To the degree possible, document the findings within 24 hours using the Investigation Summary Report form included as Appendix E.

F. Odor Notification Investigation Report Procedures

The following summarizes the procedures the WPWMA follows for preparing and issuing an odor notification investigation report:

1. Prepare and download a video clip from the WPWMA's odor monitoring and dispersion modeling system that displays the estimated odor dispersion plume relative to the location identified in the odor notification. Depending on conditions and other proximate (time and location) odor notifications, prepare the video clip to begin approximately 30 minutes to 1 hour prior to the earliest time the odor was reported as first being experienced and approximately 1 hour after the latest time the odors were experienced.
2. Download the relevant information from the Odor Notification System and the Odor Monitoring and Dispersion Modeling System for incorporation into the investigation report template shown in Exhibit D.
3. Identify and select the nearest upwind, pre-defined modeling location for the purposes of identifying and recording site and time-specific odor intensity estimates for inclusion in the report template.
4. Add a summary of the onsite investigation (if any) to the report template.
5. Email the completed report template and video clip to the individual who reported the odor (if an email was provided) and to the PCAPCD.

G. Operational Review, Analysis and Adjustment

If, as a result of on-site or off-site odor monitoring (including odor notification field investigations), WPWMA staff are able to reasonably identify one or more of its facility operations as being a contributor to the documented odors, WPWMA staff will meet and confer with its applicable facility operator(s), contractors or consultants to identify factors that may have resulted in an increased release of odors.

As part of this discussion, WPWMA staff and the applicable facility operator(s), contractors, or consultants will work to determine if any of the identified BMPs were not met which, if implemented, may have reduced the potential for the odor to noticeable off-site.

If it is determined that an identified BMP was not followed, the WPWMA will submit a Non-Compliance Event Form to the PCAPCD and WPWMA staff or the applicable facility operator(s), contractors or consultants will provide the necessary follow-up and training of operational staff to ensure the BMPs are adhered to.

If it is determined that the identified BMPs were followed but were insufficient on ten (10) or more occasions within a one-year period,

changes to the applicable facility operation(s) may be implemented (to the degree they are technically and economically feasible and fully comply with all applicable laws and operating permit conditions) which could include, but not necessarily be limited to, the following:

1. Identify additional BMPs, including investigation or identification of emerging technologies or innovative practices, and update the SWOP as appropriate;
2. Reduce the frequency of the operational practice to the degree practical while continuing to maintain regulatory compliance with all other material throughput requirements and to maintain customer and facility operator safety;
3. Provide information to neighbors (via the WPWMA's website) regarding operational practices or facility construction activities that have the potential for increased odors and an estimate of the possible duration of the applicable operational practice or construction project.

H. Odor Monitoring and Investigation Document Retention Policy

All information collected or produced under this section, including but not limited to, routine on- and off-site odor investigation findings and reports, odor notification information received by the WPWMA via its online odor notification system, odor notification investigation reports and findings related to any necessary operational review and adjustment will be kept in electronic format for at least three (3) years and will be available for review upon request.

11. PUBLIC EDUCATION & OUTREACH

The WPWMA continues to engage with local residents to help educate and inform them about the critical function the WPWMA plays in managing solid wastes generated in Placer County in an environmentally secure and financially stable manner while meeting federal and state regulations related to solid waste management.

At the appropriate time and venue, the WPWMA is also able to provide information about facility and non-WPWMA odors sources, efforts by the WPWMA to reduce odors at its facility, mechanisms for the public to report odors they experience directly to the WPWMA, and the procedures the WPWMA uses to investigate and follow-up on reported odors.

Opportunities to engage the public regarding odors include, but are not necessarily limited to, the following:

A. Annual Meetings

Beginning in 2011, the WPWMA has conducted an annual public meeting at its facility designed to specifically engage nearby residents who have the potential to experience odors associated with operation of the WPWMA's facility. These meetings have typically focused on the

WPWMA providing information about its operations, why odors from these operations may be experienced by nearby residents and specific efforts the WPWMA has taken to monitor, measure and reduce odors associated with its operation. The meetings also serve to provide an open forum for residents to engage directly with WPWMA staff.

Subject to the limitations noted in Section 14 of this SWOP, the WPWMA intends to continue conducting these meetings in the future to the degree the public finds them helpful and informative.

B. Website

The WPWMA will post and maintain an up to date version of this SWOP on its website. Information from the annual meetings noted above will also be posted and maintained on the WPWMA website.

To provide timely, useful information to the public and the PCAPCD regarding potential odor events, the WPWMA will investigate developing an area on its website devoted to identifying current operational factors (e.g.: anticipated GCCS downtime for maintenance or construction, after hours or weekend operation of the WRSL, significant short-term variations in the waste received that could result in excessive odors, etc.) that could lead to the increased perception of off-site odors.

C. National Night Out Event

When possible, and when invited by the sponsoring neighborhoods, WPWMA staff will attend National Night Out events at proximate neighborhoods to provide information about the WPWMA's facility and answer questions about odors and how they can be reported to the WPWMA and the PCAPCD.

D. Coordination with Neighborhood and Homeowner Associations

The WPWMA will contact each of the neighborhood or homeowner associations in Lincoln, Rocklin and Roseville that are located within five (5) miles of the WPWMA's facility for the purposes of establishing a consistent method of communicating with these communities regarding facility odor issues. The WPWMA will suggest that each interested association appoint a representative that will serve as the primary contact for communications with the WPWMA. The emphasis of these communications will be to inform the public about the critical public service the WPWMA provides, how and why odors from the operation may be experienced, how to report odors to the WPWMA, and any known operations or projects by the WPWMA that may result in increases to notable odors.

As a part of these (and other appropriate outreach venues), WPWMA will provide information on how to report odors to the WPWMA via its on-line odor notification system.

12. REVIEW OF ODOR CONTROL TECHNOLOGIES

WPWMA staff will regularly monitor the solid waste industry, including active participation in the Solid Waste Association of North America trade group, to identify, evaluate and consider implementation of new odor control technologies or operating methodologies and will report and/or recommend implementation of the identified technologies or methodologies to its Board of Directors at a regularly scheduled meeting.

13. REPORTING AND RECORDKEEPING

All records and reports prepared or received in accordance with the provisions of this SWOP will be maintained by the WPWMA for a period of three (3) years and will be made available for review by the public in accordance with applicable law.

14. WPWMA BOARD APPROVAL PROCESS AND AVAILABILITY OF FUNDING

Any and all actions noted in this SWOP are subject to the approval by the Western Placer Waste Management Authority Board of Directors, including but not limited to the annual allocation of financial resources to cover the cost of all equipment and labor necessary to perform these actions and the need to comply with all current and future regulatory mandates.

REFERENCES

[1] Placer County Department of Public Works. (1977). *Southwestern Placer County Regional Sanitary Landfill Environmental Impact Report*, (State Clearinghouse #77121995). Page 6

[2] Environmental Management Consulting/C.E. Schmidt, PhD, *WPWMA Odor Assessment* (2015)

[3] T.R. Card and C.E. Schmidt (2012, March 14) *Air Emissions Control for Composting Operations*. Retrieved from https://www.biocycle.net

[4] As defined in California Code of Regulations Title 14, Division 7, Chapter 3.1

[5] Environmental Management Consulting/C.E. Schmidt, PhD, *Landfill Active Face Odor Management Handbook* (2019)

[6] http://www.epa.gov/stationary-sources-air-pollution/municipal-solid-waste-landfills-new-source-performance-standards

[7] https://ww3.arb.ca.gov/regact/2009/landfills09/landfillfinalfro.pdf

[8] Placer County Community Development Resources Agency, Planning Services Division. (2018). *Draft Environmental Impact Report: Sunset Area Plan/Placer Ranch Specific Plan* (State Clearinghouse #2016112012) Page 4.3-2

[9] https://en.wikipedia.org/wiki/CALPUFF

APPENDIX A:
BMP CHECKLIST

Site-Wide Odor Plan- Operational Best Management Practices Checklist

Date		Prepared by:	

MRF

1	Process MSW within 48 hours of receipt	YES		NO	
NOTE: May not be able to be measured. Based on reasonable observations does it appear materials have been processed within the required timeframe?					
2	ADC screened to remove oversized materials	YES		NO	
If NO, document observation.					
3	No overnight storage of ADC	YES		NO	
If NO, document observation.					
4	No overnight storage of residue	YES		NO	
If NO, document observation.					
5	Stormwater pond aeration system operating	YES		NO	
If NO, document observation or check appropriate box. ☐ Insufficient water volume ☐ DO reading ≥ 1 mg/l reading					
6	No overnight storage of residue	YES		NO	
If NO, document observation or check appropriate box. ☐ MRF operated outside of Landfill waste acceptance hours.					
7	Waste removed from processing lines at end of shift	YES		NO	
If NO, document observation or check appropriate box. ☐ Mechanical or electrical issue limiting operability.					
8	Waste removed from floors and other surfaces underneath processing equipment	YES		NO	
If NO, document observation or check appropriate box. ☐ Cleaning in process.					
9	Waste removed from floors and other surfaces underneath processing equipment	YES		NO	
If NO, document observation or check appropriate box. ☐ Cleaning in process.					
10	Waste removed from floors and other surfaces underneath processing equipment	YES		NO	
If NO, document observation or check appropriate box. ☐ Cleaning in process.					
11	Waste removed around baling areas	YES		NO	
If NO, document observation or check appropriate box. ☐ Cleaning in process.					
12	Waste removed around ADC load-out area	YES		NO	
If NO, document observation or check appropriate box. ☐ Cleaning in process.					
13	Close at least 2 of the 3 MRF receiving floor doors at the end of the day	YES		NO	
If NO, document observation or check appropriate box. ☐ Confirmed via CCTV cameras.					
14	Sweep asphalt areas around the MRF	YES		NO	
If NO, document observation or check appropriate box. ☐ Cleaning in process.					

Site-Wide Odor Plan- Operational Best Management Practices Checklist

Compost Facility

1	Plan and perform operations consistent with weather predictions and SWOP Section 8F	YES		NO	
NOTE: Based on reasonable observations does it appear operations were planned consistent with the daily odor risk forecast? If NO, document observation.					
2	Perform initial grinding of greenwaste within 7 days of receipt	YES		NO	
NOTE: May not be able to be measured. Based on reasonable observations does it appear materials have been processed within the required timeframe? If NO, document observation.					
3	Perform initial grinding of highly odiferous load of greenwaste within 48 hours of receipt	YES		NO	
NOTE: May not be able to be measured. Based on reasonable observations does it appear materials have been processed within the required timeframe?					
4	Introduce ground greenwaste to windrows or ASP within 14 days of grinding	YES		NO	
NOTE: May not be able to be measured. Based on reasonable observations does it appear materials have been introduced to windrows or ASP within the required timeframe? If NO, document observation.					
5	Cover foodwaste and other compostable materials with ground greenwaste within 2 hrs	YES		NO	
NOTE: May not be able to be measured. Based on reasonable observations does it appear materials have been covered within the required timeframe?					
6	Move applicable materials to ASP and begin introducing air within 7 days	YES		NO	
NOTE: May not be able to be measured. Based on reasonable observations does it appear air was introduced within the required timeframe? If NO, document observation.					
7	Only windrow compost greenwaste	YES		NO	
If NO, document observation.					
8	Biofilter placed over ASP within 24 hours of a section reaching maximum height	YES		NO	
If NO, document observation.					
9	ASP air system connected and operational	YES		NO	
If NO, document observation.					
10	Maintain materials in windrows or ASP for minimum prescribed timeframes	YES		NO	
Will require documentation from MRF Operator.					
11	Maintain materials in curing piles for minimum prescribed timeframes	YES		NO	
Will require documentation from MRF Operator.					
12	Wash down ASP surface areas daily	YES		NO	
If NO, document observation.					
13	North compost pond aeration system operating	YES		NO	
If NO, document observation or check appropriate box. ☐ Insufficient water volume ☐ DO reading ≥ 1 mg/l reading					
14	South compost pond aeration system operating	YES		NO	
If NO, document observation or check appropriate box. ☐ Insufficient water volume ☐ DO reading ≥ 1 mg/l reading					

Site-Wide Odor Plan- Operational Best Management Practices Checklist

Landfill

1	Minimize size of working face necessary to maintain safety	YES		NO	
NOTE: Based on reasonable observations does it appear the working face is as small as practical and safe? If NO, document observation.					
2	Minimize open air exposure time of wastes	YES		NO	
NOTE: Are newer wastes being placed over older wastes on a consistent basis? If NO, document observation.					
3	Bury sludge and other highly odiferous loads immediately upon receipt	YES		NO	
If NO, document observation.					
4	Begin placing daily cover immediately following last load of waste	YES		NO	
If NO, document observation.					If NO, document observation.
5	Utilize soil, MRF and C&D fines as specified in SWOP	YES		NO	
If NO, document observation.					

APPENDIX B:
2015 ODOR STUDY

Western Placer Waste Management Authority
Roseville, CA

Odor Assessment

Report

Revision 4

November 2015

Prepared by

Thomas R. Card, PE
Environmental Management Consulting
41125 278th Way SE, Enumclaw, WA 98022 USA
360-802-5540 Fax:360-802-5541
E-Mail:trcard@earthlink.net

Charles E. Schmidt, PhD
19200 Live Oak Road, Red Bluff, CA 96080
530-529-4256 Fax:530-529-4878

Table of Contents

1. INTRODUCTION 1

Site Location 1
Objectives 1
Scope 2

2. SUMMARY 3

3. ODOR SAMPLING RESULTS 6

Process Description 7
Landfill Inactive Surfaces 8
Landfill Active Working Face 11
Materials Recovery Facility (MRF) 12
Greenwaste Composting Facility 13

4. DATA ANALYSIS 15

Inactive Landfill Surfaces 15
Landfill Active Working Face 15
Materials Recovery Facility (MRF) 16
Greenwaste Composting Facility 16

Figures

Figure 1.1 WPWMA Location Map.
Figure 2.1 Overall Contribution to Site Odor by Process (Emission Units in DT/Min)
Figure 4.1 WPWMA Process Locations.
Figure 4.2 Sampled Grid Cells.
Figure 5.1 Interpolated Windrow Compost Emission Curve.

Tables

Table 1.1 Summary of Flux Chamber Testing at the WPWMA Facility (Active LF working face, Inactive LF working face, MRF, and Windrow compost facility).
Table 4.1 Summary of Landfill Gas Survey Data Since 2012 (Sampled Cells Highlighted).
Table 4.2 Portion of each Grid Cell Sampled Represented by the Methane Instantaneous Screening Ranges (internal spatial representation of grid cells tested).
Table 4.3 Sampling Results for Grid Cells (Odor Flux, DT/min-m2).
Table 4.4 Measured Odor Flux Values from the Active Working Face.
Table 4.5 Sampling Results for the MRF Odor Sources.
Table 4.6 Summary of Compost Facility Sampling Results.
Table 5.1 Calculated total emissions (DT/min) for each measured cell.
Table 5.2 Calculated total Emissions from Landfill Inactive Surfaces.
Table 5.3 Summary of Landfill Active Working Face Odor Emissions.
Table 5.4 Summary of MRF Odor Emissions.
Table 5.5. Summary of Compost Emissions.

Attachments

1. Data Validation Technical Memorandum
    a. Field Data Sheets
    b. Chain of Custody Sheets
    c. Laboratory Reports
2. Sampling Plan

1. Introduction

Site Location

The test site, Western Placer Waste Management Authority (WPWMA) facility is located in Roseville, California. The site includes a municipal solid waste (MSW) landfill, a Materials Recovery Facility (MRF), and a green waste composting facility.

Figure 1.1 –WPWMA Location Map.

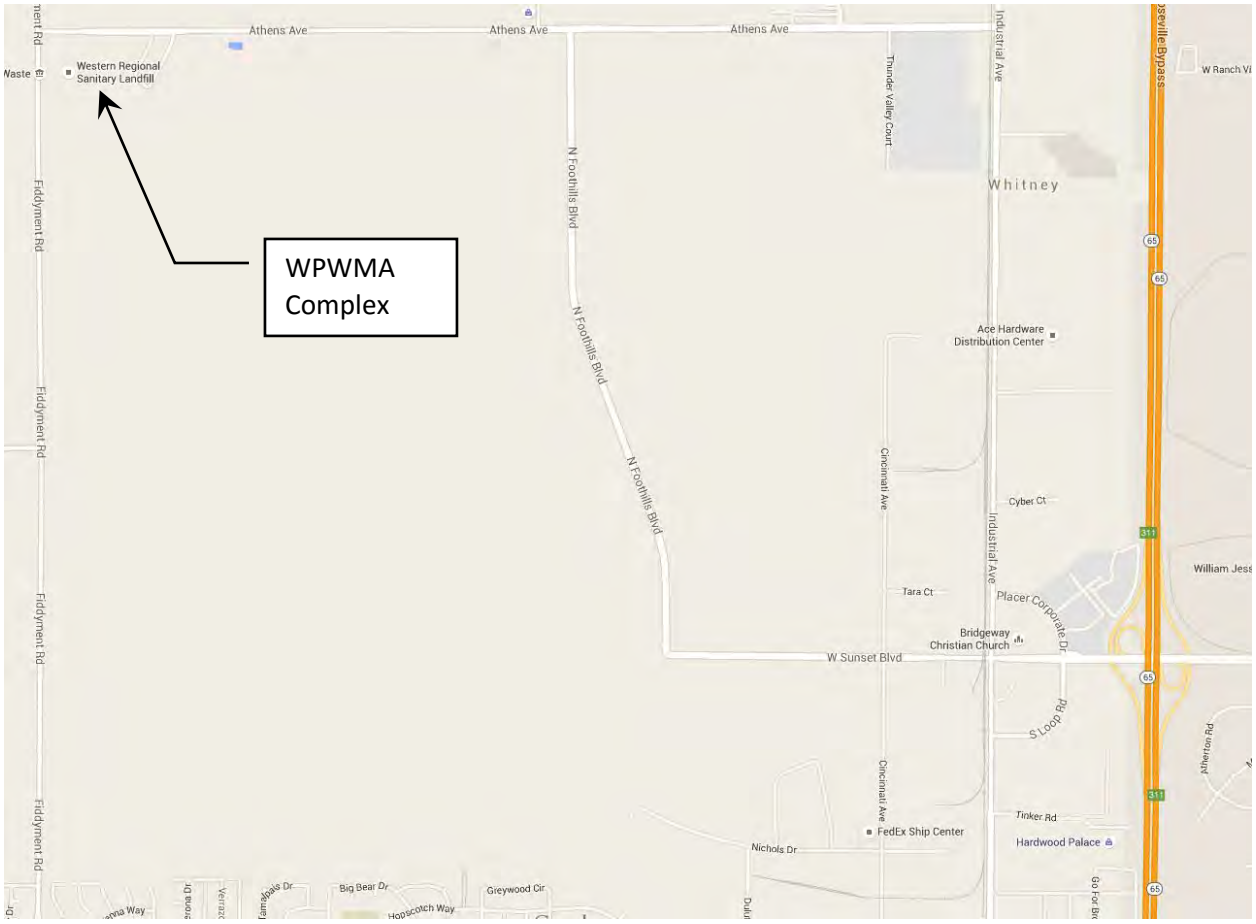

Objectives

The project objective of the Odor Assessment was to quantify surface odor emissions from the active landfill face, inactive landfill surface, the MRF, and the green waste compost facility. These sources are considered all major odor emission sources from this facility and the report for these sources is intended to be comprehensive. The primary specific objectives included:

1) Perform an odor source assessment/evaluation of key odor emitting sources on site,
2) Generate odor emission factors for odor sources,

3) Provide data that can be used to enhance the existing Odowatch® monitoring system for the purpose of providing more representative and accurate predictions (real-time) of off-site odor impacts to the surrounding areas, and
4) Coordinate with Odotech to integrate the resulting data into the WPWMA's Odowatch® monitoring system.

Scope

The project assessment includes four tasks:

1. quantifying the odor emissions from the landfill active face, including recently covered refuse;
2. quantifying the odor emissions from the landfill inactive surface;
3. quantifying the odor emissions from the MRF; and
4. quantifying the odor emissions from the windrow compost facility.

A summary of the scope per task is provided in Table 1-1. Samples were collected following the methodology and protocols identified in the Sampling Plan.

Sampling and analysis included the following methods.

- **Direct Odor Flux Chamber Measurements-** Odor samples were collected using a flux chamber conforming to EPA-approved design parameters and sampling methodologies (see Ref 1). Odorous air samples were collected and shipped overnight express, for next day laboratory analysis. Screening was also performed using a real-time instrument for hydrogen sulfide (H2S) and colorimetric detector tubes for ammonia.

- **Olfactometry** – Odor concentration by olfactometry (ASTM E-679, see Ref 2) using Odor Science and Engineering, Inc. odor panel analyses was completed to determine the magnitude of odor emissions from each source, to determine the relative offensiveness of odors from each source, and to provide input data for dispersion modeling. Odor panel analysis included odor concentrations expressed as dilutions to threshold (D/T), odor offensiveness as measured by hedonic tone, and odor character descriptors.

- **Advective Flow Assessment-** Advective flow from appropriate sources (e.g., compost piles) was determined using a trace gas (10% helium) in the flux chamber sweep air by collecting gas samples for analysis of residual helium by ASTM Method D-1945.

Table 1-1. Summary of Source Testing at WPWMA (Active LF working face, Inactive LF surfaces, MRF, and Green waste compost facility).

Test Condition	Flux Tests	Comments
Landfill Active Working Face and Interim Cover	12	Samples were collected over several days representing a spectrum of municipal waste and different ages of daily cover (no gas well installation).
Inactive Landfill Surfaces	20	One grid cell for the 'zero-detect' area and four grid cells for the methane detected area; four flux test per grid cell.
MRF	12	Source testing on waste piles, inside and outside of structure over several days.
Windrow Compost Site	40	Testing of green waste tipping pile, chop pile, 5-to-6 days in the compost cycle, cure pile, and finish pile.
Compost Leachate Pond	1	
Blank Test	6	Minimum 5%
Replicate Test	6	Minimum 5%
TOTAL SAMPLES	97	

2. Executive Summary

Key Findings and Recommendations

1. The composting operation shows very low odor for a green waste composting process as compared to industry average. Consequently, there are not many alternatives that for the classic windrow composting operations to improve site emissions from composting. However, odor from the composting processes dominates the odor from the site (see pie chart). In order to significantly reduce odor from composting, a new technology must be applied such as aerated static pile (ASP) composting. Recent test data have shown ASP technologies can reduce odor emissions by at least 80%, and employing one of several ASP technologies would likely decrease site odor by over 50%. The second largest composting source, the chop pile, should also see and emissions reduction if the size of the pile were reduced. Given that the compost cycle is greatly compressed with the ASP Technology, a proportional reduction in this source is also expected to be gained since there will be a much greater demand for chopped green waste in the process.

2. The materials recycling facility (MRF) shows low odor as compared to the industry standard for refuse sorting and processing. The contribution to site odor from the MRF is relatively minor. But, since the MRF is very close to the site border, operational practices (closing doors) that would further reduce odors from the MRF should be considered since odor sources nearest to the property fence line have a relatively greater effect on odors detected off site.

3. The active face of the landfill shows odors that are typical of municipal landfills, however two waste streams tested show relatively high odor in this small area of the site. The land filling of municipal wastewater biosolids has a very high contribution to the odor from the active face. In addition, the alternative daily cover (ADC) from the MRF also has high odor compared to the municipal refuse. Options for controlling odors from these sources, as well as best operational management practice, should reduce odors from the active face. Engineering options may need to be considered for reducing the odors from the biosolids such as temporary cover applications.

4. The inactive landfill was tested using the screening data for methane from the regulatory required monitoring program. High variability was observed in the in these data. This was likely related to operational changes experienced in the field related to the energy plant operations. In addition, some of the inactive landfill areas showed about twice normal odor emissions on a surface area basis. This is also likely related to the collection of landfill gas as controlled by the energy plant on site. It is important that the landfill gas collection system be operated in such a fashion that the fugitive emissions from the inactive, covered landfill (which is a huge surface area of the site) results in the minimum fugitive landfill gas emission. Note that it is likely that the conditions experienced during the testing on site reflects an upset condition, and it is recommended that a retest of the inactive landfill be conducted in order to generate more representative odor emissions from the inactive landfill surfaces.

Program Summary

All sampling took place during the week of August 17, 2015 and the following Monday, August 24, 2015. All sampling was completed per the attached Sampling Plan. All data taken is provided in the attached Data Validation Technical Memorandum.

The overall contribution to total site odor for each of the site processes is shown in Figure 2.1. Composting and the inactive landfill surfaces dominate the site odor, with composting being the largest contributor to site odor.

Figure 2.1 Overall Contribution to Site Odor by Process.

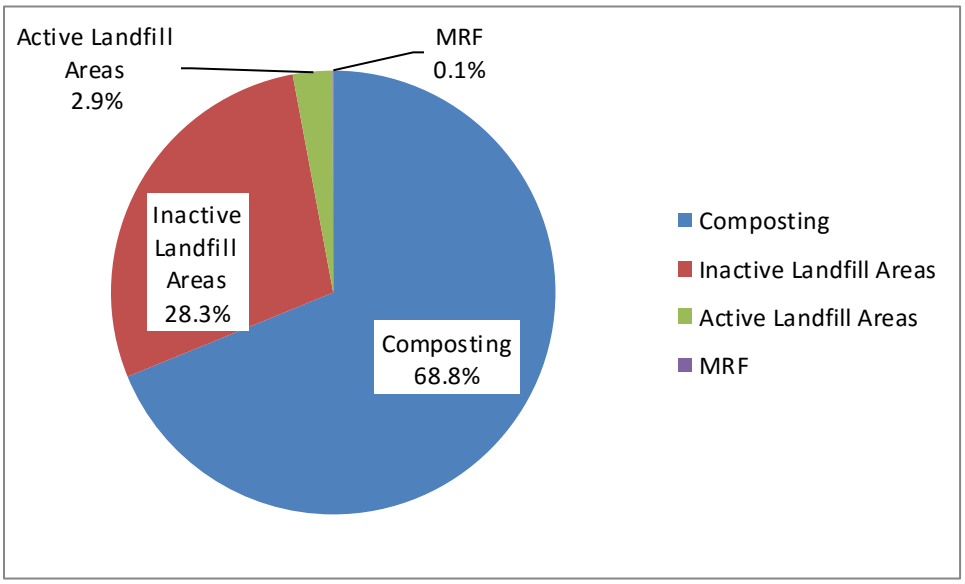

Table 2.1 presents a more detailed summary of sampling results. The windrow composting was the largest odor source on site. However, the composting operation was the lowest emitting composting source on a ton/day size basis, than any compost facility that we have recently tested (we have tested five similar facilities for odor in the last five years). This means that it is unlikely that any process changes to the windrow composting technology could lower the odor emission rate.

The next highest odor source on site are the inactive surfaces at the landfill. The estimate of the inactive surface emissions is driven predominantly by Grid Cell #39, that was anticipated to be low based on previous CARB screening, but turned out to be quite high. This grid cell may not be representative of all the low emitting cells. If not, then the estimate of the inactive landfill surfaces could be biased high by as much as a factor of 3. If Grid Cell #39 had the expected emissions, then the overall inactive surface emission value would be reduced to 700,000 DT/min instead of the measured 2,100,000 DT/min.

The remaining sources were very low, perhaps inconsequential. There were noticeable odors, from these sources, directly adjacent to these sources, but the odor from these sources was, in general, not detectable past the property lines.

The units in Table 2.1 are in DT/min. One DT/min is an odor emission rate approximately equal to 1 μg/min of hydrogen sulfide. If the site were vacant land, it would have an approximate emission rate of 650,000 DT/min.

Table 2.1 Summary of Sampling Results.

Source	Odor Emissions (DT/min)
Compost Tipping Pile	21,654
Compost Chop Pile	1,604,055
Compost Windrows	3,500,295
Compost Product	1,013
Ponds	31,126
Total	5,127,017
MRF Non-recycle Material	2,860
MRF Recycle Material	944
MRF ADC	199
Total	4,003
Open Face MSW	82,872
Open Face Biosolids	87,065
ADC on Landfill	33,249
Soil Cover on Landfll	10,963
Total	214,150
Inactive Landfill	2,105,365
Total Odor	7,481,661

3. Background on Odor Assessment Technology

Odors can be measured using both field and laboratory instruments. In the field, a scentometer is used (see Photo 3.1). This instrument is routinely used for odor regulation enforcement and can reliably measure odors down to 7.5 dilutions to threshold (DT). This means that the odor would require 7.5 cubic feet of odor free air to every 1 cubic foot of odorous air to render the result not-detectable by the average person.

Odor can also be measured in the laboratory using an olfactometer. A field sample is taken in a Tedlar® bag and shipped to a laboratory for analysis. The same units of measurement, dilutions to threshold (DT) are used for this. Photos 3.2 and 3.3 show the laboratory olfactometer and the odor bag sample.

When an odor sample is taken from a USPEA flux chamber (see photo 3.4) the odor source strength for a facility can be quantified. After a source has been quantified, the offsite impacts can be predicted using USEPA-approved dispersion models.

For this project, odor assessment included flux chamber testing, collection of gas samples in Tedlar bags, and off site analysis by the laboratory. Rather than ambient air testing using a scentometer, off site odor will be predicted by dispersion modeling. The advantage to this assessment approach is that the source assessment using the flux chamber provided valuable on site source apportionment data that is useful for diagnosing and remediating process odors, and these flux data are also used to develop odor emission factors which provide quantitative input to dispersion modeling that can be used to describe off site odors.

Photo 3.1 A Nasal Ranger® Scentometer.

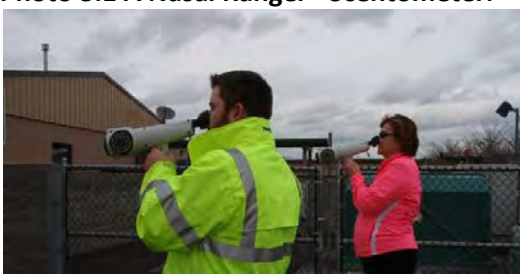

Photo 3.2 Laboratory Olfactometer

Photo 3.3 Odor Sample in Tedlar® Bag

Photo 3.4 USEPA Flux Chamber

4. Odor Sampling Results

All sampling took place during the week of August 17, 2015 and the following Monday, August 24, 2015. All sampling was completed per the attached Sampling Plan. All data taken is provided in the attached Data Validation Technical Memorandum.

Process Description

The WPWMA Complex includes a Materials Recovery Facility (MRF), windrow composting, and a landfill. The location of these activities is shown in Figure 4.1. The site is approximately one-mile-long and 0.5 mile wide.

Figure 4.1 – WPWMA Process Locations.

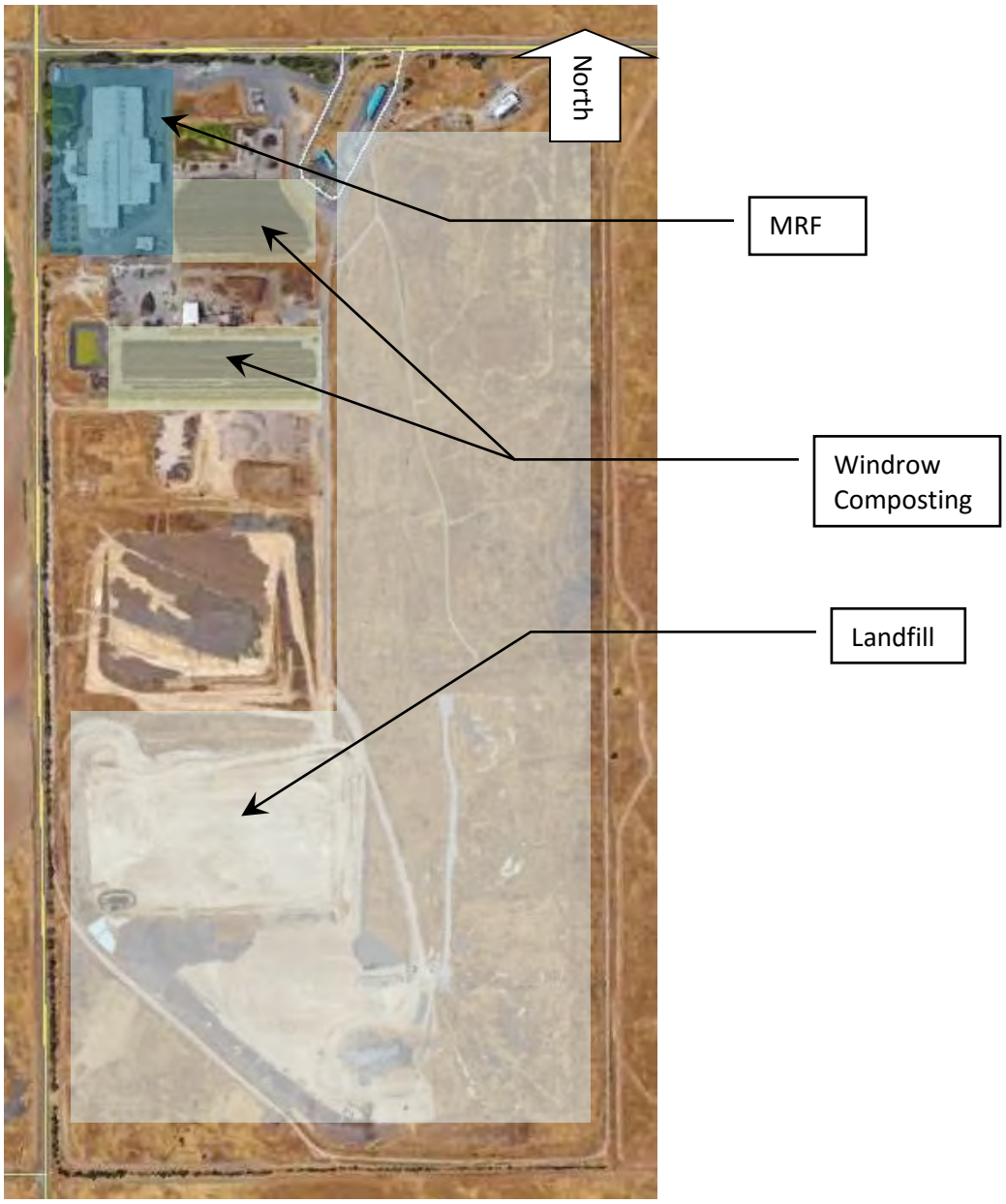

Landfill Inactive Surfaces

Sample locations were selected based on the analysis of the annual/quarterly landfill gas screening data for methane emissions (integrated grid cell methane concentration data) that has been collected per the California Air Resources Board protocol (**Implementation Guidance Document for The Regulation To Reduce Methane Emissions From Municipal Solid Waste Landfills**). Methane screening data from 2012 to current was used as a surrogate for odor emissions. The CARB protocol is based on dividing the landfill into 50,000 ft^2 grid cells. Based on the analysis of the quarterly methane monitoring data, for the grid cells that are accessible and included in survey, all regularly monitored site grid cells have been placed into three groups, representing the highest emitting cells, lowest emitting cells, and the cells in between (see Table 4.1). Within these three groups, the grid cells have been ranked based on integrated methane grid data as shown, and one grid cell per group has been selected, on a methane emitted mass basis, to represent the group. The grid cell that represented the average methane emission for the group was selected as the primary target for sampling (see Table 4.1 for calculation). If that target grid cell was unavailable for testing, or not representative on the day of the test, then the grid cell closest to the average was selected.

In addition, a grid cell with no methane detection was selected to represent the 36 grid cells were no methane has been detected.

The technical approach for assessing the inactive landfill surface where historic methane emissions are used to represent current methane and odor emissions as a surrogate for odor, assumes that the operation of the landfill gas collection system is similar to the time of testing. Since operational changes in the landfill gas collection system were experienced prior to testing, it is likely that variation in landfill gas emissions compared to historic landfill operations resulted in additional variability in methane and odor emissions. This does not weaken the analysis per se, but it does add to variability in the measured data set and assumptions used in the calculation of inactive landfill gas odor emissions.

Although we had back-up grid cells selected for each test cell identified by the process described above, as shown in the data, divergence was found, in particular, with grid cell 39. The results found with this cell showed that the odor flux was actually the second highest cell tested where the historic methane data placed it in the low category of grid cells. Unfortunately, since the screening data collected for methane was also highly variable during the testing, there was no clear indication that an alternative grid cell should be used to represent this category. Regardless, the measured odor flux data were used to generate representative odor flux from the inactive landfill surface accounting for the observed variability in the data.

A summary of the tested grid cells is shown in Figure 4.2 and is given below:

Potential High Range Emitting: 129
Potential Mid-Range Emitting: 106, 104
Potential Low Range Emitting: 39
Zero-detect: 52

Figure 4.2 Sampled Grid Cells.

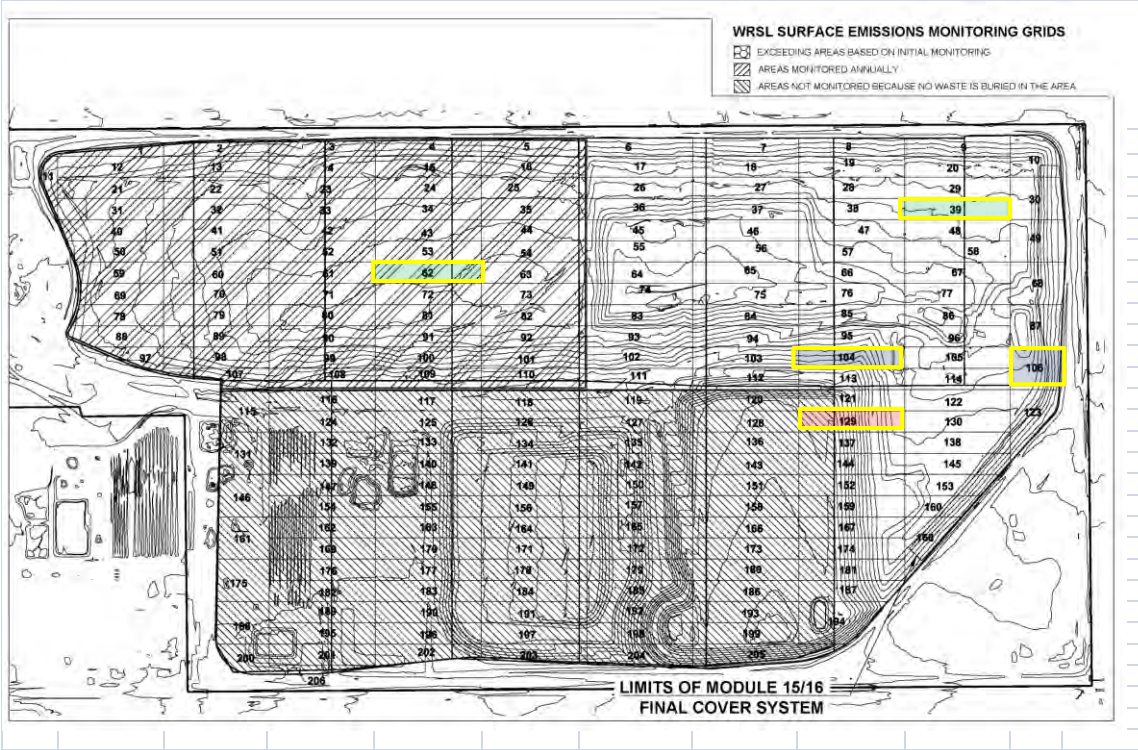

Table 4.1 Summary of Landfill Gas Survey Data Since 2012 (Sampled Cells Highlighted).

Index	Cell#	Average	StDev	Cumulative Sum	% of Total
1	123	39.10	28.27	39.10	5.8%
2	130	36.31	40.67	75.41	11.1%
3	145	35.39	38.60	110.80	16.4%
4	129	33.14	42.00	143.94	21.3%
5	138	30.83	34.67	174.77	25.8%
6	121	30.00	28.48	204.77	30.3%
7	122	28.47	21.34	233.24	34.5%
8	194	26.06	26.34	259.30	38.3%
9	113	24.06	24.55	283.36	41.9%
10	106	22.63	11.94	305.98	45.2%
11	114	20.43	9.71	326.41	48.2%
12	104	19.82	15.61	346.23	51.2%
13	153	19.57	21.41	365.81	54.1%
14	96	16.36	15.62	382.17	56.5%
15	137	15.07	13.52	397.24	58.7%
16	87	14.73	11.81	411.97	60.9%
17	144	14.73	14.42	426.70	63.1%
18	105	12.71	5.59	439.42	64.9%
19	152	12.00	11.53	451.42	66.7%
20	160	11.33	14.76	462.75	68.4%
21	159	11.25	15.73	474.00	70.1%
22	95	10.85	8.63	484.85	71.7%
23	174	8.92	10.65	493.76	73.0%
24	167	8.83	7.71	502.60	74.3%
25	168	8.18	7.72	510.78	75.5%
26	48	7.00	6.11	517.78	76.5%
27	58	6.77	7.36	524.55	77.5%
28	77	6.23	6.26	530.78	78.4%
29	86	6.17	6.13	536.94	79.4%
30	68	6.00	4.69	542.94	80.2%
31	181	6.00	6.03	548.94	81.1%
32	9	5.62	4.82	554.56	82.0%
33	39	5.62	4.74	560.17	82.8%
34	67	5.46	5.70	565.64	83.6%
35	20	4.62	5.08	570.25	84.3%
36	8	4.43	9.88	574.68	84.9%
37	29	4.23	5.85	578.91	85.6%
38	187	4.00	4.84	582.91	86.2%
39	84	3.77	6.23	586.68	86.7%
40	85	3.69	3.61	590.37	87.3%
41	103	3.62	3.80	593.99	87.8%
42	111	3.54	4.22	597.53	88.3%
43	102	3.15	4.54	600.68	88.8%
44	112	3.15	4.14	603.83	89.2%
45	49	3.00	3.00	606.83	89.7%
46	66	2.92	4.21	609.76	90.1%
47	10	2.77	3.00	612.53	90.5%
48	37	2.77	4.19	615.30	90.9%
49	94	2.69	3.30	617.99	91.3%
50	47	2.62	3.50	620.60	91.7%
51	46	2.54	3.02	623.14	92.1%
52	93	2.54	4.89	625.68	92.5%
53	19	2.46	4.07	628.14	92.8%
54	83	2.46	5.95	630.60	93.2%
55	92	2.33	4.04	632.94	93.5%
56	76	2.15	2.76	635.09	93.9%
57	57	2.08	2.93	637.17	94.2%
58	38	2.00	2.83	639.17	94.5%
59	78	2.00	3.46	641.17	94.8%
60	88	2.00	3.46	643.17	95.1%
61	89	2.00	3.46	645.17	95.4%
62	90	2.00	3.46	647.17	95.6%
63	91	2.00	3.46	649.17	95.9%
64	30	1.92	2.72	651.09	96.2%
65	55	1.62	2.02	652.71	96.5%
66	56	1.54	2.54	654.24	96.7%
67	28	1.31	2.46	655.55	96.9%
68	65	1.23	2.45	656.78	97.1%
69	6	1.15	1.46	657.94	97.2%
70	27	1.15	2.73	659.09	97.4%
71	79	1.00	1.73	660.09	97.6%
72	97	1.00	1.73	661.09	97.7%
73	107	1.00	1.73	662.09	97.9%
74	109	1.00	1.73	663.09	98.0%
75	110	1.00	1.73	664.09	98.2%
76	7	0.92	1.38	665.01	98.3%
77	75	0.92	1.32	665.94	98.4%
78	45	0.85	1.57	666.78	98.5%
79	64	0.85	1.72	667.63	98.7%
80	36	0.77	1.17	668.40	98.8%
81	17	0.69	1.70	669.09	98.9%
82	26	0.69	1.49	669.78	99.0%
83	74	0.69	0.85	670.48	99.1%
84	42	0.67	1.15	671.14	99.2%
85	98	0.67	1.15	671.81	99.3%
86	99	0.67	1.15	672.48	99.4%
87	108	0.67	1.15	673.14	99.5%
88	18	0.46	0.78	673.60	99.6%
89	3	0.33	0.58	673.94	99.6%
90	11	0.33	0.58	674.27	99.7%
91	12	0.33	0.58	674.60	99.7%
92	21	0.33	0.58	674.94	99.8%
93	50	0.33	0.58	675.27	99.8%
94	51	0.33	0.58	675.60	99.9%
95	53	0.33	0.58	675.94	99.9%
96	100	0.33	0.58	676.27	100.0%
97	101	0.33	0.58	676.60	100.0%
98	1	0.00	0.00	676.60	100.0%
99	2	0.00	0.00	676.60	100.0%
100	4	0.00	0.00	676.60	100.0%
101	5	0.00	0.00	676.60	100.0%
102	13	0.00	0.00	676.60	100.0%
103	14	0.00	0.00	676.60	100.0%
104	15	0.00	0.00	676.60	100.0%
105	16	0.00	0.00	676.60	100.0%
106	22	0.00	0.00	676.60	100.0%
107	23	0.00	0.00	676.60	100.0%
108	24	0.00	0.00	676.60	100.0%
109	25	0.00	0.00	676.60	100.0%
110	31	0.00	0.00	676.60	100.0%
111	32	0.00	0.00	676.60	100.0%
112	33	0.00	0.00	676.60	100.0%
113	34	0.00	0.00	676.60	100.0%
114	35	0.00	0.00	676.60	100.0%
115	40	0.00	0.00	676.60	100.0%
116	41	0.00	0.00	676.60	100.0%
117	43	0.00	0.00	676.60	100.0%
118	44	0.00	0.00	676.60	100.0%
119	52	0.00	0.00	676.60	100.0%
120	54	0.00	0.00	676.60	100.0%
121	59	0.00	0.00	676.60	100.0%
122	60	0.00	0.00	676.60	100.0%
123	61	0.00	0.00	676.60	100.0%
124	62	0.00	0.00	676.60	100.0%
125	63	0.00	0.00	676.60	100.0%
126	69	0.00	0.00	676.60	100.0%
127	70	0.00	0.00	676.60	100.0%
128	71	0.00	0.00	676.60	100.0%
129	72	0.00	0.00	676.60	100.0%
130	73	0.00	0.00	676.60	100.0%
131	80	0.00	0.00	676.60	100.0%
132	81	0.00	0.00	676.60	100.0%
133	82	0.00	0.00	676.60	100.0%

Within each grid cell, the field screening instantaneous methane data on the day prior to, and the day of sampling, allocated the area in each grid cell as low, middle, and high. Table 4.2 shows the portion of area in these ranges for each grid cell. For example, for Grid Cell #104, 85% of the total grid cell area (50,000 ft2) was represented by the low instantaneous methane screening range.

Table 4.2 Portion of each Grid Cell Sampled Represented by the Methane Instantaneous Screening Ranges (internal spatial representation of grid cells tested).

Cell Category	Grid No.	Low	Mid	High	Highest
Non-detect Grid Cells	52	25.0%	25.0%	25.0%	25.000%
Low Grid Cells	39	75.0%	20.0%	10.0%	0.003%
Mid Grid Cells	106	85.0%	10.0%	5.0%	0.003%
Mid Grid Cells	104	50.0%	25.0%	25.0%	0.003%
High Grid Cells	129	40.0%	40.0%	20.0%	0.003%

Finally, Table 4.3 presents the measured odor flux for each of these regions in each of the grid cells.

Table 4.3 Sampling Results for Grid Cells (Odor Flux, DT/min-m2).

		Inter Cell Range Represented			
Cell Category	Grid No.	Low	Mid	High	Highest
Non-detect Grid Cells	52	0.50	0.50	0.62	0.62
Low Grid Cells	39	5.27	0.42	6.27	6.81
Mid Grid Cells	106	0.35	0.42	13.62	405.08
Mid Grid Cells	104	2.04	2.42	1.23	0.88
High Grid Cells	129	0.50	1.23	29.19	163.00

Note that in Table 4.3, the highest reading only represents a single point in the 50,000 ft2 grid cell and is therefore inconsequential to average grid emissions. The highest point was measured just to determine if there was odor breakthrough at any point on the grid surface.

Landfill Active Working Face

Five samples were taken from the active face (taken on two separate days) and one sample was taken from deposited biosolids. The sample values are presented in Table 4.4. The five measurements taken on two different days represent a normal variability of raw MSW on an active face. This source is typically highly variable, and the range of odor emissions observed on two different days and at five test locations is common to other active landfill surfaces tested at other sites.

The biosolids odor flux rate was about 50 times higher than the average MSW odor flux rate. This material, as demonstrated by the measured odor flux, is a significant contributor of active face odor emissions making the amount of this material or the surface area of this material disposed of at the active face of the landfill and key source of odor emissions. However, the active face as a source has been shown to contribute to only about 3% of the total site odor.

Table 4.4 Measured Odor Flux Values from the Active Working Face.

Source	Odor Flux DT/m2-min
Active Face	14.85
Active Face	22.88
Active Face	6.81
Active Face	6.81
Active Face	126.00
Average	35.47
Biosolids	1,863

Materials Recovery Facility (MRF)

Samples were taken from the various segregated materials in the MRF. Table 4.5 presents the sampling results. Based on these results, for MRF site odor analysis, all the combined solid waste values were averaged together and all the sorted recovered material were averaged together. The alternative daily cover was treated separately.

Table 4.5. Sampling Results for the MRF Odor Sources.

Source	Odor Flux (DT/min-m2)
Raw Commerical SW	4.81
Raw Commerical SW	4.08
Average	4.44
Raw Residential SW	4.08
Raw Residential SW	1.23
Raw Residential SW	1.58
Raw Residential SW	3.42
Average	2.58
Post-Sort SW	3.15
Post-Sort SW	3.15
Average	3.15
Plastics	0.88
Plastics	1.04
Average	0.96
Cardboard	1.23
Cardboard	0.88
Average	1.06
Alternative Daily Cover Material	6.81
Alternative Daily Cover Material	7.42
Average	7.12

Green Waste Composting Facility

Samples were taken from the feedstock pile, from active windrows at various stages (times) during the active composting process and from the finished product storage piles. The results are summarized in Table 4.6. Note the extreme variability of the chopped feedstock pile and the early compost cycle. In addition, mixing the compost rows resulted in the immediate lowering of emissions. Based on our experience emissions can either increase, decrease, or remain constant during mixing events. There currently is no hypothesis as to why the emissions decreased at this location. Our only comment is that highly aerobic compost material emissions are not very much affected by mixing. It is possible that the added aeration and the release of any gases in the interstitial spaces within the pile could result in lowering of the emissions after mixing.

Table 4.6. Summary of Compost Facility Sampling Results.

SOURCE	DAY	Odor	Helium	Helium	Total Flow	Total Flow	Odor Flux
		D/T	(%)	Dilution	(lpm)	(m3/min)	DT/m2,min-1
Tipping Pile	Newer	30	9.91	1.304	38	0.038	8.8
Tipping Pile	Newer	12	9.91	0.638	78	0.078	7.2
Tipping Pile	Older	13	9.86	0.688	72	0.072	7.2
Tipping Pile	Older	58	9.86	0.686	72	0.072	32.1
Chopped Feedstock Pile	Newer	210	9.91	0.73	68	0.068	110
Chopped Feedstock Pile	Newer	354	9.91	0.8	62	0.062	169
Chopped Feedstock Pile	Older	11,615	9.86	0.775	64	0.064	5,684
Chopped Feedstock Pile	Older	163	9.86	1.024	48	0.048	60
Pre-mix Compost Windrow	0	638	9.89	0.366	135	0.135	663
Pre-mix Compost Windrow	0	82	9.89	0.816	61	0.061	38
Compost Windrow	1	35	9.86	0.874	56	0.056	15
Compost Windrow	1	45	9.86	0.967	51	0.051	18
Compost Windrow	1	23	9.91	0.696	71	0.071	13
Compost Windrow	1	2,990	9.91	0.85	58	0.058	1,341
						Average	347
Compost Windrow	5	979	9.89	0.426	116	0.116	874
Compost Windrow	5	126	9.89	0.272	182	0.182	176
Compost Windrow	5	4,602	10.01	0.642	78	0.078	2,760
Compost Windrow	5	250	10.01	0.409	122	0.122	235
						Average	1,011
Post Mix Windrow	5, T=0	1,553	9.89	0.893	55	0.055	662
Post Mix Windrow	5, T=4 hr	1,066	9.89	1.332	37	0.037	304
Compost Windrow	15	9	9.89	1.437	34	0.034	2.4
Compost Windrow	15	693	9.89	1.684	29	0.029	156.5
Compost Windrow	15	38	10.01	2.437	21	0.021	6.0
						Average	55.0
Compost Windrow	32	137	9.89	2.022	24	0.024	25.8
Compost Windrow	32	23	9.86	1.105	45	0.045	7.9
Compost Windrow	32	32	9.89	2.232	22	0.022	5.5
Compost Windrow	32	41	9.86	2.979	17	0.017	5.2
						Average	11.1
Compost Windrow	81	15	9.91	1.531	32	0.032	3.7
Compost Windrow	81	11	9.91	2.355	21	0.021	1.8
Compost Windrow	81	16	9.86	2.06	24	0.024	2.9
Compost Windrow	81	29	9.86	2.089	24	0.024	5.3
						Average	3.4
Compost Windrow	98	32	10.01	1.465	34	0.034	8.4
Compost Windrow	98	69	10.01	1.494	34	0.034	17.8
Compost Windrow	98	32	9.89	2.118	23	0.023	5.7
Compost Windrow	98	35	9.89	1.385	36	0.036	9.6
						Average	10.4
Finished Product	Newer	23	9.86	1.761	28	0.028	5.0
Finished Product	Newer	23	9.86	1.801	27	0.027	4.8
Finished Product	Older	38	9.89	3.983	12	0.012	3.6
Finished Product	Older	35	9.89	3.399	15	0.015	3.9
						Average	4.3
South Pond	As is	82	NA	NA	5	0.005	3.2

5. Data Analysis

In general, total process emissions are calculated by multiplying the measured odor flux value by the area the flux sample represented. However, in this section, the specific calculation methodology will be discussed in detail.

Inactive Landfill Surfaces

Each sampled grid cell was screened to determine the area to be represented (Table 4.2) and the measured flux values for each cell category (Table 4.3). Table 5.1 shows the total odor emissions calculated in this manner for each measured cell. Each cell is nominally 4,673 m^2. For example Non-detect grid low = 4,673 m^2 x 0.5 DT/min*m^2 x 25% = 584 DT/min

Table 5.1 Calculated total emissions (DT/min) for each measured cell.

Cell Category	Grid No.	Low	Mid	High	Highest	Total
Non-detect Grid Cells	52	584	584	719	719	2,606
Low Grid Cells	39	18,467	395	2,930	1	21,793
Mid Grid Cells	106	1,375	198	3,181	57	4,811
Mid Grid Cells	104	4,763	2,831	1,438	0	9,031
Highest Grid Cells	129	935	2,301	27,283	23	30,540

Then, based on Table 5.1, the number of cells that each tested cell represented were calculated. The total emissions from landfill inactive surfaces are the sum of all these individual emission cell ranges. Note that the second highest emission category was the low range grid cell. The sampling results for this cell (39) were not what were anticipated based on the screening assessment. The anticipated results would produce an emission estimate that would be dramatically lower than the measured results. It is possible that temporary gas system transients may have affected these results. The gas system was shut down due to power outage during the week of testing.

Table 5.2 Calculated total Emissions from Landfill Inactive Surfaces.

Cell Category	Avg Flux (DT/min-m2)	Emissions (DT/min)	# of Cells	Total Emissions (DT/min)
Non-detect Grid Cells	0.56	2,606	36	93,817
Low Grid Cells	4.66	21,793	79	1,721,634
Mid Grid Cells	1.48	6,921	11	76,131
Highest Grid Cells	6.54	30,540	7	213,783
				2,105,365

The anticipated emission rate for the low grid cells (based on the analysis of the CARB screening data) would be about 4,000 DT/min. If this were true, the total emissions would be reduced to about 700,000 DT/min instead of the 2,100,000 DT/min

Landfill Active Working Face

The emissions from the landfill working face area were calculated by using average areas multiplied the average measured flux values. Table 5.3 presents a summary of these calculations. Note that even

though the biosolids on the active face is a very small surface area, because their unit flux rate is significantly larger than that of the other solid wastes being buried, the resulting emissions from the biosolids are significant.

Table 5.3 Summary of Landfill Active Working Face Odor Emissions.

	Odor Flux	Area		Emissions
Source	**(DT/min-m2)**	**(ft2)**	**(m2)**	**(DT/min)**
Open Face MSW	35.47	25,000	2,336	82,872
Open Face Biosolids	1,863	500	47	87,065
ADC on Landfill	7.12	50,000	4,673	33,249
Soil Cover on Landfll	0.59	200,000	18,692	10,963
Total				214,150

Materials Recovery Facility (MRF)

Table 5.4 shows the emission calculations for the MRF. These emissions are quite low as compared to other solid waste sorting facilities. As they are now, they represent an insignificant odor source compared to the other process odor sources on site.

Table 5.4 Summary of MRF Odor Emissions.

	Odor Flux	Area		Emissions
Source	**(DT/min-m2)**	**(ft2)**	**(m2)**	**(DT/min)**
MRF Non-recycle Material	3.19	9,600	897	2,860
MRF Recycle Material	1.01	10,000	935	944
MRF ADC	7.12	300	28	199
Total				4,003

Green Waste Composting Facility

Computing the emissions from the windrow composting first involve calculating and averaging the flux rate for the windrow composting process. The process is first simulated by interpolating the measured process life cycle or 'days' to estimate the emissions for the process days that were not measured. For example, of the 90 to 100 days it takes the compost to mature, six of those days were sampled with the remaining day's emissions were estimated by interpolation. Figure 5.1 shows this interpolated emissions curve. The data represented by this curve was integrated to determine that the average compost emission rate at 94.5 DT/min-m^2 for the windrow process life cycle. Therefore, the average emissions, for each compost windrow, over the compost life cycle, is 94.5 DT/min-m^2.

Note that the vast majority of the emissions occur early in the compost cycle.

Based on the dimensions of the compost windrow, we can calculate the fraction of compost surface area per m^2 of pad area. This calculation shows that the compost surface area is 96.1% of the pad area.

Using these data, Table 5.5 was generated showing the total emissions from the composting operations. The emissions are dominated by the windrows, with a significant contribution from the chop piles.

The facility processes about 50,008 tons per year. This provides a compost emission factor of 25,548 DT/min per ton/day. The industry average (based on limited data) is about 200,000 DT/min per ton/day. This means that this facility is about 8 times lower in odor production than the industry average. This is the lowest odor emission factor for any windrow compost facility that we tested.

Figure 5.1 Interpolated Windrow Compost Emission Curve.

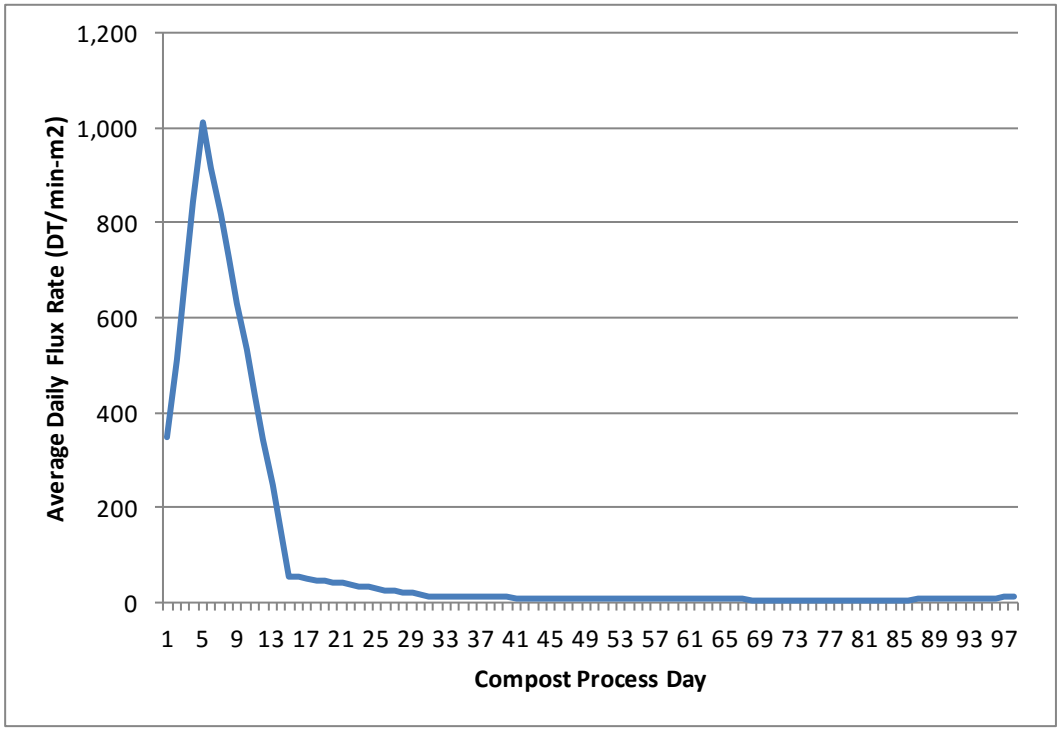

Table 5.5. Summary of Compost Emissions.

	Odor Flux	Area		Emissions
Source	**(DT/min-m2)**	**(ft2)**	**(m2)**	**(DT/min)**
Compost Tipping Pile	14	16,800	1,570	21,654
Compost Chop Pile	1,506	11,400	1,065	1,604,055
Compost Windrows	94	396,346	37,042	3,500,295
Compost Product	4	2,500	234	1,013
Ponds	3.15	105,600	9,869	31,126
Total				5,158,143

APPENDIX C:
COMPOST ODOR IMPACT MINIMIZATION PLAN

Odor Impact Minimization Plan

Western Placer Waste Management Authority

Compost Facility

Revisions:

July 2016

April 2018

Contents

Section Page

1 INTRODUCTION 1
Background 1

2 ODOR IMPACT MINIMIZATION PLAN 2
Odor Monitoring Protocol 2
Meteorological Conditions 4
Complaint Response Protocol 6
Design Considerations for Minimizing Odors 6
Operating Procedures for Minimizing Odors 9
Plan Revision 11

Table

1 Sources of Odor and Possible Management Techniques T-1

Appendices

A CIWMB Regulations regarding OIMP A-1
B Compost Odor Wheel B-1
C Historic Meteorological Information C-1

ODOR IMPACT MINIMIZATION PLAN
Compost Facility

1.0 INTRODUCTION

California Integrated Waste Management Board (CIWMB) regulations, Title 14, CCR Section 17863.4 require that all compostable material handling operations and facilities prepare and maintain a site-specific Odor Impact Minimization Plan (OIMP). The following OIMP has been developed to meet regulatory requirements and to serve as a documentation of site-specific operating procedures designed to minimize the potential for nuisance-level off-site odors.

1.1 BACKGROUND INFORMATION

Project Name:	Western Placer Waste Management Authority Green Material Compost Facility
Project Location:	3033 Fiddyment Road Roseville, CA 95747
Mailing Address:	11476 C Avenue Auburn, CA 95603
Landowner:	Western Placer Waste Management Authority 3033 Fiddyment Road Roseville, CA 95747
Project Contacts:	Eric Oddo, Program Manager Western Placer Waste Management Authority 11476 C Avenue Auburn, CA 95603 916-543-3984
Regulatory Contacts:	Paul Holloway, R.E.H.S Placer County Department of Health & Human Services Environmental Health Division 3091 County Center Drive, Suite 180 Auburn, CA 95603 530-745-2345

2.0 ODOR IMPACT MINIMIZATION PLAN

The following provides specific information on compliance with §17863.4 (b) – (d). The text from Title 14 is presented in *italics* followed by the Facility's proposed method of compliance.

(b) Odor impact minimization plans shall provide guidance to on-site personnel by describing, at a minimum, the following items. If the operator will not be implementing any of these procedures, the plan shall explain why it is not necessary.

2.1 ODOR MONITORING PROTOCOL

(1) an odor monitoring protocol which describes the proximity of possible odor receptors and a method for assessing odor impacts at the locations of the possible odor receptors; and

The closest receptors are WPWMA staff and the operators that work at the compost facility, buy-back facility, MRF, scalehouse, and landfill. On-site staff is the best source of real-time information regarding odors.

One mile south, southeast and southwest of the WRSL property boundary are residential developments referred to as Crocker Ranch and Fiddyment Farm; the composting facility is approximately .7 miles north of the WRSL property boundary. Both developments include residential housing and schools. These are the primary off-site receptors.

Other potential receptors not in the primary path of air movement but also of concern since the wind direction sometimes moves towards these locations in relation to the WPWMA's facilities are established residential neighborhoods approximately 2 miles north of the WPWMA and a casino approximately 1.5 miles to the northeast of the WPWMA. The majority of land within a close proximity of the WPWMA is designated as agriculture/pasture and no residential, commercial, or industrial developments exist, though some are being contemplated for the future.

There are a number of potentially competing odor sources within a reasonable vicinity of the composting facility as well. Approximately 2.5 miles southeast of the WPWMA's composting facility is a composting and soil blending facility (Mallard Creek). The Rio Bravo wood-burning power plant is located approximately 2 miles to the east. Both of these sources stockpile significant amounts of organic materials. These receptor locations are directly in the primary path of the air movement in relation to the WPWMA's compost facility. North of the WPWMA's

composting facility are a chicken farm and a dairy. The aforementioned casino, in addition to being a potential receptor, is also a potential odor source as the facility operates its own on-site wastewater treatment plant.

Approximately 1.5 miles to the east and southeast of the WPWMA are various industrial plants, including a propane dealer.

Please see Figure 1 to see the relationship of the facility to nearby receptors and competing odor sources.

As discussed above, there are a number of potential odor sources on the WPWMA site and in the vicinity:

<u>On-Site</u>
Western Regional Sanitary Landfill
C&D sort line
Material Recovery Facility
LFG to Energy plant (Energy 2001)
Composting Facility

<u>Off-Site</u>
Rio Bravo Wood waste to energy power plant facility
- 1.5 miles southeast of the WPWMA
- 0.35 miles northeast of Crocker Ranch;

Mallard Creek composting facility
- 1.75 miles southeast of the WPWMA
- 0.70 miles east of Crocker Ranch;

Placer Propane – propane dealer
- 1.75 miles southeast of the WPWMA
- 1.0 mile east of Crocker Ranch;

Invirotec –accepts and processes septage
- 1.5 miles northeast of the WPWMA
- 2.0 miles north-northeast of Crocker Ranch;

Thunder Valley Casino WWTP
- 1.5 miles to the east-northeast of the WPWMA
- 2.5 miles to the north-northeast of Crocker Ranch

Chicken farm
- 0.75 miles northwest of the northwestern corner of the WPWMA
- 2.4 miles north-northwest of Crocker Ranch;

Dairy farm
- 2.75 miles west-northwest of the northwestern corner of the WPWMA

- 3.6 miles northwest of Crocker Ranch.

The compost operator evaluates weather conditions, on-site odor conditions and planned operations to minimize the potential release of objectionable odors. These include good composting practices as described in the Report of Composting Site Information (RCSI) (appropriate C:N ratio, sufficient moisture content, adequate porosity, etc.) to minimize production and persistence of odors; and good housekeeping measures (like clearing spilled materials between piles, eliminating areas where water could pond, and maintaining reasonably sized stockpiles of feedstock and finished compost). Additional site-specific odor-minimization practices are detailed in Table 1.

If WPWMA or operator detects an objectionable on-site odor, they will follow the following protocol:

1. Investigate and determine the likely source of the odor.

2. Determine if on-site management practices could remedy the problem and immediately take steps to remedy the situation. Potential odor sources and likely management actions are shown in Table 1.

3. Determine whether or not the odor is traveling beyond the site by patrolling the site perimeter and noting existing wind conditions.

4. Enter observations in an odor log.

DESCRIPTION OF METEOROLOGICAL CONDITIONS

(2) a description of meteorological conditions effecting migration of odors and/or transport of odor causing material off-site. Seasonal variations affect wind velocity and direction shall also be described; and

The geographic proximity of the compost facility is classified as an Intermediate/Semi-Mediterranean climate. It is Mediterranean in the sense that there is a dry season and a wet season. The length of the “wet” and “dry” seasons can be highly variable. Typically rain falls between October and May, and is far less likely in June through September. Average yearly rainfall for the nearby town of Lincoln is 24.62 inches.

Summers are much like coastal Southern California, only slightly warmer, when "Delta" maritime breezes are present. Ocean breezes flow from the southwest to the northeast,

traveling up the Sacramento River delta. Because of the river delta and the absence of coastal mountains blocking ocean maritime breezes, cooling takes place during the normally hot summer months in the Sacramento Valley and Sierra Nevada Foothills. When Delta breezes aren't blowing and the winds come overland from the north, generally hot conditions prevail.

Winters are more characteristic of Oregon and Washington, with rain and fog, but with slightly warmer temperatures due to more southerly latitude. Winter storms can come from three different sources. The first and the most common is the North Pacific Storm which brings rain and fog to the coast, and then through the Sacramento River Delta and up into the foothills. The second type of winter storm comes from the Gulf of Alaska. These are much colder than the North Pacific Storms. The third type of winter storm comes from Canada and is rare. These are very cold and occur when storms manage to make it across Idaho, Montana and Nevada and the barrier mountains to the east, and can result in snowfall as low as the Sacramento Valley floor.

Historical wind directional data has been compiled for the area surrounding the WPWMA. Wind roses for the project area showing the wind speed and direction for each month with direction estimated as emanating from a particular direction are contained in Appendix D. The general direction of the wind during the winter months is to the south-southeast (from the north-northwest) and to the south-southwest (from the north-northeast) in the summer months.

With ambient air as the pathway, three different mechanisms may cause odors to migrate to the surrounding residential areas: inversion, diffusion, and advection.

Inversions are stable atmospheric conditions resulting in limited vertical air movement. Certain atmospheric conditions can cause a temperature inversion to occur, trapping odors near the ground. A temperature inversion is a situation where a warmer body of air is located above a colder air mass, inhibiting the vertical movement of gases. One situation in which a low level, or surface inversion, might take place is on a clear night, when the earth's surface radiates heat away rapidly. If the air is clear, the ground and the air directly above it can be cooler than the air at higher altitudes. In many cases, temperature inversions are most prevalent from the evening to the early morning, which could explain why odors are more prevalent at those times.

Diffusion is the process whereby compounds move from a region of higher concentration to one of a lower concentration. Diffusion could cause odors to be detected even upwind of the Compost Facility. Odors experienced when wind is coming from varying directions could be an indication of diffusion causing dispersion of odors.

The third pathway is *advection*. Odors can be carried long distances by the wind. Based upon review of meteorological data in the vicinity of the Compost Facility, the wind generally blows from the facility toward the residences, indicating that advection may contribute to the dispersion of odors to residential areas.

The facility has an on-site weather station to monitor wind speed and direction, temperature, and other meteorological functions. The on-site weather station is consulted prior to scheduling major material handling activities. Daily records are logged to generate site-specific historical weather pattern information.

COMPLAINT RESPONSE PROTOCOL

(3) a complaint response protocol; and

Facility management will use the following protocol in responding to citizen-reported odor notifications and complaints.

Response to Citizen Complaints

The WPWMA solicits feedback from the public regarding facility odors and provides an Odor Notification Form on its website so that residents can quickly and easily report any experienced odors.

Upon receipt of an odor notification, WPWMA staff will:

1. Check and record weather conditions (especially wind direction) at the time of the notification.

2. Visit the location of the compliant (when possible) and attempt to characterize the odor.

3. If the complainant location is downwind of the WPWMA facility, staff will contact the compost facility operator to verify the operating conditions and activities at the time of the complaint.

4. Staff will document all of the information gathered and potential source (s) of the odor in the Odor Complaint log.

5. Respond to the complainant within 24 hours of receiving the complaint, or within 24 hours of returning from weekends or holidays should the complaint be received during those times.

Upon receipt of a complaint or notification of a complaint by the WPWMA staff, the compost facility operator will:

1. Promptly provide information needed to assess the nature and source of the odor.

2. Consider implementing one or more of the management practices (if deemed feasible, given the time of year, particular source of the odor, etc.) listed in Table 1.

3. Monitor and adjust management practices and report results to WPWMA staff.

4.

DESIGN CONSIDERATIONS FOR MINIMIZING ODORS

(4) a description of design considerations and/or projected ranges of optimal operation to be employed in minimizing odor, including method and degree of aeration, moisture content of materials, feedstock characteristics, airborne emission production, process water distribution, pad and site drainage and permeability, equipment reliability, personnel training, weather event impacts, utility service interruptions, and site specific concerns; and

Method and Degree of Aeration

Green waste windrow composting aeration is largely a function of the particle size of the feedstock, the moisture content and the height of the pile; collectively this is often referred to as "porosity". ASP composting of food waste and other organics uses forced aeration via perforated pipes at the base of the piles that inject air into the piles eliminating the need for turning.

Moisture Content of Materials

Most of the material received consists of mainly woody material (shrubs, trees, bushes, etc.) with a small percentage of materials that have high moisture content, like grass clippings and food waste. It has historically been necessary to add significant amounts of water to maintain the minimum amount of moisture for effective composting.

Feedstock Characteristics

Windrow composting feedstock consists of green material, yard trimmings, and wood waste, as they are defined in 14 CCR §17852. ASP composting feedstock may include source

separated green waste, food waste, and mixed paper or a mix of these and other organic materials recovered from MRF sorting operations.

Airborne Emission Production

The main sources of dust and potential odor-carrying particles at the facility are from material handling, grinding, windrow turning, screening, and traffic. All access roads to the site are paved and properly maintained to minimize dust. Proper moisture management during the composting process also helps to prevent dust generation. Because of these measures, the storage and transfer of feedstock does not increase ambient levels of dust around the site. To the extent possible, dust generating-activities will be scheduled based on wind conditions.

Process Water Distribution

Process water is moved around the site using water trucks. In addition, the windrow turner is equipped with a mechanism to add water directly to the windrows as the piles are turned.

Pad and Site Drainage and Permeability

The MRF drainage system consists of ditches, berms, culverts, a stormwater detention basin and two compost leachate retention basins. With the exception of the compost leachate retention basins, the drainage system is designed to accommodate a 10-year, 12-hour storm per the requirements of the Placer County Stormwater Management Manual. The northern compost retention basin design is based on a 100-year, 24-hour storm event, with no discharge. The southern compost retention basin is designed based on a 500-year, 24-hour storm event, also with no discharge. All non-contact water from the MRF is directed to the stormwater detention basin for eventual discharge off-site. All contact water/leachate from the green and wood waste receiving, processing and storage area is directed to the northern compost retention basin.

The northern compost pad is paved and bisected by a drainage channel which drains the grinding pad and the compost pad into the north leachate pond.

Equipment Reliability

All equipment shall be maintained per manufacturer recommendations. The compost facility has an on-site back up windrow turner. The MRF has additional front-end loaders and manpower that could be directed to the composting operation in the event of an equipment failure.

Personnel Training

Personnel assigned to the compost facility have been trained in subjects applicable to the compost site operation and maintenance, load checking procedures, and heavy equipment operations. Monthly safety meetings occur on various topics to ensure proper and safe

procedures are followed. All heavy equipment operators must go through a training period before they are able to run each piece of machinery (loaders, roll-off, water truck, etc.). The training records and safety meeting attendance are kept on file.

Weather Event Impacts
Inversions are the most likely weather event to impact the facility (see discussion under Meteorological Conditions). Occasional severe rains could limit production at the compost site, but rarely last long enough to severely interrupt operations. The facility can be impacted by peak loads that can arrive after wet periods in the winter. As described in Table 1, the facility has developed contingency measures for these conditions.

The facility is equipped with a recording weather station and also has a prominently displayed windsock to direct on-site operations.

Utility Service Interruptions
Most mobile equipment is powered by diesel engines, with the exception of the horizontal grinder, which is electric. During an extensive outage a contract grinder could be brought in, though this would be an unlikely occurrence. Incoming green material could also be run across the adjacent C&D processing line, which also has an electric grinder.

Water Source
Potable water is available via on-site wells.

OPERATING PROCEDURES TO MINIMIZE ODOR
(5) a description of operating procedures for minimizing odor, including aeration, moisture management, feedstock quality, drainage controls, pad maintenance, wastewater pond controls, storage practices (e.g., storage time and pile geometry), contingency plans (i.e., equipment, water, power, and personnel) weather impacts, biofiltration, and tarping.

The Facility manages all odor-producing areas of the facility to minimize the development of conditions that could lead to odor problems. A key management tool in this effort is the use of a recording weather station and the windsock. Other possible management tools are summarized in Table 1.

Areas with the potential for odor generation include:

Feedstock Receiving Area. Incoming feedstocks can generate odors if they are stored for excessive periods of time, particularly during the rainy season. In order to minimize these potential odors, the Facility will process material regularly and within regulatory limits. Food waste feedstock is introduced into the ASP process immediately upon receipt. Odors from

incoming materials can also be generated upstream of the facility, depending on collection practices (e.g. most curbside greenwaste is collected every other week).

Aisles between Processing Areas. Aisles between processing areas and windrows can be sources of odor if raw, uncomposted, or improperly mixed material is left for excessive amounts of time without being exposed to the high temperatures of composting. The facility practices good housekeeping methods which include regular patrolling of all aisles to clean any spilled materials. Additionally, all surfaces from the receiving area through the composting pads have been designed and graded so that contact water moves efficiently into the leachate ponds, minimizing potential ponding in raw feedstock areas.

Composting Piles. Odors emanating from windrows typically indicate problems in the initial mixing, turning frequency, pile porosity, and/or moisture content of the pile. The operator strives to manage the windrows with appropriate carbon to nitrogen ratio, assure adequate initial mixing, and maintaining adequate moisture within the piles. Piles are turned every 2 to 3 days. Any odors detected from the windrows will be corrected using the techniques described in Table 1.

Odors from ASP are controlled via the biofilter layer consisting of finished compost overs applied over the piles as well as the introduction of air into the piles via perforated pipes.

Curing Piles. Curing piles have the potential to create odors if unstable material is moved to curing too soon. In order to minimize curing odors, the operator will ensure that material is adequately composted prior to moving it into the curing pile.

Storm Water Retention Basin/Compost Leachate Pond.
The compost leachate ponds could cause odors if they were overloaded with sediment or nutrients. The ponds are aerated allowing some volatile particles to be released in a controlled manner.

Aeration
Windrow composting relies on the particle size of the feedstock to allow for natural aeration. The spaces between the particles are referred to as porosity. A rough measure of porosity can be obtained by measuring bulk density. Piles are turned regularly which may help to reestablish porosity. The facility typically strives for a bulk density of 800 pounds per cubic yard in its initial piles.

ASP composting uses forced aeration via perforated pipes at the base of the piles that inject air, eliminating the need for turning.

Moisture Management
The majority of the feedstocks processed at the facility have relatively low moisture content. The site is adequately graded and paved to minimize ponding of water that could lead to odors.

Feedstock Quality
Windrow composting uses only clean, source separated green waste. As commercial hauling collection programs are relatively mature, contamination is relatively low. However, in some cases the frequency of collection can have an impact on odor generation. The operator will work with the green material haulers to identify loads which may have been left sitting for substantial time periods prior to collection and delivery to the facility. When possible these loads should be expedited to assure that they are processed in a timely manner and that the processed material is rapidly incorporated into a windrow.

ASP feedstock may include source separated food and green waste and/or a mixture of organic materials recovered from MRF processing operations. ASP feedstocks are generally more odiferous than the green-only windrow feedstock, thus they are not stored logner than necessary for incorporation into the ASP process and are covered with a biofilter upon pile formation.

Drainage Controls
As discussed above, the facility separates stormwater from "contact" water. Any water that contacts compost feedstock or active compost on the northern compost pad is directed to the central channel drain which bisects the pad and drains to the northern compost leachate pond. The drain could become a source of odors from entrapped sediment if not cleaned out regularly. Any water that contacts compost on the southern pad is directed to the southern compost leachate pond.

Pad Maintenance
The pads are maintained regularly on an as needed basis.

Wastewater Pond Controls
Regular maintenance of the stormwater and leachate ponds should minimize potential odors from these features. The leachate ponds are more likely to be a source of odors, though they are aerated regularly.

Storage Practices
Finished compost ready for sale is stockpiled at the north end of both the northern and southern compost pads and/or on a portion of the green/wood/C&D self-haul tipping area pad. Additionally, small bags of finished compost are manually bagged and marketed. On average, compost is stored for approximately ninety days with an anticipated maximum of six months. If

stored compost accumulates to the point of interference with operations and there is no other alternative, the excess will be used on-site for beneficial purposes or donated to member agencies of the WPWMA for use in parks or landscaping.

CONTINGENCY PLANS

The following provides information on contingency planning for facility equipment, water, power, personnel, weather impacts, and storage.

Equipment. All equipment is maintained per the manufacturer recommendations. The facility has a fulltime mechanic who does scheduled maintenance and repairs on the composting equipment. In the event of equipment breakdown, composting services can be contracted out or equipment could be rented to continue operations. The compost facility has an on-site back up turner and additional front-end loaders are also on-site as part of other operations.

Water. If needed, water could be brought in by tanker truck, but this is an unlikely situation. In the short term the facility could re-use water from either of the retention basins during periods when the regular water supply was interrupted.

Power. Most mobile equipment, except for the horizontal grinder, is powered by diesel engines. During the unlikely event of a prolonged power outage a contract grinder could be contracted to provide grinding services.

Personnel. Additional trained personnel could be made available from other Nortech operations.

Weather impacts. The only severe weather event impacts are heavy rainfall or high wind conditions that could temporarily impede processing activities.

Biofiltration. The windrow composting process may use a "pseudo-biofilter" or "compost blanket" to reduce odors in the initial windrows. This may include adding compost "overs" into the initial compost mix to increase porosity or may include using finished compost as a windrow blanket during the first few weeks. The ASP composting process utilizes a one-foot biofilter comprised of finished compost or compost overs on each pile.

Tarping. WPWMA may use tarps if necessary to assist with odor reduction of compost feedstock.

Storage. Given the current throughput, the facility is limited by the amount of available pad space. Under peak loading conditions, it may be desirable to re-direct processed green material to an off-site location rather than try to force a large throughput through the system. The

operator has identified the potential for off-site receiving locations, such as direct land application of green material.

PLAN REVISION

(c) The odor impact minimization plan shall be revised to reflect any changes, and a copy shall be provided to the enforcement agency, within 30 days of those changes.

A copy of this Odor Impact Minimization Plan will be kept at the facility's on-site administration office. The OIMP will be revised to reflect significant changes to operations that affect the OIMP.

TABLES

Table 1, describing sources of possible odor and potential management techniques, follows this page. The mitigation measures contained in Table 1 are not necessarily cumulative, i.e., not all measures will be implemented simultaneously. It will be up to the operator to determine the applicability of a given technique to a given situation.

Table 1
Sources of Odor and Possible Management Techniques

Source of Odor	Possible cause	Management approach
Feedstock receiving	Material sitting too long prior to processing	Reduce size of processed material stockpiles. Create discrete feedstock stockpiles with greater surface to volume ratio. Consider blanketing odiferous materials with one-foot layer of woody overs (water lightly to reduce odor releases).
Feedstock receiving	Material arrives with odors	Expedite material processing. Develop load-specific handling measures Consider blanketing odiferous materials with one-foot layer of woody overs (water lightly to reduce odor releases). Develop alternative processing option for odiferous loads. Consider treating odiferous loads with an odor neutralizer added to the water truck or otherwise sprayed on.
Material processing (Grinding)	Grinding volatizes particles	Expedite material processing. Increase operating shifts or grinder capacity. First in, first out, processing. Consider using odor neutralizer in the water spray for the grinder. Use the weather station, windsock, and/or operational experience to curtail grinding operations during unfavorable weather conditions.
Processed material storage	Storing processed materials for extended periods can cause odors.	Move processed material to a windrow within 48 hours. Stockpile woody overs for use in adjusting porosity and/or for blanketing material stockpiles and/or windrows.

Table 1 (Continued)
Sources of Odor and Possible Management Techniques

Source of Odor	Possible cause	Management approach
Material Handling (during composting)	Material handling releases odorous gases. Anaerobic conditions can form odorous compounds. Ammonia odor (high nitrogen level). Sulfur odor (anaerobic conditions). Varying odors in pile. Odors generated after turning. Excessive temperature.	Reduce handling activities during stagnant air conditions. Check and correct carbon to nitrogen ratio and porosity in windrows. Maintain adequate moisture in piles. Avoid over-watering piles. Increase turning frequency, check temperatures, check pH, increase porosity, increase additive. Increase surface to volume ratios of active piles. Consider using “Pseudo-biofilter” to reduce emissions.
Material Handling (Turning)	Turning releases odorous gases and volatizes particles	Reduce or avoid turning activities during stagnant weather conditions. Reduce turning activities when light winds are in the direction of sensitive receptors Consider adding an odor neutralizer to the water truck to be used as a topical odor neutralizer (after windrows are turned) and/or into the windrow via the turner.
Curing piles	Excessive temperatures	Decrease curing pile size (height). Increase compost residence time prior to moving to curing. Review moisture content of in-process compost. Use passive aeration to add oxygen to the curing pile

Table 1 (Continued)
Sources of Odor and Possible Management Techniques

Source of Odor	Possible cause	Management approach
Material processing (Screening)	Screening volatizes particles.	Reduce screening activity during stagnant air conditions. Reduce screening activity when wind is in direction of sensitive receptors. Mist water or neutralizer at dust generation points.
Aisles	Storm water allowed to pond Uncomposted material in aisles	Clean or sweep aisles of spilled material. (Particularly at the end of each day). Remove and replace woody overs and spilled materials from the pad on a regular basis. Mechanically sweep paved areas at the end of each day. Apply water and/or neutralizer to reduce dust conditions.
Drainage channel	Channel can become saturated and overloaded with sediment	Increase cleaning frequency of the drainage channel Install filter socks at the upstream end of the windrow pad, especially during the rainy season.
Leachate ponds	Standing water overloaded with nutrients or sediment	Install filter berm before ponds. Consider increasing aeration and/or chlorinating as necessary. Clean leachate ponds during the dry season.

Appendix A
CIWMB REGULATIONS REGARDING OIMPs

California Integrated Waste Management Board (CIWMB) regulations regarding Odor Impact Minimization Plans follow this page.

COMPOSTABLE MATERIALS HANDLING OPERATIONS AND FACILITIES REGULATORY REQUIREMENTS

April 4, 2003

Chapter 3.1 Compostable Materials Handling Operations and Facilities Regulatory Requirements

Article 1. General

Section 17863.4. Odor Impact Minimization Plan.

(a) All compostable material handling operations and facilities shall prepare, implement and maintain a site-specific odor impact minimization plan. A complete plan shall be submitted to the EA with the EA Notification or permit application.
(b) Odor impact minimization plans shall provide guidance to on-site operation personnel by describing, at a minimum, the following items. If the operator will not be implementing any of these procedures, the plan shall explain why it is not necessary.
(1) an odor monitoring protocol which describes the proximity of possible odor receptors and a method for assessing odor impacts at the locations of the possible odor receptors; and,
(2) a description of meteorological conditions effecting migration of odors and/or transport of odor-causing material off-site. Seasonal variations that effect wind velocity and direction shall also be described; and,
(3) a complaint response protocol; and,
(4) a description of design considerations and/or projected ranges of optimal operation to be employed in minimizing odor, including method and degree of aeration, moisture content of materials, feedstock characteristics, airborne emission production, process water distribution, pad and site drainage and permeability, equipment reliability, personnel training, weather event impacts, utility service interruptions, and site specific concerns; and,
(5) a description of operating procedures for minimizing odor, including aeration, moisture management, feedstock quality, drainage controls, pad maintenance, wastewater pond controls, storage practices (e.g., storage time and pile geometry), contingency plans (i.e., equipment, water, power, and personnel), biofiltration, and tarping.
© The odor impact minimization plan shall be revised to reflect any changes, and a copy shall be provided to the EA, within 30 days of those changes.
(d) The odor impact minimization plans shall be reviewed annually by the operator to determine if any revisions are necessary.
(e) The odor impact minimization plan shall be used by the EA to determine whether or not the operation or facility is following the procedures established by the operator. If the EA determines that the odor impact minimization plan is not being followed, EA may issue a Notice and Order (pursuant to section 18304) to require the operator to either comply with the odor impact minimization plan or to revise it.
(f) If the odor impact minimization plan is being followed, but odor impacts are still occurring, the EA may issue a Notice and Order (pursuant to section 18304) requiring the operator to take additional reasonable and feasible measures to minimize odors.

Authority cited: Sections 40502, 43020, 43021 and 43209.1 of the Public Resources Code
Reference: Sections 43020, 43021 and 43209.1 of the Public Resources Code.

Appendix B
COMPOST ODOR WHEEL

A Compost Odor Wheel, used to help determine the nature and therefore the cause of typical compost odors follows this page.

Appendix C
HISTORIC WIND INFORMATION

Historic wind speed and direction for the Compost Site follows this page.

APPENDIX D:
ODOR RISK FORECASTING TOOL

Odor Risk

Daily Risk

Site: Western Placer Waste Management Authority - Western Regional Sanitary Landfill

Report Issued: Aug 15, 2019 5:30 AM

Report Period: Shift starting Aug 14, 2019 6:00 PM

No Data | None | Low | Moderate | High | Extreme

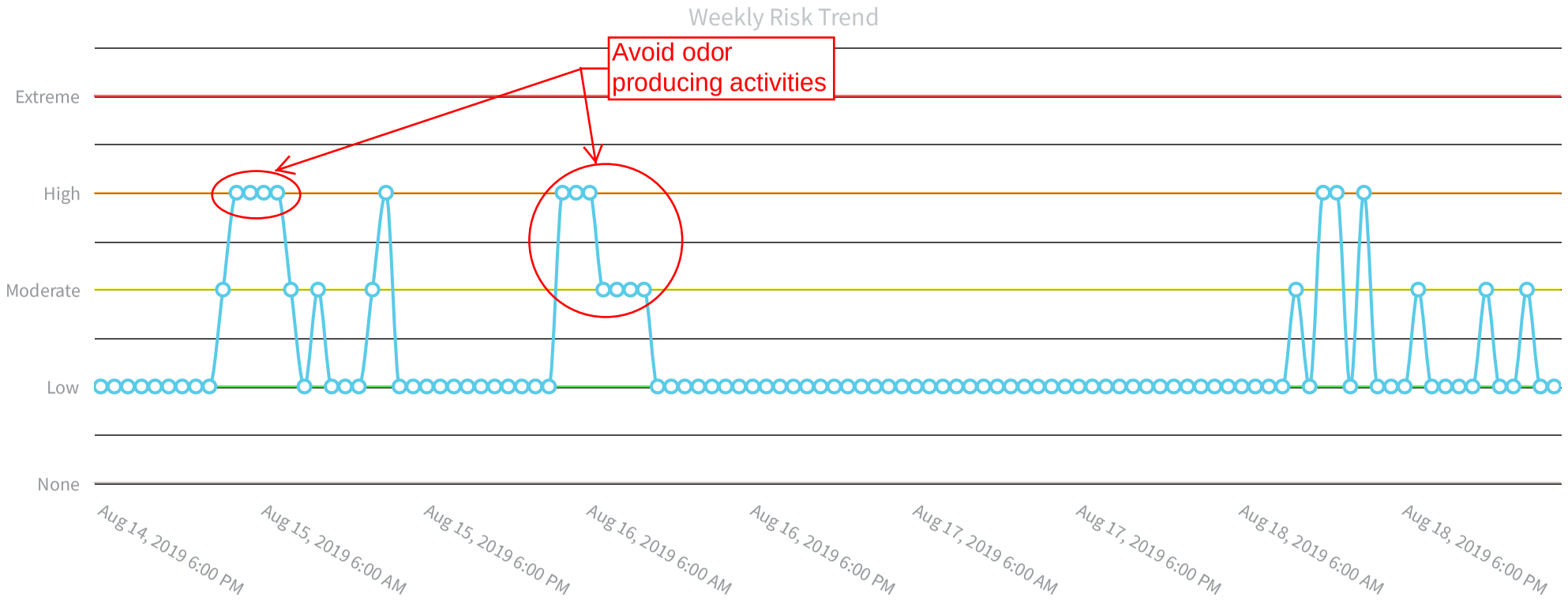

Night Shift - Wednesday

Aug 14, 2019 6:00 PM - Aug 15, 2019 6:00 AM

Hours	18 - 19	19 - 20	20 - 21	21 - 22	22 - 23	23 - 00	00 - 01	01 - 02	02 - 03	03 - 04	04 - 05	05 - 06
Risk	Low	Low	Low	Low	Low	Low	Low	Low	Low	Moderate	High	High
Wind Direction	SW	S	S	SE	SE	E	SE	SE	SE	E	N	N
Mixing Height (m)	46.96	23.27	23.20	26.24	46.70	130.58	123.59	86.62	34.33	22.43	44.33	22.20
Temperature (°F)	89.37	83.32	80.86	75.37	73.82	74.15	70.87	68.76	67.21	67.92	63.27	62.52
Wind Speed (mph)	4.91	3.84	3.26	5.66	6.48	8.60	6.89	5.31	5.56	1.49	5.27	5.07
Rainfall (mm)	--	--	--	--	--	--	--	--	--	--	--	--

Alerts

Wednesday 18:00 - Thursday 03:00: Low odor risk
Thursday 03:00 - 04:00: Low speed winds are causing a moderate odor risk
Thursday 04:00 - 06:00: High odor risk due to winds blowing towards town

Day Shift - Thursday

Aug 15, 2019 6:00 AM - Aug 15, 2019 6:00 PM

Hours	06 - 07	07 - 08	08 - 09	09 - 10	10 - 11	11 - 12	12 - 13	13 - 14	14 - 15	15 - 16	16 - 17	17 - 18
Risk	High	High	Moderate	Low	Moderate	Low	Low	Low	Moderate	High	Low	Low
Wind Direction	N	N	W	NW	W	W	W	W	NW	NW	W	W
Mixing Height (m)	32.09	47.37	99.42	214.96	320.04	442.11	496.21	579.25	678.45	810.26	536.20	99.33
Temperature (°F)	61.38	66.02	72.66	77.93	83.67	86.51	90.15	92.28	94.77	97.09	95.36	95.08
Wind Speed (mph)	3.73	3.01	2.71	4.69	2.95	6.15	5.11	5.21	2.80	2.45	7.07	4.28
Rainfall (mm)	--	--	--	--	--	--	--	--	--	--	--	--

Alerts

Thursday 06:00 - 08:00: High odor risk due to winds blowing towards town
Thursday 08:00 - 09:00: Low speed winds are causing a moderate odor risk
Thursday 09:00 - 10:00: Low odor risk
Thursday 10:00 - 11:00: Low speed winds are causing a moderate odor risk
Thursday 11:00 - 14:00: Low odor risk
Thursday 14:00 - 15:00: Low speed winds are causing a moderate odor risk
Thursday 15:00 - 16:00: High odor risk due to winds blowing towards town
Thursday 16:00 - 18:00: Low odor risk

Avoid odor producing activities due to 3 continuous hour period of "high" odor risk. (See previous page for start of "high" risk period.)

Night Shift - Thursday

Aug 15, 2019 6:00 PM - Aug 16, 2019 6:00 AM

Hours	18 - 19	19 - 20	20 - 21	21 - 22	22 - 23	23 - 00	00 - 01	01 - 02	02 - 03	03 - 04	04 - 05	05 - 06
Risk	Low	Low	Low	Low	Low	Low	Low	Low	Low	Low	High	High
Wind Direction	SW	S	SE	SE	SE	E	SE	S	SE	E	NE	N
Mixing Height (m)	49.23	23.28	23.11	55.71	86.33	185.50	129.77	89.84	40.97	22.47	45.88	22.35
Temperature (°F)	90.39	84.13	79.29	76.18	74.67	75.78	71.50	69.16	67.20	66.73	64.18	64.15
Wind Speed (mph)	4.40	3.62	4.72	7.20	6.95	10.73	6.48	5.95	5.59	4.57	6.36	5.80
Rainfall (mm)	--	--	--	--	--	--	--	--	--	--	--	--

Alerts

Thursday 18:00 - Friday 04:00: Low odor risk

Friday 04:00 - 06:00: High odor risk due to winds blowing towards town

Day Shift - Friday

Aug 16, 2019 6:00 AM - Aug 16, 2019 6:00 PM

Hours	06 - 07	07 - 08	08 - 09	09 - 10	10 - 11	11 - 12	12 - 13	13 - 14	14 - 15	15 - 16	16 - 17	17 - 18
Risk	High	Moderate	Moderate	Moderate	Moderate	Low	Low	Low	Low	Low	Low	Low
Wind Direction	N	SE	W	W	W	W	W	W	W	W	W	W
Mixing Height (m)	22.28	35.16	124.04	289.80	487.19	620.08	646.72	680.19	904.73	907.91	731.59	263.94
Temperature (°F)	63.94	67.81	74.40	79.39	83.80	86.26	90.51	92.47	94.73	95.52	94.18	92.88
Wind Speed (mph)	3.83	1.61	1.41	2.75	2.67	3.18	3.75	4.62	4.48	5.24	6.57	4.32
Rainfall (mm)	--	--	--	--	--	--	--	--	--	--	--	--

Alerts

Friday 06:00 - 07:00: High odor risk due to winds blowing towards town
Friday 07:00 - 11:00: Low speed winds are causing a moderate odor risk
Friday 11:00 - 18:00: Low odor risk

Avoid odor producing activities due to a 6 hour (or more) continuous time period of "moderate" (or worse) odor risk. (See previous page for start of "moderate" or worse risk period.)

Night Shift - Friday

Aug 16, 2019 6:00 PM - Aug 17, 2019 6:00 AM

Hours	18 - 19	19 - 20	20 - 21	21 - 22	22 - 23	23 - 00	00 - 01	01 - 02	02 - 03	03 - 04	04 - 05	05 - 06
Risk	Low	Low	Low	Low	Low	Low	Low	Low	Low	Low	Low	Low
Wind Direction	S	S	SE	SE	SE	SE	SE	S	S	SE	S	SE
Mixing Height (m)	50.84	71.92	150.53	135.85	155.54	222.49	168.87	172.71	290.21	165.28	137.52	77.39
Temperature (°F)	89.26	82.74	77.80	75.21	73.35	72.92	69.89	67.44	65.60	62.71	61.17	59.94
Wind Speed (mph)	4.15	5.02	4.06	7.58	9.15	10.84	10.10	10.43	11.25	5.55	6.16	3.58
Rainfall (mm)	--	--	--	--	--	--	--	--	--	--	--	--

Alerts

Friday 18:00 - Saturday 06:00: Low odor risk

Day Shift - Saturday

Aug 17, 2019 6:00 AM - Aug 17, 2019 6:00 PM

Hours	06 - 07	07 - 08	08 - 09	09 - 10	10 - 11	11 - 12	12 - 13	13 - 14	14 - 15	15 - 16	16 - 17	17 - 18
Risk	Low	Low	Low	Low	Low	Low	Low	Low	Low	Low	Low	Low
Wind Direction	S	S	S	SW	SW	S	S	S	SW	SW	SW	SW
Mixing Height (m)	95.84	71.66	205.62	457.26	691.83	793.17	926.64	994.66	1038.81	1031.80	890.86	419.16
Temperature (°F)	59.83	64.10	68.22	72.47	77.64	81.57	84.21	85.12	85.99	87.26	86.43	84.67
Wind Speed (mph)	4.43	5.20	6.67	3.94	3.04	8.03	8.17	11.98	7.81	7.12	7.36	8.94
Rainfall (mm)	--	--	--	--	--	--	--	--	--	--	--	--

Alerts

Saturday 06:00 - 18:00: Low odor risk

Night Shift - Saturday

Aug 17, 2019 6:00 PM - Aug 18, 2019 6:00 AM

Hours	18 - 19	19 - 20	20 - 21	21 - 22	22 - 23	23 - 00	00 - 01	01 - 02	02 - 03	03 - 04	04 - 05	05 - 06
Risk	Low	Low	Low	Low	Low	Low	Low	Low	Low	Low	Low	Low
Wind Direction	SW	SW	S	S	SE	S	SE	S	S	S	SE	SE
Mixing Height (m)	62.91	27.04	319.23	67.29	339.14	410.00	439.97	368.24	378.23	195.34	149.25	49.74
Temperature (°F)	80.62	76.08	73.13	68.56	66.93	62.40	60.32	59.19	58.82	58.58	59.30	59.92
Wind Speed (mph)	8.27	10.10	13.06	9.14	7.60	14.52	12.32	10.31	9.94	11.59	7.77	4.36
Rainfall (mm)	--	--	--	--	--	--	--	--	--	--	--	--

Alerts

Saturday 18:00 - Sunday 06:00: Low odor risk

Day Shift - Sunday

Aug 18, 2019 6:00 AM - Aug 18, 2019 6:00 PM

Hours	06 - 07	07 - 08	08 - 09	09 - 10	10 - 11	11 - 12	12 - 13	13 - 14	14 - 15	15 - 16	16 - 17	17 - 18
Risk	Low	Low	Low	Low	Moderate	Low	High	High	Low	High	Low	Low
Wind Direction	SE	S	S	S	SW	NW	NW	NW	W	NW	W	NW
Mixing Height (m)	255.35	287.72	495.73	532.39	769.66	929.97	925.92	903.57	846.37	955.45	950.34	819.55
Temperature (°F)	58.29	60.63	63.29	64.93	69.80	73.26	75.63	77.16	79.58	80.48	80.63	80.59
Wind Speed (mph)	4.51	3.37	4.15	3.41	1.89	5.38	4.46	7.66	5.18	8.34	4.99	4.74
Rainfall (mm)	--	--	--	--	--	--	--	--	--	--	--	--

Alerts

Sunday 06:00 - 10:00: Low odor risk
Sunday 10:00 - 11:00: Low speed winds are causing a moderate odor risk
Sunday 11:00 - 12:00: Low odor risk
Sunday 12:00 - 14:00: High odor risk due to winds blowing towards town
Sunday 14:00 - 15:00: Low odor risk
Sunday 15:00 - 16:00: High odor risk due to winds blowing towards town
Sunday 16:00 - 18:00: Low odor risk

Night Shift - Sunday

Aug 18, 2019 6:00 PM - Aug 19, 2019 6:00 AM

Hours	18 - 19	19 - 20	20 - 21	21 - 22	22 - 23	23 - 00	00 - 01	01 - 02	02 - 03	03 - 04	04 - 05	05 - 06
Risk	Low	Moderate	Low	Low	Low	Low	Moderate	Low	Low	Moderate	Low	Low
Wind Direction	SW	W	SW	S	SE	SE	S	SW	SW	SE	S	--
Mixing Height (m)	68.73	60.55	232.63	191.73	200.07	240.66	22.28	89.46	120.59	86.33	113.56	--
Temperature (°F)	78.16	74.03	71.67	68.72	66.33	63.17	63.42	61.15	59.77	59.15	57.89	--
Wind Speed (mph)	6.65	2.95	8.34	8.75	4.67	5.87	2.46	4.07	4.87	2.13	5.20	--
Rainfall (mm)	--	--	--	--	--	--	--	--	--	--	--	--

Alerts

Sunday 18:00 - 19:00: Low odor risk
Sunday 19:00 - 20:00: Low speed winds are causing a moderate odor risk
Sunday 20:00 - Monday 00:00: Low odor risk
Monday 00:00 - 01:00: Low speed winds are causing a moderate odor risk
Monday 01:00 - 03:00: Low odor risk
Monday 03:00 - 04:00: Low speed winds are causing a moderate odor risk
Monday 04:00 - 05:00: Low odor risk

APPENDIX E:
ODOR INVESTIGATION SUMMARY REPORT TEMPLATE

On- and Off-Site Odor Monitoring Event Summary

Date		Prepared by:	
Observed weather conditions			

Off-Site Location Notes

Location	A: Fiddyment Farms Elementary		
Time		Noticeable Odor: Y / N	Odor Intensity: N/A 1 2 3 4 5
Notes:			
Location	B: Fiddyment Road and Settlers Ridge		
Time		Noticeable Odor: Y / N	Odor Intensity: N/A 1 2 3 4 5
Notes:			
Location	C: Mel Hamel Park		
Time		Noticeable Odor: Y / N	Odor Intensity: N/A 1 2 3 4 5
Notes:			
Location	D: Verrazona Drive and Vignolia Loop		
Time		Noticeable Odor: Y / N	Odor Intensity: N/A 1 2 3 4 5
Notes:			
Location	E: Leonard Davis Park		
Time		Noticeable Odor: Y / N	Odor Intensity: N/A 1 2 3 4 5
Notes:			
Location	F: Greywood Circle		
Time		Noticeable Odor: Y / N	Odor Intensity: N/A 1 2 3 4 5
Notes:			

On- and Off-Site Odor Monitoring Event Summary (continued)

Location	G: Blue Oaks Theatres		
Time		Noticeable Odor: Y / N	Odor Intensity: N/A 1 2 3 4 5
Notes:			
Location	H: Kathy Lund Park		
Time		Noticeable Odor: Y / N	Odor Intensity: N/A 1 2 3 4 5
Notes:			
Location	I: William Jessop University		
Time		Noticeable Odor: Y / N	Odor Intensity: N/A 1 2 3 4 5
Notes:			
Location	J: Whitney Highschool		
Time		Noticeable Odor: Y / N	Odor Intensity: N/A 1 2 3 4 5
Notes:			
Location	K: Kaiser Lincoln		
Time		Noticeable Odor: Y / N	Odor Intensity: N/A 1 2 3 4 5
Notes:			
Location	L: Pete Demas Park		
Time		Noticeable Odor: Y / N	Odor Intensity: N/A 1 2 3 4 5
Notes:			

Comparison of Field Observations to Odor Dispersion Model Estimates

Notes:

APPENDIX F:
LFG AND LEACHATE MANAGEMENT SOP

LANDFILL GAS and LEACHATE MANAGEMENT

STANDARD OPERATING PROCEDURES

This document identifies the procedures for conducting operations and maintenance of landfill gas collection and control systems at the Western Regional Sanitary Landfill in compliance with regulatory obligations in a timely and safe manner.

Version **DRAFT**

Date: July 2020

DRAFT

Table of Contents **Page #**

SECTION 1 Introduction 1-1
1.1 Goals 1-1
1.2 Site-Specific Variances 1-1
1.3 Procedures for Requesting Site-Specific SOP Variances 1-2
1.4 SOP Updates 1-2
1.5 Disclaimer 1-2

SECTION 2 General Information 2-3
2.1 Format of SOP 2-3
2.2 Health and Safety 2-3
2.3 Qualifications and General Requirements 2-3
2.3.1 Self-Performance of Work 2-3
2.3.2 Work by Trained and Certified Personnel 2-3
2.3.3 Skills and Knowledge 2-4
2.4 GCCS Emergencies 2-5
2.4.1 Notification to WPWMA Personnel 2-5
2.4.2 Regulatory Notification 2-5
2.4.3 Press/News Agencies 2-5
2.5 Contact Call Tree for GCCS Emergencies 2-5

SECTION 3 GCCS Operating Goals 3-1
3.1 Definitions 3-1
3.2 Vacuum Set Point 3-1
3.2.1 Goal of Vacuum Set Point 3-1
3.2.2 Changing the Vacuum Set Point 3-2
3.3 NSPS/EG Thresholds and WPWMA SOP Targets 3-2
3.4 Establishing Site-Specific Operating Limits 3-3
3.4.1 Management of Regulatory HOVs 3-3
3.4.2 Temporary Alternate Operating Limits 3-4
3.4.3 Permanent Alternate Operating Limits 3-4

SECTION 4 Wellfield Operation, Monitoring, and Tuning 4-1
4.1 Overview and General Principles 4-1
4.2 DATA TAGS 4-1
4.3 Identification of Wells and Probes Requiring Monitoring 4-2
4.4 Monitoring Equipment Minimum Standards 4-2
4.5 Monitoring Point Naming and Standard Comments 4-3
4.5.1 Calibration Reading IDs 4-3

4.5.2 Prime Mover Inlet and Outlet IDs 4-3
4.5.3 Inlet and Outlet of Each Blower IDs 4-3
4.5.4 Flame Arrestor Inlet and Outlet IDs 4-4
4.5.5 Greenhouse Gas Monitoring IDs 4-4
4.5.6 Replacement/Redrilled Wells 4-4
4.5.7 Allowable Comments 4-4
4.6 Vacuum Set Point and BLoWER/FLARE STATION Operation 4-5
4.7 Wellfield Component Integrity Checks 4-6
4.7.1 Survey Stakes or Poles 4-7
4.7.2 LFG Well and Collector Integrity 4-7
4.7.3 Valves and Condensate Management System Integrity 4-8
4.8 Wellfield Monitoring 4-8
4.8.1 Monitoring Schedule and Tuning Frequency 4-9
4.8.2 Conditions Required for Wellfield Monitoring 4-10
4.8.3 Field Monitoring Equipment Calibrations 4-10
4.8.4 Blower/Flare Station Monitoring 4-11
4.8.5 Wellhead Monitoring 4-11
4.8.6 Initial Wellhead Measurements 4-11
4.8.7 Adjusted Wellhead Measurements 4-13
4.8.8 Corrective Action Documentation and Rechecks 4-13
4.8.9 120-Day Exceedance Clock 4-14
4.8.10 Additional Monitoring Required 4-14

SECTION 5 Greenhouse Gas Monitoring 5-1

SECTION 6 Blower/Flare Stations 6-1
6.1 Operating Philosophy 6-1
6.2 Monitoring Minimum Requirements 6-2
6.3 Priority of Data Recorders 6-4
6.3.1 Remote Data Acquisition Systems 6-5
6.4 Restriction on Modifying Control Panels 6-5

SECTION 7 SUBSURFACe Gas Migration Monitoring 7-1
7.1 General 7-1
7.2 Site-Specific Monitoring Requirements 7-1
7.3 Monitoring Probe Construction 7-1
7.4 Timeline for Monitoring 7-2
7.5 Monitoring Procedures 7-2
7.5.1 On-Site Structure Monitoring 7-2
7.5.2 Probe Monitoring 7-3
7.6 Reporting 7-3

SECTION 8 Surface Emissions Monitoring 8-1

SECTION 9 Liquid Level Measurements 9-2
9.1 Overview of Liquid Level Evaluation Process 9-2
9.1.1 Basis of Calculations 9-2
9.2 Measurement Frequency 9-2
9.3 Equipment Specifications 9-3
9.4 Preparation 9-3
9.5 Liquid Measurement Procedure 9-3
9.6 Data Management 9-4
9.6.1 Site Build/As-Built Data 9-4
9.6.2 Field Measurements and Related Data 9-4

SECTION 10 Startup Procedures for New LFG Collectors 10-1
10.1 New LFG Collector Installation and Startup 10-1
10.1.1 Replacement Wells/Collectors 10-1
10.1.2 Startup Procedure for New Collectors 10-1
10.2 New GCCS Startup 10-2

SECTION 11 Data Management, Handling, and Reporting 11-4
11.1 Data Management and Handling 11-4
11.1.1 Data Management Responsibilities 11-4
11.1.2 Data Handling 11-4
11.1.3 Electronic Data 11-5
11.1.4 Written Log Book Data 11-5
11.1.5 Data Review 11-6
11.1.6 Data Approval 11-6
11.2 Reporting and Meetings 11-7
11.2.1 Daily Logs 11-7
11.2.2 Monthly Reports 11-7
11.2.3 Quarterly Reports 11-8
11.2.4 Monthly SOP Meetings 11-8
11.3 SSM Documentation 11-9

SECTION 12 Subsurface Oxidation Events 12-1
12.1 Symptoms 12-1
12.2 Notification 12-1
12.3 Initial Investigation 12-1
12.4 Data Analysis 12-2
12.5 Removing Sources of Oxygen 12-3
12.6 Things to Avoid 12-3

12.7 Continued Monitoring 12-4
12.8 Repairs 12-4
12.9 Timeline 12-4

SECTION 13 GCCS Inspection and Maintenance 13-1
13.1 Component Integrity Checks 13-1
13.2 Temporary Repairs 13-1
13.3 Cover Integrity and Well Inspection (MOnthly) 13-1
13.3.1 Cover Integrity 13-1
13.3.2 Well Casings 13-2
13.4 Control Device System Operation 13-2
13.5 Monthly Inspection and Maintenance 13-2
13.6 Quarterly Inspection and Maintenance 13-6
13.7 Semi-Annual Inspection and Maintenance 13-7
13.8 Annual Maintenance 13-7
13.9 Spare Parts 13-8
13.9.1 Control System 13-8
13.9.2 Collection System 13-8

SECTION 14 14-1
Leachate Collection System OPerations 14-1
14.1.1 Pump Operation 14-1
14.1.2 Liquid level monitoring 14-1
14.1.3 Force Main Inspections 14-2
14.1.4 Flow meter monitoring and inspections 14-2
14.1.5 Monthly Monitoring of Leachate Water Quality 14-2
14.1.6 Annual LCRS Performance Testing 14-3

ABBREVIATIONS AND DEFINITIONS

Because it is common for state or local regulatory agencies to be delegated authority from U.S. EPA to implement federal environmental regulations, each state or local agency may define applicable terms differently or have different interpretations of how a Rule is to be implemented. Because of the wide variation that exists among agencies, specific definitions and interpretations are not addressed. It is the responsibility of the OM&M Provider to be aware of definitions and interpretations of Rules used by state or local agencies and to apply them appropriately, including the use of the following terms which, for purposes of this document, have these meanings:

Abandoned Well	An extraction well permanently removed from GCCS
ACO	Alternative Compliance Option(s)
APCD	Placer County Air Pollution Control District
CPVC	Chlorinated polyvinyl chloride pipe
Decommissioned Well	An extraction well that is temporarily removed from GCCS
EG	State Emission Guidelines for Municipal Solid Waste Landfills
GCCS	Gas collection and control system (landfill gas management system)
HASP	Health and Safety Plan
HDPE	High Density Polyethylene Pipe
Landfill Operations Manager	Person responsible for landfill operations - Other titles typically assigned to this individual include: General Manager, Site Manager, Operations Manager
LFG	Landfill gas
LFGE	Landfill Gas to Energy Facility
NSPS	New Source Performance Standards for Municipal Solid Waste Landfills
OM&M	GCCS operation, maintenance, and monitoring
OM&M Provider	Personnel responsible for the Operations and Maintenance of the GCCS. This term is used for internal WPWMA Environmental Technicians, Specialists, and management team and OM&M contractors.
OSHA	Occupational Safety and Health Agency
Prime Mover	Fan, blower, compressor or similar device used to generate negative pressure on the landfill gas collection system
PVC	Polyvinyl Chloride Pipe
SCADA	Supervisory Control and Data Acquisition
SEM	Surface Emissions Monitoring
SOP	Landfill gas management Standard Operating Procedures as described in this document
SOW	Site-specific scope of work for GCCS OM&M services
SSM	Startup, Shutdown and Malfunction
SWANA	Solid Waste Association of North America
WPWMA	Western Placer Waste Management Authority
WPWMA LFG Operations Manager	WPWMA staff representative(s) designated by the WPWMA to oversee the GCCS and LCRS operation

Terms not defined above shall have the meaning expressly defined in the body of this document.

SECTION 1
INTRODUCTION

This document presents the standard operating procedures (SOP) and minimum operation, maintenance, and monitoring (OM&M) efforts required of those parties responsible for performing landfill gas collection and control system (GCCS) management and leachate collection and recovery system (LCRS) OM&M services at the Western Regional Waste Management Authority (WPWMA) landfill. The procedures and guidelines apply to WPWMA employees and consultants and contractors providing GCCS OM&M services.

This document includes the procedures and minimum requirements for:

- Monitoring, inspection, and maintenance of GCCS and LCRS system components and ancillary equipment;
- Monitoring, inspection, and maintenance of blower stations and LFG control devices (flares, etc.);
- Data management; and
- Reporting related to GCCS and LCRS management.

1.1 GOALS

The WPWMA is committed to complying with federal, state, and local regulations related to LFG management and to being a good neighbor by controlling odor and subsurface migration of explosive gases that could potentially impact the surrounding community. To accomplish these goals and other goals, the WPWMA has adopted a stringent program for operating the GCCS and LCRS. This program may require effort above and beyond that which WPWMA is obligated to perform under applicable permits or regulations. The objective of this effort is to operate the GCCS in a proactive manner before issues arise that might otherwise demand immediate attention and/or substantial cost to remedy.

To ensure consistent and reliable GCCS operation, meet regulatory requirements, and be a good neighbor in the community, the GCCS must be operated with the following goals in mind:

- Meet and/or exceed the requirements of the federal New Source Performance Standards (NSPS) and Emission Guidelines (EG).
- Operate within the limits and guidelines of WPWMA's SOP.
- Control fugitive odors and surface emissions.
- Control subsurface LFG migration.
- Avoid negative groundwater impacts from LFG.
- Operate the GCCS using best industry practices in a professional and safe manner.
- Operate the GCCS to maximize the flow and methane content to the abatement devices

1.2 SITE-SPECIFIC VARIANCES

Site conditions and permit requirements may necessitate future site-specific revisions or modifications. Therefore, modifications may be requested with appropriate approvals of those changes by WPWMA's Manager, Landfill Gas Operations.

1.3 PROCEDURES FOR REQUESTING SITE-SPECIFIC SOP VARIANCES

If variances to the SOP are warranted to address updated conditions or permit requirements and not just as a matter of convenience, the process outlined below may be followed. Modifications will be considered and must be approved by WPWMA LFG Operations Manager.

At a minimum, a request for an SOP variance shall include:

A. The original SOP statement, condition, or procedure redlined to illustrate the proposed changes.

B. Engineering evaluation and supporting documentation that justifies the change, including:

1. Engineering evaluation of the GCCS illustrating that changing the SOP, system or equipment would be beneficial, that the SOP cannot be met and is outside the control of the OM&M Provider and cannot be resolved through appropriate system or equipment modifications.
2. Minimum of six months of data, testing information, or engineering calculations supporting the proposed change.
3. Analysis showing that the proposed change does not impact any WPWMA goals or regulatory obligations.

1.4 SOP UPDATES

This SOP may be modified as new technology, methods, and procedures related to landfill gas management are adopted. Suggestions for changes should be directed to WPWMA's Manager, Landfill Gas Operations.

1.5 DISCLAIMER

Nothing presented in this document grants permission to any party engaged in GCCS OM&M services at the WPWMA facility to violate federal, state, or local laws, regulations, permits, ordinances, or consent orders while conducting the services.

SECTION 2
GENERAL INFORMATION

2.1 FORMAT OF SOP

Imperative and abbreviated language is used in the SOP that is directed at the party performing the OM&M services unless specifically noted otherwise. Note that whether stated imperatively or otherwise, all requirements must be met unless an approved variance is granted.

For incomplete sentences, the reader should insert "shall", "OM&M Provider shall", or similar mandatory phrases by inference.

2.2 HEALTH AND SAFETY

All WPWMA personnel performing work on LFG management systems shall abide by WPWMA health and safety policies and shall participate in WPWMA's general safety training and supplemental training specifically related to landfill gas and leachate management. Each contractor, including the WPWMA GCCS and LCRS OM&M Provider(s) shall file with the WPWMA their own corporate and project-specific health and safety plans (HASP) prior to the commencement of work at any site, and abide by it.

2.3 QUALIFICATIONS AND GENERAL REQUIREMENTS

OM&M technicians are critical to the proper functioning of the GCCS. In order to ensure the project is staffed with professional and experienced technicians who perform services with WPWMA's best interests in mind, WPWMA has implemented the following minimum personnel requirements.

- OM&M Providers shall provide routine and periodic training of field and office personnel from the Solid Waste Association of North America (SWANA) or similar trade group to ensure that services provided WPWMA are in accordance with the most recent state of the practice and consistent with industry standards and best practices.

2.3.1 Self-Performance of Work

The OM&M Provider must be able to self-perform all routine and non-routine services and have capability for performing monitoring, maintenance, troubleshooting, and repair work on all portions of the GCCS with the following exceptions:

A. Electrical and mechanical repair and troubleshooting of proprietary systems (such as control logic, Supervisory Control and Data Acquisition [SCADA] Systems)
B. Medium or high voltage electrical panel work
C. Flare source testing

2.3.2 Work by Trained and Certified Personnel

Any confined space, excavation, or pipe fusion work conducted in support of OM&M work shall be performed only by trained and certified individuals, and the OM&M Provider shall take full responsibility for the safety and quality of work by their employees, contractors, and subcontractors. Certifications for such training shall be posted on the inside wall of the onsite job office.

2.3.3 Skills and Knowledge

Technicians performing OM&M services at WPWMA facilities must have a working knowledge of:

A. Equipment
   1. Monitoring equipment (hardware, software, calibration procedures, etc.) used to perform the work.
   2. Prime mover equipment (blowers, flares, control systems, compressors, piping, valves, gas driers, gas coolers, flow measurement devices, etc.).
   3. LFG wellfield components (wellheads, vertical and horizontal wells, vents, geosynthetic liners and boots, electric and pneumatic pumps, drip legs, gravity traps, sumps, etc.).
   4. Personal computers, specifically, software to download data, upload data to WPWMA's web-based LFG data management, email, and spreadsheets.
   5. The WPWMA's GE iFix SCADA system software and related Historian Excel plug in.

B. Regulations and Permits
   1. New Source Performance Standards (NSPS) for Municipal Solid Waste (MSW) Landfills (40 CFR 60 Subpart WWW)
   2. Site-specific Title V operating permit and relevant state permits,
   3. Federal and state regulations applicable to landfills and OM&M services
   4. Site-specific consent orders, operation plans, guidance documents, etc., related to the GCCS, odor control, and perimeter probe and surface emission monitoring, including:
      i. GCCS Design Plan
      ii. SEM Plan

C. COORDINATION WITH LFGE PLANT OPERATOR

If the GCCS supplies gas to a LFGE plant or other beneficial use facility, WPWMA shall notify the plant operator of the schedule for obtaining liquid levels, performing system repairs and modifications and/or emergency repairs, so the plant can make adjustments to its operations during that time and reduce unnecessary downtime. The WPWMA, OM&M Provider, and LFGE Plant Operator shall conduct bi-weekly meetings to discuss operations, scheduled maintenance and areas of concern, etc. A group text message shall be established with the WPWMA, OM&M Provider and LFGE Plant Operator to ensure communication on shutdowns, wellfield activity and changes, unscheduled maintenance and/or repairs. During scheduled maintenance, construction or repairs, shut downs to the GCCS may be necessary. In the event of a shut down the following protocol will be followed:

1. The OM&M Provider shall send notification on the group text message to confirm LFGE Operator is prepared for the shut down of system. An estimated time of work completion will be given and verification of ready status will be given.
2. The OM&M Provider shall send group text message updates to work status during shut down and alert LFGE Operator to any delays.
3. The OM&M Provider shall send notification upon completion of work and GCCS start-up. Upon start-up of GCCS the OM&M Provider shall monitor the gas flow at the BFS to ensure the gas composition is within normal range for the safe start-up of the LFGE Plant.

2.4 GCCS EMERGENCIES

A GCCS emergency is defined as an urgent matter regarding the operation and maintenance of the GCCS (and not otherwise covered by other procedures, specifically the SSM or HASP) that is, or has the potential to be, a violation of the site's permit(s) or federal, state, or local regulations or could cause significant damage to the landfill or its infrastructure.

2.4.1 Notification to WPWMA Personnel

Communicate the GCCS emergency to the Landfill Operations Manager as soon as practical, but **no more than 1 hour after identifying the event.** The OM&M technician or project manager shall attempt to notify the Landfill Operations Manager by phone and then text; notification via e-mail alone shall only be acceptable if multiple attempts by phone or in person are unsuccessful in reaching the WPWMA personnel. In communicating the nature of emergencies to WPWMA, include the following information:

- A description of the GCCS emergency,
- Specific condition of the permit(s) or federal, state, or local regulation that may have been or could be exceeded if action is not taken immediately, and
- Specific location where the GCCS emergency occurred or is occurring.

If the GCCS emergency was conveyed verbally, follow up with an e-mail or other written documentation within one business day confirming the discussion.

The OM&M Provider shall not leave the site before either the Landfill Operations Manager is notified of the GCCS emergency and has agreed that the services of the OM&M Provider **are not** required to address the situation. If the Landfill Operations Manager is not available to address the GCCS emergency, the OM&M Provider shall use the call tree to contact another WPWMA representative regarding the situation.

2.4.2 Regulatory Notification

If necessary, the Landfill Operations Manager will notify the appropriate regulatory agency of the situation. The OM&M Provider **shall not** contact any federal, state, or local agencies on behalf of WPWMA unless specifically directed to do so by the Landfill Operations Manager.

2.4.3 Press/News Agencies

Only authorized WPWMA personnel are permitted to speak to the press, civic leaders, or other outside parties regarding WPWMA facilities or operations. The OM&M Provider shall not speak to these parties on behalf of WPWMA.

2.5 CONTACT CALL TREE FOR GCCS EMERGENCIES

Before starting field work, the OM&M project manager shall prepare a call tree that specifies, in order, who should be called in case of a GCCS emergency. At a minimum, the call tree shall include:

- OM&M lead technician and alternate technicians
- OM&M project manager

- Landfill Operations Manager – Person responsible for landfill operations - Other titles typically assigned to this individual include: General Manager, Site Manager, Operations Manager
- WPWMA LFG Operations Manager

Include the following information for each person:

- Office Phone
- Cell Phone
- Home Phone (optional)
- Email address
- Business Address

Provide a copy of the call tree to each person listed on the tree, including all OM&M personnel who perform work at the site. Place a copy of the call tree in a conspicuous location at the site's blower station control panel.

SECTION 3
GCCS OPERATING GOALS

3.1 DEFINITIONS

The following terms are used in this section and the remainder of this SOP.

- **Pressure vs. vacuum:** These terms are well known, but it is important to understand that vacuum is defined as negative pressure, and as such, there are two ways in which we can describe the pressure in a header or well. For example, we can say that a well has an initial static pressure of -3.5 inches of water column (in-w.c), or that it has a vacuum of +3.5 in-w.c. Similarly, we can say that the inlet of a blower skid has either -40 in-w.c. pressure or +40 in-w.c. vacuum.

  Note that in most cases, WPWMA will refer to "pressure" and not "vacuum" in order to be consistent with nomenclature and standards used in typical monitoring equipment. The exception to this is when referring to the negative pressure set point at the inlet of the blower system, which is almost universally referred to in the industry as the "vacuum set point". We recognize this inconsistency, but retain the use of that term since it is so commonly used in the LFG industry.

- **System pressure:** The static pressure measured in the header or lateral piping.

3.2 VACUUM SET POINT

WPWMA considers the vacuum set point an integral part of maintaining the overall "health" of the GCCS wellfield. Vacuum in the header should be held steady by using variable frequency drives (VFDs) on the blowers that are controlled by a pressure transmitter mounted upstream of the inlet of the blower station condensate knockout pot (KOP). Vacuum should be maintained as low as possible while ensuring minimum acceptable vacuum is available to the furthest points of the collection system. The site-specific vacuum set point is established and monitored at the inlet of the blower system (i.e., at the inlet of the KOP).

3.2.1 Goal of Vacuum Set Point

A vacuum "set point" shall be established by determining the highest pressure (i.e., smallest vacuum) at the blower skid inlet that allows the wells to remain within the operating range goals and to maximize LFG collection. The wellfield will be consistently balanced and tuned to this set point. The set point, once established, should not be changed unless wellfield conditions warrant an increase or decrease in pressure to accomplish balancing and tuning goals.
The goal of the vacuum set point is to:

- Provide sufficient vacuum to all portions of the LFG piping network
- Provide LFG extraction consistency.
- Facilitate consistent balancing and tuning of the wells.
- Minimize the potential to over pull the wells, which can lead to introducing ambient air into the waste mass.
- Prevent under pull, which can lead to reduced gas extraction and increased surface emissions, odors, and subsurface gas migration.
- Eliminate unnecessary use of electricity to generate unnecessary vacuum.

- Minimize impact if GCCS pipeline, fitting, or joint fails. Having minimal vacuum reduces the potential for large amounts of soil, trash, air and debris to enter the GCCS if a failure occurs.

A minimum system vacuum set point will be set based on the following:

- Input from the OM&M Provider.

- Other data, including engineering calculations and equipment performance limits and capacities.

- Analysis of the GCCS to ensure that the set point achieves sufficient negative pressure to keep the wellfield in compliance with:

    - Established operating parameters and thresholds
    - Perimeter gas probe limits
    - Programs to control fugitive gas emissions/odors
- As of July 2020, the inlet vacuum setting was 63.5" w.c.

3.2.2 Changing the Vacuum Set Point

Once established, the vacuum set point shall not be changed unless deemed necessary by WPWMA and OM&M Provider. If the set point is to be changed, the OM&M Provider shall notify WPWMA of the proposed change and why the change is necessary. The OM&M Provider shall not change the vacuum set point more than 10% (+ or -) without approval of the WPWMA.

3.3 NSPS/EG THRESHOLDS AND WPWMA SOP TARGETS

WPWMA is committed to providing consistent and reliable GCCS operation, and each GCCS must be operated with the goals listed in Section 1 in mind:

- Meet and/or exceed the requirements of the federal New Source Performance Standards (NSPS) and Emission Guidelines (EG).
- Operate within the limits and guidelines of WPWMA's SOP.
- Control fugitive odors and surface emissions.
- Control subsurface LFG migration.
- Avoid negative groundwater impacts from LFG.
- Operate the GCCS using best industry practices in a professional and safe manner.
- Operate the GCCS to maximize the flow and methane quality to the flare and on site LFGTE facility.

The following default operational targets have been established to ensure that WPWMA GCCS achieve the minimum criteria consistent with the NSPS or the California Landfill Methane Rule The OM&M Provider shall meet the more stringent of either the:

- NSPS/LMR, state, or local regulatory operating limits,
- WPWMA SOP target operational levels, or
- Site-specific operating limits.

The table below summarizes NSPS/EG regulatory thresholds and WPWMA SOP targets. State, local, or site-specific limits may be inserted as they are approved (site-specific limits must be approved per the procedures presented in Section 1).

Parameter at the Wellhead	NSPS/EG Threshold	SOP Target
Oxygen (% by volume)	<5	<2 maximum (<1 typical)
Pressure (in-w.c.)	<0	<0
Gas temperature (°F)	<131	<131 (1) (<120 typical)
Methane (% by volume)	N/A	(50 typical)
Balance gas (% by volume)	N/A	<20
Gas flow rate (scfm)	N/A	≥ 5
Minimum system pressure (in-w.c.)	N/A	≤ -10 (2)
Monitoring frequency	Monthly	Monthly (see Section 3.3)

(1) Unless reasonable higher operating values (HOVs) have been approved by the applicable regulatory agency or enhanced monitoring has been performed and appropriate measures are in place to accommodate elevated temperatures.
(2) Measured at the hydraulically most distant point of the GCCS (i.e., the point in the GCCS with the highest system pressure (lowest system vacuum)).

3.4 ESTABLISHING SITE-SPECIFIC OPERATING LIMITS

There are alternate operating limits that can be established for a GCCS:

1) **Variances to regulatory parameter thresholds.** Variances to NSPS/EG parameter thresholds are also known as "higher operating values" (HOVs). Regulatory HOVs cannot be exceeded, regardless of any site-specific SOP limits. If applicable, establishing a site-specific operating value shall be performed in conjunction with obtaining an approved variance from the applicable regulatory agency.
2) These must be proposed by WPWMA to the APCD with assistance from the air compliance consultant and with input from the OM&M Provider, as necessary.

3.4.1 Management of Regulatory HOVs

Higher operating values may be requested from the applicable regulatory agency as deemed appropriate by WPWMA's Landfill GCCS Design Plan provided in Appendix A.

WPWMA or the air compliance consultant shall track and document all alternate operating limits or HOVs approved by local, state, or federal regulatory agencies in accordance with the requirements of WPWMA's *Landfill GCCS Design Plan provided in Appendix A* At a minimum, the following information must be tabulated, kept up-to-date, and uploaded to WPWMA's LFG database for each approved HOV:

1. Well ID
2. Date of approval of alternate value
3. Duration of approval (if temporary)
4. Parameter for which the alternate operating limit was granted
5. New allowable operating threshold
6. Regulatory citation or copy of document granting approval

If applicable, the OM&M Provider shall input pertinent information into WPWMA's LFG database for the purpose of automatically identifying exceedances or compliance timelines.

3.4.2 Temporary Alternate Operating Limits

Temporary alternate operating limits may be applicable under certain circumstances, including the following:

- Subsurface oxidation (SSO) or landfill fire – An example of this would be when wells are turned off in an attempt to prevent pulling oxygen into the waste mass.

- Decommissioned well(s) – This includes wells taken off-line from the permitted GCCS with regulatory approval. In this case, the well is left in place and is available to be reconnected to the GCCS in the event surface emissions in the area are detected.

- Other conditions as defined by permit or consent order.

If temporary alternate operating limits are used, the OM&M Provider shall make note that such limits are being applied within the monthly GCCS operating report.

3.4.3 Permanent Alternate Operating Limits

Alternate values for pressure, temperature, or oxygen may be established by:

- Variance letter from the local permitting authority or U.S. EPA.

- Permit condition listing the approved alternate value.

- Rule citing other allowable limits.

- Site-specific conditions, provided that limits established by permit, rule, or consent order are not exceeded.

SECTION 4
WELLFIELD OPERATION, MONITORING, AND TUNING

4.1 OVERVIEW AND GENERAL PRINCIPLES

To assure proper GCCS operation, WPWMA has established the following:

- **Single source of vacuum for the wellfield.** Negative system pressure shall be supplied by a single blower station for the wellfield. This requires the site infrastructure to be designed and constructed to accommodate all of the LFG flow to a single point, regardless of the number of control devices or end uses of the LFG. The single blower station then pushes the gas at minimal positive pressure to the flares and/or a delivery point from which it then travels to a beneficial end use (i.e., LFGE) project.

- **Blowers run on inlet vacuum control.** The blower system has VFDs that adjust the blower speed based on the blower discharge pressure continuously monitored at the outlet to the LFGE and flares that control vacuum applied to the wellfield.

- **Comprehensive wellfield data collection and wellhead flow rates.** This site-specific scope of work lists a myriad of data that must be collected. All of this information is vital to properly assess, troubleshoot, and improve, if necessary, the GCCS. For this reason, it is imperative that valid wellhead monitoring data include accurate wellhead flow rates and technician comments entered into the monitoring instrument (If applicable).

- **All data is considered compliance data.** All data, whether taken by the OM&M Provider, other parties, or regulatory agencies shall be treated as "compliance data". All data must be uploaded to WPWMA's LFG database, and all of it is subject to regulatory thresholds and scrutiny. Under no circumstances shall the OM&M Provider obtain data and not provide it to WPWMA or fail to enter it into the site operating record via the LFG database.

- **All data must be uploaded to WPWMA's LFG database.** Without exception, all GCCS and gas migration monitoring (i.e., probes and structures) data must be uploaded to WPWMA's LFG database.

- **Competency of OM&M personnel.** WPWMA has minimum standards for technician experience and competency, as listed Section 2.4.

4.2 DATA TAGS

Various information tags are used in this SOP and are commonly used in the practice of performing OM&M at the site. Some of these are defined or described below.

- **Location –** This is the physical location where the reading is taken. In many cases, the "Location" and "Point Name" will be the same, unless there are multiple sampling points at a given location. For example, if GP-5 has a shallow and deep component, the "Location" is designated as GP-5, but the actual monitoring "Points" would be designated as GP-5S and GP-5D for the shallow and deep probes, respectively, located at GP-5.
- **Point Name –** The Point Name is the name by which the well, probe, or sampling location is known (e.g., EW-01, GP-08, inlet, outlet, etc.) The Point Name is not limited by the number of

characters. It should be descriptive enough so that users understand what it is, but should not be overly long, either.

- **Point ID** – This is the ID used by the LFG monitoring instrument (commonly known as the "GEM ID" when using a Landtec instrument). Point IDs must be unique for each site and for each monitored location.
- **Point Type** – Points are described as any of the following:

    - Well
    - Monitoring Probe
    - Sample Port
    - Flare-Engine-GHG
    - Calibration Record
    - Grid

Additional types may be added to the database in the future. Users are responsible for knowing the options available and ensuring that each Point ID is characterized properly with the correct "point type" designation.

4.3 IDENTIFICATION OF WELLS AND PROBES REQUIRING MONITORING

The WPWMA shall provide the OM&M Provider a copy of the most recent site plans and permit requirements and shall direct any questions on the required scope of work to WPWMA. At least annually, the WPWMA will communicate whether there are any changes in the wells to be monitored or if changes are expected based on planned GCCS expansions.

LFG Wells and Collectors

Regardless of NSPS/EG status, all wells/collectors are to be monitored at least once per month, unless otherwise noted by WPWMA. This includes vertical wells, horizontal collectors, shallow collectors, under-liner collectors (tie-ins to the leachate collection and removal system (LCRS), soil vapor extraction (SVE) wells, etc. In addition, the requirement to obtain flow rate measurements for each wellhead reading applies to all of these collectors as well.

Gas Migration Monitoring Probes and Structure Monitoring Locations

As with the GCCS components, the OM&M Provider shall verify the gas migration monitoring probe and structure locations are current to ensure the correct locations for probes and structure monitoring are covered. The site and OM&M Provider shall confirm that the OM&M Provider has a copy of the most recent site monitoring plan. If probes or structures have been added to the site's monitoring plan, WPWMA shall provide an updated list or map to the OM&M Provider.

4.4 MONITORING EQUIPMENT MINIMUM STANDARDS

The accuracy, completeness and dependability of the monitoring equipment used in the field is key to providing OM&M personnel with reliable results on which to base tuning decisions.

All GCCS field monitoring equipment must meet the following minimum requirements:

1. Infrared sensor technology for CH_4 and CO_2 measurement.
2. Electrochemical sensor for O_2 measurement.

3. Temperature probe to measure the temperature of the gas stream.
4. Internal pressure sensors to measure static, system, and differential pressures.
5. Ability to be calibrated in the field.
6. Ability to store measured data and user defined comments electronically.
7. Data shall be exported via a .csv file or encrypted file format supported by WPWMA's LFG database.

4.5 MONITORING POINT NAMING AND STANDARD COMMENTS

Each monitoring location must have a site-specific ID that is unique to the monitoring point. The IDs must be:

- Consistent with the site's GCCS Design Plan and Record Drawings
- Configured in the meter to accurately calculate flow rates from the well by recognizing the type and size of wellhead and the flow measuring device (pitot tube, orifice plate, venturi, etc.)

The OM&M Provider shall compile the Point IDs into a single ID set that shall be used for all work related to the site and upload it to WPWMA's LFG database. This will ensure that the most recent file is always available for alternate technicians and others who may perform monitoring at the site.

4.5.1 Calibration Reading IDs

All instrument calibrations shall be stored in the monitoring device and uploaded to WPWMA's LFG database. Calibration IDs shall consist of the 3 letter site code ("WES"), followed by "CG" to designate a calibration gas, followed by an indicator of the gas concentration. The "M" in the following examples indicates methane. The "O" indicates oxygen.

50% CH_4/35% CO_2/balance gas =	WESCGM50
15% CH_4/15% CO_2/remainder balance gas =	WESCGM15
4% O_2/remainder balance gas =	WESTCGO4
Atmospheric air =	WESCGAIR

4.5.2 Prime Mover Inlet and Outlet IDs

Establish IDs for the inlet and outlet of the prime movers (i.e., blower station) to differentiate readings taken at the beginning and end of each monitoring event.

4.5.3 Inlet and Outlet of Each Blower IDs

Establish IDs for the inlet and outlet of each individual blower. Each monitoring port shall be have a Point ID label affixed. These ports are used to measure pressure at the inlet and outlet of the blowers, without any losses that would be attributable to valves or fittings, and allow personnel to compare inlet and outlet pressure and flow rates to the blower curve for troubleshooting purposes or to confirm proper performance. For the Prime Movers, establish IDs to differentiate readings taken at the beginning and end of each monitoring event and record them. For all other blowers, it is not necessary to obtain readings at these monitoring locations during each monitoring event, however, these should be monitored periodically (i.e., at least semiannually) to compare blower performance to the blower curve.

4.5.4 Flame Arrestor Inlet and Outlet IDs

Flame arrestor ports provide the following important information:

1. Gas quality to the control device (for GHG monitoring purposes).

2. Flame arrestor inlet pressure (indicates whether excess pressure is present on the discharge side of the blowers, which impacts the amount of negative pressure that can be applied to the wellfield).

3. Flame arrestor outlet pressure (identifies whether there is excess pressure to the flare, which for an enclosed flare indicates clogging of the burner tips, or for an open flare may indicate that an orifice plate installed at the flare tip is too small).

4. Differential pressure across the flame arrestor indicates whether the flame arrestor element is in need of cleaning or other maintenance.

4.5.5 Greenhouse Gas Monitoring IDs

A separate Point ID is required for each LFG control device, including:

- Each flare
- LFG energy projects or other end users

If a control device is decommissioned and no longer in use, the OM&M Provider is responsible for changing the status of the applicable ID in the LFG database so that it is designated as inactive or decommissioned. Readings are not required for control devices that have been decommissioned and identified as such in the database.

4.5.6 Replacement/Redrilled Wells

If a well/collector is replaced (redrilled/reconstructed), a new collector name and Point ID must be established in accordance with the naming convention used on the Construction Drawings.

> *…Redrills shall have the same number as the well that it replaces, followed by a letter that indicates the number of times the well has been replaced. For example, if EW-16 is being abandoned and replaced with a new well, the replacement well shall be named EW-16A. If EW-16A is later abandoned and replaced with a new well, the new well shall be named EW-16B, and so on.*

The OM&M Provider shall designate the ID for the old well as "Abandoned" in WPWMA's LFG database, and the ID shall not be re-used in the future.

4.5.7 Allowable Comments

The OM&M Provider shall create a standard list of operational comments to utilize in the meter when monitoring and making adjustments. Comment Lists shall be unique for each point type. The utilized comments list will be the same on all site meters and OM&M technicians shall be trained to apply comments consistently. The following list presents suggested comments. Actual comments used can differ; however, a comment must be created and saved that clearly reflects the adjustment made:

a.) No Change
b.) Opened Valve ½ turn or less
c.) Opened Valve ½ to 1 turn
d.) Opened Valve > 1 turn
e.) Valve already open 100%
f.) Closed Valve ½ turn or less
g.) Closed Valve ½ to 1 turn
h.) Closed Valve > 1 turn
i.) Valve already closed 100%
j.) Barely Open
k.) Second reading
l.) Vadose Well NSPS Exempt
m.) Decom SSO Concern (temporary)
n.) Offline this Date
o.) Reconnected this Date
p.) Abandoned this Date (wellhead removed)
q.) GHG Point not in use
r.) Can Not Sample due to Access/Safety
s.) Remote Wellhead
t.) CO Tube Sample Completed
u.) H2S Tube Sample Completed
v.) Opened for Sample/Then Closed
w.) Prime Mover Set Point Changed

The OM&M Provider shall also create a standard list of operational comments to utilize in the meter if an operational issue is observed. Examples are as follows:

i) Surging in header (watered out)
ii) Surging in well (watered in)
iii) Bad sample ports
iv) Orifice Plate Changed
v) Valve needs replacement
vi) Flex hose needs extension
vii) Flex hose needs replacement
viii) Header vacuum loss
ix) Repair well bore seal
x) Well needs to be extended/lowered
xi) User defined – See field notes.

4.6 VACUUM SET POINT AND BLOWER/FLARE STATION OPERATION

The blower/flare station must be operated and maintained to provide a consistent negative pressure on the wellfield at the established set point. The OM&M Provider shall make necessary adjustments to the wellfield and the blower/flare station to maintain the set point during and after wellfield monitoring and tuning.

In the unique case where an outside party such as a LFGE plant is responsible for the prime mover operation (such as a temporary bypass condition if WPWMA's blower skid is offline), WPWMA or the OM&M Provider shall notify the party responsible for the prime mover of the following:

- Set point to be maintained
- The schedule for when monitoring will be performed.

The following actions shall be taken for situations in which consistent negative pressure is not being applied by the prime movers:

Prime Mover Shutdown

- If the prime mover(s) is/are down for 1 hour or more, WPWMA shall be notified immediately.

- Start back-up device (if present) and adjust the device to reach the vacuum to set point. Continue to monitor the wellfield once vacuum has stabilized from the back-up device.

- When prime mover shutdowns are the result of LFGE plant maintenance, it is imperative that monitoring schedules are communicated with the OM&M Provider to prevent future episodes.

Malfunction

- Postpone monitoring and adjustments until the malfunction is resolved, unless postponement will result in non-compliance of permit terms or regulatory requirements to obtain readings within a certain timeframe.

- Follow the SSM Plan.

- Perform postponed monitoring and adjustment as soon as practical after the resolution of the malfunction, but in no circumstance shall the postponement result in an exceedance of the applicable monitoring or adjustment standard timeline.

Design or Equipment Limitation

- WPWMA may initiate an investigation into system design or equipment limitations that may be preventing the application of a consistent negative pressure. The investigation must include at a minimum:

    - Analysis of cause of inconsistent negative pressure,
    - Evaluation of existing equipment,
    - Pricing to repair existing equipment or purchase of new equipment, and
    - Feasibility of achieving consistent negative pressure in a cost effective manner using best industry practices.

- If design or equipment modifications are not possible, the operator of the prime mover shall make periodic adjustments of the vacuum to maintain the set point. Adjustments should be made as necessary and at least weekly.

4.7 WELLFIELD COMPONENT INTEGRITY CHECKS

The purpose of the wellfield component integrity check is to identify any condition that renders or could render the GCCS inoperable or impair performance. This information will be used by WPWMA

to approve system improvements and schedule repairs. OM&M Provider shall submit this information to the WPWMA with the monthly report and bring any urgent issues to the attention of WPWMA and Landfill Operations Manager immediately.

4.7.1 Survey Stakes or Poles

During GCCS construction events, the contractor may use stakes or pipes to mark underground pipes to be surveyed. These are supposed to be removed before the contractor demobilizes from the site. Because the stakes can leave holes from which surface emissions may occur and because survey pipes can be conduits for direct emissions of LFG to the atmosphere, the OM&M Provider shall inform WPWMA if any stakes or pipe markers are left in place by the construction contractor so that WPWMA can coordinate their removal.

4.7.2 LFG Well and Collector Integrity

Before leaving each well, the technician shall check the well casing, wellhead, and lateral to ensure all components are tight, not leaking, and functioning properly. Issues observed during monthly inspections shall be documented and included in the monthly report or communicated to WPWMA by another means if otherwise requested. Repairs shall be made as expeditiously as possible, and in some cases, as listed below, shall be performed during the routine monitoring event. Items to inspect are listed below:

- Flex Hose: Ensure all flexible hoses are of adequate length, are not bound, kinked or constricted in any way and are providing proper drainage of condensate. Weathering of the hose shall be noted (breaks, cracks, brittle condition, etc.) and the hose shall be replaced if necessary.

- Wellhead Valve: Ensure all wellhead valves are properly functioning. This can only be performed by occasionally exercising the valve along its entire operating range to ensure proper function. Replace broken valve components as needed.

- Sample and Temperature Ports:
    - Check all sample and temperature ports on the well and wellhead to ensure they are installed tightly, functioning properly, and are not leaking. Replace leaking ports.
    - Ensure ports are free of debris, and clean as necessary.
    - Inspect sample port caps for damage or deterioration and replace if necessary.
    - Damaged or leaking sampling ports or missing port caps shall be replaced during routine monitoring.
    - Thermometers that are permanently installed shall be inspected for proper operation. Check thermometers that are installed with quick-connect fittings quarterly and those without quick-connect fittings annually, at a minimum.
        - Compare measurements to known standards to determine accuracy.
        - Rotate to ensure proper dial operation.
        - Inspect O-rings or seals for damage or wear.
        - Replace thermometer if necessary.

- Flow Measurement Components:
    - Flow measurement is mandatory for wellheads with flow capability, and the OM&M Provider shall take steps to ensure accurate readings are obtained.
    - Ensure that flow measurement components (pitot tubes, orifice plates, etc.) are properly installed and that the monitoring device is set up properly to record flow rates.

  - If orifice plates are used, the OM&M Provider shall ensure the orifice plate is properly sized so that excessive pressure loss is not occurring across the plate, that the differential pressure is in the desired range specified by the wellhead manufacturer (generally between 6 and 0.5 inches of water column vacuum) to ensure accurate readings, and that the orifice plate size is correctly entered into the monitoring instrument and Site Build table in the WPWMA LFG database.

- Mechanical Joints:
  - Ensure all mechanical joints (Fernco [rubberized flexible] couplers, PVC unions, electrofusion couplings, etc.) are tight, functioning properly, and are not leaking.
  - Ensure all clamps and mechanical fasteners are tight and operating properly.
  - Document indications of vacuum leaks and immediately repair. Potential leaks include but are not limited to:
    - Hissing sound coming from a joint.
    - Staining or accumulation of liquid on a well casing or wellhead.

- Well Casing: Check well casing integrity and general ground conditions surrounding the extraction well. Voids and settlement near any well shall be noted and communicated to WPWMA and Landfill Operations Manager.

- Well ID Label: If the well is not labeled, the OM&M Provider shall install appropriate sized labels with the ID number.

- Dewatering Pumps: Note any kinked liquid discharge hoses, leaking liquid discharge hoses and fittings, leaking air supply components (regulators, fittings, valves), etc. The OM&M Provider shall bring these items to the attention of WPWMA or Landfill Operations Manager and make arrangements to fix them.

4.7.3 Valves and Condensate Management System Integrity

The OM&M Provider shall also inspect all condensate sumps/traps and isolation valves (header, air supply, and condensate/dewatering system force mains) to ensure the following:

- Vacuum is present in the sump or trap at expected and appropriate values.
- All sump components (gaskets, lids, bolts, etc.) are tight and not leaking.
- The pump is functioning and air is available to the pump. All pneumatic pumps shall have cycle counters to help ensure that the pump is cycling at the expected rate between inspections. If the pump is electric, check the control panel and totalizer (if present) to ensure the pump is properly functioning and pumping at the expected rate between inspections.
- All valves are operational. This can only be accomplished by regular exercise of the valve.
- No PVC or CPVC fittings or valves may be used on any air supply lines per OSHA. The OM&M Provider shall bring to the attention of WPWMA if PVC or CPVC components are installed on compressed air systems and coordinate replacing those components as soon as possible.

4.8 WELLFIELD MONITORING

Without complete and accurate data, improper tuning adjustments can occur, which can lead to compliance, odor, and/or migration issues, and potentially cause long-term damage to the gas

producing bacteria population in the landfill. **A complete and accurate data set for each monitoring event is required by WPWMA.** Data will be used to document compliance, track wellfield trends, and assist with budgeting wellfield expenditures, etc. Incomplete data sets, corrupted data, missing data, chevrons (placeholder data/blanks), etc., are unacceptable.

This section defines standards intended to help ensure valid data is obtained by the OM&M Provider.

4.8.1 Monitoring Schedule and Tuning Frequency

The ultimate goals of balancing and tuning a wellfield are to:

- Maintain the wellfield in accordance with federal, state and local regulations
- Maintain compliance with site permits
- Control odors
- Control subsurface migration and fugitive surface emissions of LFG

The following balancing and tuning protocols have been developed to achieve these goals and include flexibility to address site-specific situations.

Wellhead tuning shall typically occur at the same time the wells are monitored. Balancing and tuning events will be performed in one day or, if additional time is required, on consecutive days. The negative pressure at the blower/flare station must remain consistent for the entire monitoring event. Follow-up monitoring between events will be performed as needed.

4.8.1.1 NSPS/EG Regulated Sites

IMPORTANT: *The NSPS/EG regulations do not include exceptions to the monthly monitoring or recheck requirements. It is the responsibility of the OM&M Provider to work with WPWMA to ensure all parties understand the monitoring requirements and to properly document if any approved regulatory variances are applicable.*

At a minimum, the entire GCCS shall be monitored and tuned **one time per month**. If local, state or federal regulations dictate a different frequency, monitoring and tuning shall be performed according to the more stringent frequency.

Scheduling (NSPS/LMR Site)

The initial monitoring and tuning event should be completed by the 15th of the month, unless site conditions dictate otherwise. This guideline is intended to allow regulatory follow up monitoring, if required, within the month to meet the 30-day timeline.

A. Perform NSPS/LMR 5-day corrective actions on the same day that the parameter exceeded the limit, if possible.

B. Perform additional monitoring to troubleshoot compliance or operations issues as needed, with prior approval of WPWMA.

C. WPWMA may place the site on a twice per month monitoring frequency if it is determined that there are odor concerns, there is evidence of subsurface gas migration (or concerns about subsurface migration), if there are excessive surface emissions, or for other reasons. Failure to meet site permit conditions may also warrant this level of increased monitoring

frequency. Twice per month monitoring shall continue until the more frequent monitoring is no longer necessary or appropriate.

D. If the site is required to perform twice per month monitoring, the second monitoring and tuning event must be completed within 15 days of the start of the initial monitoring event and before the end of the month. The OM&M Provider shall schedule any 15-day remonitoring from the initial event in order to coincide with the second wellfield monitoring event. That is, the OM&M Provider shall avoid making special trips to the site for remonitoring events as much as possible.

4.8.2 Conditions Required for Wellfield Monitoring

Monitoring shall only be performed if the system pressure is stable and operations are representative of typical operating conditions. The exception to this shall be if regulatory deadlines are impending. (*Recall that earlier in this document it was explained that the NSPS/EG does not include provisions for not obtaining readings within the regulatory timeframes even if upset conditions exist.*) In that case, monitoring may proceed even if an uncharacteristically high number of exceedances might result (such as if the blower station is offline for multiple days and cannot be repaired in time to bring the system on line before the regulatory deadline for monitoring).

4.8.3 Field Monitoring Equipment Calibrations

Properly functioning equipment is vital for GCCS monitoring and ensuring data collected is accurate and reliable. This begins with using equipment that is properly calibrated and is functioning as designed by the manufacturer. The following section assumes that the monitoring unit has been factory calibrated and checked for proper performance at an interval recommended by the manufacturer, both of which are required by WPWMA.

Upon verification that the monitoring unit is properly maintained and functioning properly, use the following procedure for field calibration:

A. Utilize the appropriate site Calibration Reading IDs to store all calibration data in the monitoring instrument so that it may be uploaded to WPWMA's LFG database with the other monitoring data that will be collected. Include the calibration gas cylinder Lot # in the comments field for documentation and quality control (QC) purposes.

B. Inspect in-line filters for moisture and fine particles, and replace if necessary.

C. Inspect the integrity of the sample train and replace parts as necessary.
   1. Test the sample train for leaks. Tubing should seal tight onto the hose barbs.
   2. Note the condition of the tubing.
   3. Note the condition of sample fitting O-ring(s).
   4. Inspect the carbon filter for signs of breakthrough, and replace at least monthly.
   5. Inspect the water trap for signs of blockage and replace at least monthly

D. Perform field calibrations per the manufacturer's specifications. Including letting unit initialize and equilibrate to sampling conditions prior to calibration. At a minimum equipment calibration needs to be performed prior to each day of monitoring activities.

4.8.4 Blower/Flare Station Monitoring

The blower/flare station shall be monitored at the beginning and end of each day during which the wellfield is monitored. Data required to be collected includes the inlet gas concentrations, system pressure, flow rate, and blower system discharge pressure. Section 7 includes a comprehensive description of additional monitoring and maintenance activities that are required for the blower/flare station.

4.8.5 Wellhead Monitoring

The following requirements apply for wellhead monitoring:

1. If the initial reading at a well is not within NSPS/EG limits or the SOP targets, the technician must adjust the well and record a second complete reading. Utilizing the "adjusted flow", "adjusted pressure", and "adjusted temperature" in lieu of a complete second reading is not allowed because adjusted gas composition is not stored. If field instrument manufacturers modify their equipment in the future to record adjusted gas composition, WPWMA may reconsider not requiring a second complete reading.

2. The OM&M provider must make every attempt to avoid causing an NSPS/EG exceedance due to a well adjustment.

3. A "complete reading" is defined as an entire new set of measurements of methane, carbon dioxide, oxygen, balance gas, temperature, pressures, flow rate, etc. This includes the "Adjusted Values" that may be collected by a meter.

4. If any part of a complete reading (initial values or adjusted values) is not within the NSPS/EG limits, then the reading is considered an exceedance and corrective actions and rechecks must be performed.

5. A 15-day recheck is not required if the second complete reading that was taken to document the 5-day corrective action shows the well is back within NSPS/EG operating thresholds.

4.8.6 Initial Wellhead Measurements

The procedures listed in this section assume that the wellfield is already operating.

1. Make no wellhead adjustments while taking the initial readings. Adjustments should only be made while viewing the side-by-side (initial pressure vs. adjusted pressure) screen.
2. **ID Selection:** Select the appropriate well ID in the meter.
3. **Purge:** With the sample train and pressure sensor hoses disconnected, activate the meter's internal sample pump so that the entire sample train is purged and the results are indicative of ambient air (approximately 20-21% O_2 and 79-80% balance gas).
4. **Zero Pressure Transducers:** Perform transducer zero function to ambient air conditions. Be sure to minimize wind effects during the procedure by shielding the hose ends. Do not block hose ends while zeroing pressure transducers.
5. **Monitoring Port Integrity:** Check wellhead sample ports and fittings for cracks, bad o-rings and blockage by liquid, ice, spider webs, or other substances.
6. **Sampling:**
    a.) Connect all applicable sample train hoses. Verify that all connections are snug and air tight and that hoses are not pinched or kinked.

b.) **Temperature:** Record temperature using the permanently installed thermometer, if installed, or by inserting a temperature probe or dial thermometer into wellhead temperature sample port. Verify and store temperature reading (measured in degrees Fahrenheit).

c.) **Static Pressure:**
   i. Ensure the wellhead static pressure has stabilized before storing readings.
   ii. If pressure readings indicate surging, store the comment "surging" in the instrument.

d.) **Differential pressure:**
   i. The OM&M Provider shall ensure differential pressures are maintained within the range specified for each wellhead type to ensure accurate flow readings:
      a. Orifice Plate (0.5 – 5.0 inches of water column vacuum) – *Currently the WPWMA exclusively uses this type*. The OM&M Provider shall increase/decrease the orifice plate size to bring the differential pressure within the acceptable range.
      b. Pitot Tube (0.025 – 4.0) or Venturi (0.1 – 5.0) - OM&M Provider shall change the wellhead to the size required to maintain differential pressure is in the desired range.
   ii. Negative differential pressures – not acceptable. Negative differential pressures may indicate the following:
      a. An error in measurement.
      b. Well ID is not set-up properly in the meter.
      c. Surging

e.) **System Pressure:**
   i. Record the system pressure (i.e., header vacuum) from the port installed on the lateral side of the wellhead valve.

f.) **Flow Rate:** Flow rate measurements are required for each wellhead reading.
   i. Verify that the flow rate is properly displayed and appear accurate.
   ii. Verify that the differential pressure is within the range specified by the particular wellhead manufacturer to ensure accurate readings.
   iii. Provide results to WPWMA in the monthly report and identify if wellhead flow measuring device needs to be replaced or upgraded to the correct size to facilitate future flow rate measurements.

g.) Confirm the Point ID is properly set up in the meter and the correct ID has been selected. If not, restart the monitoring process.

h.) Select correct comment if an adjustment was made.
   i. Ensure each adjusted reading has a stored comment.
   ii. Choose a comment from the list in Section 5.5.9.

7. Store the reading.
8. **Exceedances:** If a wellhead adjustment was made, the technician shall take a second complete reading.
   a.) If the reading indicates an exceedance of NSPS/EG or other permit requirements, make an adjustment following the adjustment guidelines listed below and adhere to the monitoring procedures listed in the following sections for documenting 5-day corrective action implementation and 15-day recheck events.

4.8.7 Adjusted Wellhead Measurements

If a wellhead adjustment is required, a complete second reading is required by WPWMA.

A. Follow the monitoring procedures defined above for the initial reading.

B. Limit vacuum or flow change to 10% increase or decrease from the initial reading, except in the following situations. If these situations arise, a more aggressive adjustment can be made, but must be justified in the monthly report.
    1. Elevated levels of oxygen greater than or equal to 5% by volume,
    2. Wellhead temperatures greater than or equal to 131 degrees Fahrenheit,
    3. The well is in the vicinity of an SSO or suspected SSO.
    4. Other conditions discussed with WPWMA that warrant more aggressive tuning adjustments.

C. Once the adjustment has stabilized, store the reading with comments as described in Section 5.5.9.

4.8.8 Corrective Action Documentation and Rechecks

The NSPS requires two initial actions if an exceedance of the pressure, temperature, or oxygen (PTO) thresholds are detected:

- Within 5-days, implement corrective action to remediate the exceedance.
- Within 15-days, re-monitor the well to show that the exceedance has been remediated.

Additional steps may also be required by state or local regulatory agencies and other steps follow if the exceedance cannot be remediated within 15 days.

The OM&M Provider shall initiate/perform the corrective action (e.g., perform wellhead adjustments, address vacuum losses in a lateral pipe, etc.) on the same day as the initial monitoring. If this is not possible, the OM&M Provider shall implement the appropriate corrective within 5 days of the initial exceedance and re-monitor the well within 15 days of the initial exceedance.

4.8.8.1 NSPS/EG 5-Day Corrective Action Implementation

A. If wellhead adjustments, alone, are able to correct the exceedance, then the OM&M Provider shall make the wellhead adjustments on the date of the initial exceedance reading or within 5 days of that initial reading. This “second reading” shall be complete with gas quality, temperature, pressures, flow rate, and a comment entered into the “Comment” field in the instrument documenting the corrective action taken.

B. Comments entered into the monitoring instrument to document corrective actions must be consistent with the data collected.

C. Make adjustments during the recheck in accordance with procedures listed earlier in this section, as applicable.

    1. Make no wellhead adjustments while taking the initial readings. Adjustments should only be made in the side-by-side (initial pressure vs. adjusted pressure) screen.

2. Allow sufficient time after making an adjustment for the well/collector to stabilize prior to taking and storing data.

3. Stabilization times will vary but **cannot** be allowed to extend beyond applicable regulatory timelines.

4. It is not permissible to sacrifice one compliance parameter for another.

5. Measure the same parameters as those that were recorded for the initial reading.

D. Document corrective action or well adjustment.

4.8.8.2 NSPS/EG 15-Day Recheck

If the recheck and correction of the exceedance cannot be performed on the day of initial monitoring or within the 5-day corrective action implementation timeline, the recheck must be performed within 15 days of the initial exceedance.

The OM&M Provider shall document any additional corrective actions performed and provide this information to WPWMA and air compliance consultant in the monthly report for recordkeeping and reporting purposes.

4.8.9 120-Day Exceedance Clock

If a wellhead exceedance cannot be corrected within 15 days, per the NSPS/EG, the well must be replaced or additional corrective actions must be taken within 120 days. The well still must be monitored during this 120-day period, regardless of whether the exceedance exists. The NSPS/EG does not provide a mechanism that allows this monitoring to be skipped although the WPWMA has an approved Alternative Compliance Option that may extend this deadline on a case-by-case basis with APCD approval. Because it is a significant compliance issue, failure by the OM&M Provider to read a well during this 120-day period may be cause to terminate the OM&M contract.

4.8.10 Additional Monitoring Required

Various data must also be collected monthly from condensate sumps, condensate/liquids management drain lines and force mains, and leachate dewatering pumps as listed below.

4.8.10.1 Header Monitoring Points

- Collect pressure, flow and gas composition readings from main header pipeline sample ports. If ports are not currently installed at these locations, the OM&M Provider shall install ports of the same type as those used on the wellheads.

4.8.10.2 Condensate Sumps

- Collect system pressure at each condensate sump riser. If a port is not installed on the riser, the OM&M Provider shall install a port as part of its routine monitoring services. If monitoring ports are installed on the inlet and outlet piping of a sump, vacuum readings shall be taken at those ports, instead. If system pressure is not in line with expected values, the technician shall troubleshoot the cause. The OM&M Provider shall notify WPWMA of any system pressure issues within 2 hours of detection.

- Collect liquid levels from permanently mounted devices.

- Collect pump cycle count or totalizer reading and condition of air filter, regulator, and other above grade components of pumps, including any leaks or items requiring repair or replacement.

- Collect readings from any condensate sump flow meters.

4.8.10.3 Gas Well Dewatering Pumps

- Cycle count (totalizer reading from the cycle counter) for each installed pump.

- Condition of air filter, regulator, and other above grade components of pump, including any leaks or items requiring repair or replacement.

- Collect liquid levels monthly to ensure proper operation

4.8.10.4 GCCS-Related Force Mains and Gravity Drain Lines

- Force main pressure as measured by any gauges installed on lines.
- Gallon Meter readings for condensate force mains shall be collected weekly

SECTION 5
GREENHOUSE GAS MONITORING

The OM&M Provider shall take monthly greenhouse gas (GHG) readings as part of the routine work. Monitoring shall be performed in accordance with the monitoring requirements of the federal GHG Mandatory Reporting Rule (MRR) and any applicable state or local requirements. At present, the MRR requires monthly readings of methane concentration. In addition to the gas concentrations, the OM&M Provider also shall record the flow rate to each control device and the gas temperature and pressure for each reading. This is consistent with the requirements for general blower/flare station and control device monitoring. Specific requirements include:

1. The OM&M Provider shall be familiar with and abide by the monitoring requirements for greenhouse gas.

2. A schematic showing the monitoring points and IDs shall clearly show the general location of the monitoring points relative to blower equipment, valves, control devices (flares, leachate evaporators, continuous LFG pilots on flares, LFGE end users), and piping appurtenances such as tees to the various control devices.

3. Obtain gas quality readings using a certified calibrated instrument in accordance with the regulations.

4. Reading frequency and timeframe between subsequent readings must be in accordance with applicable rules. The OM&M Provider shall be aware of the requirement regarding number of days between readings.

    a. If readings are taken monthly, per WPWMA's standard policy, there must be at least 14 days between readings.

5. GHG readings must be obtained when the GCCS is operating. Individual control devices may be off as a course of normal operation, but the overall flow rate from the blower skid should be representative of typical extraction rates.

6. Use the site-specific GHG monitoring IDs for each control device.

7. Obtain GHG readings for all operating control devices at the same general time on a single day, and under the same operating condition. These readings should provide a "snapshot" of the operating condition at a given point in time. If a control device is offline, Contractor shall do one of the following:

    a. Create a manual entry in the LFG database for the control device that is offline using the appropriate GHG ID, and indicate in the Comments field that the unit was not in use (NIU).

8. If a control device is decommissioned and no longer in use, the OM&M Provider is responsible for changing the status of the applicable ID in the LFG database so that it is designated as abandoned or decommissioned. Readings are not required for control devices that have been decommissioned and identified as such in the database.

9. All GHG readings must include a flow rate recorded (or manually entered) as the initial flow rate, at a minimum. An adjusted flow rate may also be recorded, but at a minimum the initial

flow rate field shall be populated. This flow data is used by WPWMA for periodic data evaluation, so it is imperative that the flow rate be recorded in the initial flow rate field. The OM&M Provider shall either type into the monitoring device the flow rate reading obtained from the flow meter or manually enter it in the database.

a. Upload data to WPWMA's LFG database within 24 hours of taking the reading, and review and approve the data (or take other appropriate actions related to the data) within 48 hours of upload.

10. Flow meters shall be calibrated annually unless the flow meter manufacturer requires more/less frequent calibrations.

SECTION 6
BLOWER/FLARE STATIONS

6.1 OPERATING PHILOSOPHY

As referenced at the beginning of Section 5, WPWMA has established a standard operating philosophy for extracting LFG from its landfill.

First and foremost, there should be a single source of vacuum for the wellfield, which is the blower system owned and operated by WPWMA. WPWMA's blower system is to be the sole mechanism by which LFG is removed from the landfill and conveyed to WPWMA's flares, leachate evaporators, or other end users of the gas (e.g., LFGE facilities, etc.). The only exception to this is during a temporary outage of WPWMA's blower system, during which a LFGE plant may be allowed to exert vacuum on the wellfield until WPWMA's system is brought back on line. Other general standards are as follows:

- Header design – With a single source of vacuum, the site infrastructure must be designed and constructed to accommodate all of the LFG flow to a single point, regardless of the number of control devices or end uses of the LFG.

- Distribution of collected gas – The single blower station pushes LFG at a user-defined positive pressure to the flares and/or a delivery point from which it then travels to a beneficial end use (e.g., LFGE) project. As of July 2020 this setpoint was 16.0" w.c.

- Dual Zone Flare - The Dual Zone flare shall operate at all times at a minimum of 100 scfm. Zone A shall operate at flows ranging from 100 to 450 scfm. Zone B shall operate at a minimum flow of 450 scfm and maximum 2500 scfm. Setpoints are established to enable automatic switching between zones based on flow. The system was designed to operate automatically in conjunction with the LFGE plant engines, as well as in lieu of plant operation.

- VFDs and inlet vacuum control – Providing a consistent vacuum to the wellfield, irrespective of flow rate and end use of the gas has shown to be the most effective way to ensure stable wellfield operations, maximize LFG recovery, and minimize compliance, odor, and offsite migration issues. To this end, the WPWMA uses a dual zone flare with redundant blowers that maintains blower speed and gas throughput by controlling the blowers off discharge pressure to the LFGE facility and modulates flare flow to maintain wellfield vacuum at the flare station. The only time that inlet vacuum control is not maintained stabile by the WPWMA blower/flare station is if LFGE facility is the only control device online. Once the flare is put back into service, the blower controls must return to establish vacuum control and LFG flow. The OM&M provider shall work with WPWMA to minimize the time of the shutdown and bring the flare back on line so that full control can resume as soon as practical.

  Blower redundancy – Blower systems are to always have full redundant capacity so that if a blower is offline for maintenance or because of failure, the other blower(s) can handle the full amount of LFG that can be collected. Blowers are to be rotated in and out of service monthly at maximum so that each unit has an approximately equal number of runtime.

6.2 MONITORING MINIMUM REQUIREMENTS

The OM&M Provider shall monitor the blower/flare station at the beginning and end of each wellfield monitoring event and on other occasions as may be necessary to confirm or ensure proper system operation. In general, this shall include but may not be limited to monitoring and/or checking the following. All pressure and gas concentration readings must be taken using unique monitoring point IDs and the data must be uploaded to WPWMA's LFG database for recordkeeping and troubleshooting purposes. Other data (such as blower amps, blower hours, liquids present in the KOP, etc.) should be logged electronically in an Excel spreadsheet or other means approved by WPWMA, and WPWMA may require it to be uploaded to its LFG database.

- Remote Monitoring, Control and Alarm Systems:
  - Check that the SCADA system, including monitoring and control, and alarm system autodialer are working properly and continuously.
  - Periodically (but at least monthly) review data recorded online by the data acquisition system to ensure that data is being properly recorded, and report any problems to WPWMA.
  - Check that the system is properly recording flow rate to each flare or other control device, control device combustion temperature, and inlet vacuum to the KOP, at a minimum.
  - If the system provides email, text, and/or telephone notifications for alarm conditions, confirm the notification list programmed into the system is up to date.
    - Confirm that email addresses and phone numbers are correct.
    - Remove any of the OM&M Provider's employees who are no longer employed by the OM&M Provider or who no longer perform work at the site.
    - Review the list of individuals receiving notifications and who have access to the web-based system with WPWMA to ensure that only authorized individuals have access. The OM&M Provider shall be responsible for removing access for individuals no longer requiring access.
  - Make adjustments, as necessary, and notify WPWMA or Landfill Operations Manager if the SCADA is not functioning properly.
- Automatic Mode: Ensure the blowers and flare are operating in "Auto" mode.
  - Never allow the system to operate in "Hand" or "Manual" mode, except during short-duration testing. Operation in anything other than Auto mode is against WPWMA policy. Failure to comply with this may be cause to immediately terminate the OM&M Provider's contract.
  - If automatic mode is not working, immediately troubleshoot the system with the assistance of the flare manufacturer.
  - Electrical jumpers shall not be used to bypass Auto mode or any of the system safeties. The OM&M Provider shall immediately notify WPWMA if jumpers are found in the control panel. The flare manufacturer shall be contacted and their service technician or controls engineer shall remove any jumpers, correct the wiring, and ensure proper system operation. If it is determined that the OM&M Provider is responsible for the jumpers or modifications to wiring, the OM&M Provider shall reimburse all costs related to flare manufacturer's service call(s) and engineering support.
- Blower Station/Prime Mover Inlet:
  - Measure the gas composition and negative pressure at the inlet of the blower station/prime mover. The flow rate corresponding to this location shall also be stored with the reading. This flow rate may be read from the blower station control panel.
    - The location of the measurement shall be representative of the negative pressure applied to the main GCCS header.

- BFS Condensate Sump Maintenance
  - The pump at the condensate sump located at the BFS may need to be inspected and/or repaired while the GCCS is operational the following steps shall be taken prior to removing the pump for safety and to reduce risk of air intrusion into GCCS:
    1. The LFGE Plant Operator shall be notified of inspection being performed.The isolation valve on the west side of the condensate vault shall be closed.
    2. The pressurized air, equalization and condensate discharge line valves shall be closed.
    3. Safely remove pump for inspection.
    4. Reinstall pump and open valves.
- Condensate Knockout Pot (KOP):
  - Differential pressure across the KOP demister pad.
    - If pressure gauges are present, check the zero of each gauge to ensure the measured pressure is correct before recording a reading.
    - If differential pressure exceeds 3 inches of water column (in-w.c.), the OM&M Provider shall clean the demister pad. In general, the demister pad should be inspected and cleaned as needed.
  - Liquid level in the KOP.
    - Open the inlet and outlet valves of the liquid level sight glass in order to identify if liquid is present in the KOP.

- Blower Inlet/Outlet Pressure:
  - Record inlet and outlet pressure of each operating blower.
    - Note that these are the pressures <u>immediately at the inlet and outlet of the blower, before any valves, fittings, etc</u>. These are the true operating pressures of the blower and are needed in order to confirm the blower is achieving the flow and pressure shown on the blower curve. If pressure readings are instead taken at, say, the inlet of the blower skid and inlet of the flame arrestor, the readings will not be representative due to pressure losses. For example, it is common to have 5 to 10 in-w.c. pressure loss between the inlet of the blower and the inlet of the KOP.
- Blower Amps: Check and record blower amps. If amperage is excessive, begin troubleshooting blower operation.
- Blower Vibration: Note any excessive vibration and report to WPWMA or Landfill Operations Manager so that the blowers may be serviced.
- Blower Hours: Record the hours of blower operation (totalized) displayed at the blower station control panel.
- Flow Meter: Confirm that the flow meter is properly aligned. The OM&M Provider shall periodically clean the flow meter element in accordance with the manufacturer's recommended frequency or site-specific needs to ensure accurate flow rate readings.
- Flame Arrestor:
  - Measure the differential pressure across the flame arrestor.
  - If ports are not installed, the OM&M Provider shall install monitoring ports that are compatible with the ports on the wellheads.
  - If the drain port on the base of the flame arrestor is piped to a condensate drain line, open the valve to remove built-up condensate.
  - If the drain port is not connected to a hard-piped drain line, the OM&M Provider shall coordinate with WPWMA to have a drain line installed. Condensate shall not be drained onto the ground or concrete pad.

  - If differential pressure exceeds 2 in-w.c., the OM&M Provider shall notify WPWMA and clean the flame arrestor element.
  - If the flame arrestor requires cleaning more than once per year, the OM&M Provider shall coordinate with WPWMA to identify the reason for the fouling and attempt to remediate it.
- Enclosed Flare Operating Temperature:
  - Performance tests are required for enclosed flares (the frequency of testing varies by regulatory agency and permit). The OM&M Provider shall obtain the minimum temperature at which the flare is required to operate from WPWMA and air compliance consultant and enter the appropriate flare shut down set point temperature into the control panel. When the flame temperature drops to this level, the flare will shut off and trigger an alarm. This ensures that the flare does not operate below its permitted temperature.
  - Flare controls should be set to automatically select the appropriate thermocouple based on LFG flow rate or other parameter defined by the flare manufacturer.
  - Thermocouples should not be set on manual selection unless specifically directed by the flare manufacturer and agreed by WPWMA and the Manager, Landfill Gas Operations.
- Enclosed Flare Inlet:
  - Record the pressure measured between the outlet of the flame arrestor and the inlet of the enclosed flare stack.
    - If pressure exceeds 3 in-w.c., notify WPWMA of the need to clean the burner tips.
    - If they are clogged or partially clogged, burner tips shall be removed and cleaned per manufacturer recommendations. The OM&M Provider shall not leave the burner tips in place and pressure wash debris back into the burner manifold (i.e., back-flush them).

- Enclosed Flare Shell Temperature:
  - At least once per quarter, measure the temperature of the outside shell of the enclosed flare on a 10' grid and at all visible paint color changes or other suspicious areas using an infrared gun with an appropriate range to determine if there are any "hot spots" or areas of potential burn-through.
  - Notify WPWMA of the presence of any hot spots so that inspection and repair of the insulation may be performed.
- Enclosed Flare Shell Condition:
  - Note whether burn-through or significant corrosion is visible on the outer shell and immediately report it to WPWMA so that troubleshooting and repair can be performed.
  - Annually, shut down and visually inspect the flare internal lining for refractory conditions and photo document.
- Electronic Chart Recorder:
  - Check that the chart recorder is properly recording flow rate to each flare or other control device, control device combustion temperature, and inlet vacuum to the KOP, at a minimum.

  The OM&M Provider shall be responsible for understanding the proper way to download data and ensure that the recording function is working and no data is not lost during the data transfer/review process.

6.3 PRIORITY OF DATA RECORDERS

WPWMA's standard for which data recorders take priority for regulatory compliance is as follows:

1. Electronic chart recorders

2. SCADA recorders

This prioritization is in place due to regulatory reporting considerations and features available in some equipment.

6.3.1 Remote Data Acquisition Systems

WPWMA does not have a written operations manual for its SCADA system. OM&M Providers must understand the operation of the system because of the value it brings in terms of quick visibility of operations data and troubleshooting information for technicians, project managers, and flare manufacturers. The WPWMA will provide annual training on the SCADA system to the OM&M Provider upon request. WPWMA's LFG Operations Manager can be consulted regarding features and past performance and track records of the various systems.

6.4 RESTRICTION ON MODIFYING CONTROL PANELS

Only the flare manufacturer is authorized to perform work inside blower and flare station control panels at the site. Consultants, OM&M Providers, LFGE developers or plant operators, or any other party is prohibited from performing any wiring modification, modifying touchscreens (also known as operator interface panels or OIPs), replacing or modifying PLCs, modifying controls logic, or any other work inside control panels without the express written consent of the flare manufacturer and approval from WPWMA.

SECTION 7
SUBSURFACE GAS MIGRATION MONITORING

7.1 GENERAL

The requirements for gas migration monitoring (e.g., methods, frequency, monitoring locations, compliance triggers, etc.) vary by regulatory agency and permit, and therefore, site-specific monitoring plans and protocols typically are required or recommended. This section of the SOP highlights minimum standards for gas migration monitoring at WPWMA landfills; more stringent requirements dictated by site permit, regulations, or site needs take precedent over these minimum standards.

7.2 SITE-SPECIFIC MONITORING REQUIREMENTS

Prior to beginning work at a site, the OM&M Provider shall obtain the following from WPWMA:

- Copy of the permit that includes the gas migration monitoring requirements and compliance thresholds.
- List and site map showing locations required to be monitored (probes and on-site structures).
- List and map of any off-site structures requiring monitoring.

It is imperative that the OM&M Provider has up-to-date information on which probes and structures are required to be monitored, as this can change over time due to landfill footprint expansions, regulatory agency action, construction of new buildings or other structures on the property, or other situations. For this reason, the OM&M Provider shall request updates to the monitoring plan and monitoring requirements each calendar quarter before monitoring. Or at the monthly meetings.

7.3 MONITORING PROBE CONSTRUCTION

While the construction details of probes is based on engineering design and regulatory requirements, the OM&M Provider is responsible for ensuring that each probe is capped and has a labcock or quick-connect monitoring port.

Static pressure in a probe is an important parameter for gas migration evaluation purposes. Probes cannot be sampled by removing a cap and slipping a sampling tube down into the probe. All probes must be capped and have an acceptable monitoring port installed. Hose barb fittings with no inline valves are not permitted on monitoring probes because built-up pressure in the probe can escape between the time the barbed fitting's cap is removed and the sampling hose of the instrument is attached. If probe piping is not capped or the caps do not have labcock or quick-connect monitoring ports, the OM&M Provider shall work with WPWMA to install these items.

Probe caps should incorporate a means to potentially take liquid levels in the probes. Therefore, caps should be threaded and not glued. Alternatively, the cap may have a port or bushing that allows a liquid level meter probe to be inserted down the probe. Note that liquid level meters that have been used for LFG extraction well liquid level measurements must never be used in groundwater wells or gas probes, as they can introduce contaminants to groundwater or the surrounding soils.

7.4 TIMELINE FOR MONITORING

Gas migration monitoring shall be performed in the first or second month of the quarter, as determined by WPWMA. However, monitoring frequency may be adjusted as directed by WPWMA or a regulatory agency as needed.

7.5 MONITORING PROCEDURES

Unless more stringent requirements are provided in the site-specific monitoring plan or regulations, the OM&M Provider shall adhere to the following:

1. Data collection and handling requirements for gas migration monitoring are consistent with the requirements for wellfield monitoring.

2. Calibrate the gas monitoring instrument as described in Section 5. All calibrations shall be stored in the instrument and uploaded with the rest of the monitoring data to WPWMA's LFG database.

The OM&M Provider must also be aware of all regulatory thresholds for gas concentration prior to performing any monitoring and enter those thresholds into the monitoring device and LFG database to be automatically verified upon data entry.

7.5.1 On-Site Structure Monitoring

On-site structures required to be monitored include the scale house, office buildings, maintenance garage, etc. Non-enclosed structures such as pole barns may be exempted from monitoring if sufficient natural ventilation is present, regulations permit the exemption, and approved by WPWMA and LEA.

If in-place explosive gas monitors are installed in sufficient locations inside structures, monitoring with handheld instruments may not be necessary, if allowed by permit. If permanent monitors are installed, the OM&M Provider shall document the locations of the meters on the floor plan/site map included with the written report to WPWMA and shall perform manufacturer recommended checks/calibrations on the in-place monitors to ensure proper operation.

1. Use site-specific monitoring IDs for all structures and calibrations in accordance with Section 5.5.1.

2. Calibrate the gas monitoring instrument as described in Section 5.8.3. All calibrations shall be stored in the instrument and uploaded with the rest of the monitoring data to WPWMA's LFG database.

3. Hold sample tubing approximately 4 inches from the floor.

4. Monitor:
    a. Along each floor/wall interface
    b. Inside ground level cabinets
    c. Inside closets
    d. At floor drains and plumbing penetrations
    e. Along cracks in concrete slabs

5. The technician shall be aware of the instrument's response time when conducting monitoring and factor this in when investigating detections of methane, especially those that are intermittent or instantaneous/fleeting.

7.5.2 Probe Monitoring

1. Use site-specific monitoring IDs for all structures and calibrations in accordance with Section 5.5.1.

2. Calibrate the gas monitoring instrument as described in Section 5.8.3. All calibrations shall be stored in the instrument and uploaded with the rest of the monitoring data to WPWMA's LFG database.

3. Operate the meter in accordance with the requirements defined in Section 5.8.6, except related to pressure measurement as described below.

4. Do not purge the probe before monitoring. Any methane detected during monitoring shall be reported, as described below.

5. Zero the pressure transducers and attach the instrument hose to the monitoring port. If a labcock valve is installed on the probe cap, open the valve after attaching the hose and observe the relative pressure.

6. Record the initial pressure in the instrument.

    a. Continue to observe the pressure and note any changes.
    b. Record the final stabilized pressure (Note: Probe pressure must be measured before sampling for gas qualities because turning on the instrument's pump while connected to the probe may change the static pressures within the probe.

7. Measure gas qualities as described in Section 5.5. Continue to run the instrument's pump and record the reading when the methane concentration (if detected) has stabilized.

8. Store the stabilized gas reading.

Notify WPWMA immediately if any reading is above 5% methane (100% LEL) by volume.
Provide monitoring report that complies with Section 12.

7.6 REPORTING

The OM&M Provider shall immediately notify WPWMA if any non-zero methane value is detected in any on-site structure (and off-site structure if required to be monitored) so that steps may be taken to protect building occupants. WPWMA shall also be notified by phone or email at the end of the monitoring event if methane exceedances were detected in any of the probes so that any regulatory notifications or remedial actions can be coordinated.

Unless a faster turnaround time is required by WPWMA or regulatory agency, the OM&M Provider shall submit a report detailing the monitoring results to WPWMA within two weeks of the end of each quarterly event. The report shall include the following:

- Brief summary of monitoring event

- Monitoring results
    - Calibration data
    - Static pressure and gas concentration for probes
    - Gas concentrations measured in on-site structures
    - Confirmation that in-place explosive gas meters were checked for proper operation (either by landfill personnel or OM&M technician)
- Identification of any regulatory exceedances
- Site map showing monitored locations
- Summary of any probes that need repair or replacement due to damage

SECTION 8
SURFACE EMISSIONS MONITORING

To comply with NSPS regulations (40 CFR 60.755(c)(1)), the EG, and the California Landfill Methane Rule (LMR) or other state or local regulations that may require it, surface emissions monitoring (SEM) shall be performed quarterly. This monitoring is intended to identify fugitive LFG emissions, but also acts as a GCCS performance test allowing WPWMA to evaluate areas of the collection system that may require upgrades or modifications to further minimize surface emissions.

This section addresses the SEM method required by NSPS/EG/LMR regulations. The OM&M Provider shall review the site-specific monitoring plan and determine the appropriate SEM method and procedures that are required during each quarterly event.

Please refer to Appendix B – Surface Emissions Monitoring Plan Dated July 29, 2013

SECTION 9
LIQUID LEVEL MEASUREMENTS

In order to maximize the efficiency of the vertical LFG extraction wells, WPWMA requires periodic liquid level measurements to aid in evaluating the wellfield.

Also, the OM&M Provider shall establish a baseline liquid level measurement for each new GCCS and for all new wells within the first 2 weeks of well operation.

9.1 OVERVIEW OF LIQUID LEVEL EVALUATION PROCESS

WPWMA's program of evaluating liquid levels in LFG extraction wells is designed to account for the following 3 scenarios, and the calculations are set up to be valid whether or not there is an obstruction in the well casing.

- Scenario A – Obstruction, pinch, or silt in the bottom of the perforated pipe section, and liquid level is beneath the top of perforations.

- Scenario B – Obstruction, pinch, or silt in the bottom of the perforated pipe section, and liquid level is above the top of perforations.

- Scenario C – Obstruction, pinch, or silt is above the top of perforated pipe section. (i.e., 100% obstructed perforations).

9.1.1 Basis of Calculations

The calculations are based on:

- Elevation of the top of perforated pipe
- Length of perforated pipe
- Total length of pipe below ground surface at the time of well installation
- Ground surface at the time of well installation
- Current ground surface elevation
- Field measurements of top of casing (TOC) to ground surface, TOC to liquid, TOC to bottom of well or any obstruction in the well.

Note: *Because the calculations use the elevation of the top of perforated pipe and the elevation of the bottom of the well pipe at time of installation, accurate as-built information is imperative.*

9.2 MEASUREMENT FREQUENCY

Liquid levels shall be measured in GCCS wells annually, as needed or directed by WPWMA if data indicate liquids are impacting gas extraction rates or if the data is necessary to aid in more aggressive troubleshooting, pursuant to the approval by WPWMA. The WPWMA may omit wells from water level monitoring list if prior measurements showed minimal water or change in water levels.

9.3 EQUIPMENT SPECIFICATIONS

At present, the preferred and most common method for measuring liquid levels is to use a down-hole electrical conductance probe with an indicator tape, as described below. The WPWMA may use a down-hole camera if the conductive probe is yielding unrepeatable or questionable results.

To maintain measurement consistency between monitoring events, the user must measure liquid levels from the same point of the well every time (i.e., top of casing, north side, i.e. towards the flare). To account for changes in top of casing elevation over time, WPWMA requires a ground surface elevation and measurement of the height of the top of casing above ground surface.

Note that it is imperative that any liquid level measuring devices used in LFG extraction wells or any portion of the GCCS must be dedicated to leachate and LFG well monitoring. To avoid potentially cross-contaminating soils and groundwater, they must never be used for groundwater well or perimeter gas migration monitoring probe measurements.

9.4 PREPARATION

In preparation of performing liquid level measurements and the related evaluation, the OM&M Provider shall compile as-built information for the wells and current ground surface elevations for all wells (or approximate ground surface elevations based on interpolation of the most recent survey data or field observations if waste filling or other activities have altered ground surface elevations since the date of the most recent survey).

The OM&M Provider shall document field measurements electronically (e.g., web form) or in a log book from which data will be copied to the LFG database at the completion of the field work.

9.5 LIQUID MEASUREMENT PROCEDURE

When preparing to take a liquid level, the technician should:

1. Measure the static pressure in the well and record it so the well can be returned to its prior state after completing the liquid level measurements.
2. Close the wellhead valve. This is particularly important for landfills with an LFGE project.
3. Remove the wellhead or open the access port.
4. Measure and record the depth to liquid from TOC using the liquid level indicator.
    a. Problems that may be encountered:
        i. Foam in the well may cause inaccurate measurements
            1. Mark in field notes “Foam present, liquid level will have to be visually verified using other method” (down well camera).
5. Obtain and record the depth to bottom of well measurements
    a. Measurements are to be made from the TOC to the point where the probe will not progress any farther.
    b. Problems that may be encountered:
        i. Well has soft bottom due to silt or other material.
            1. Record in field book “soft or silty bottom, depth cannot be verified and is estimated”.
            2. A down well camera can be used to attempt to verify well bottom. This activity must be approved by WPWMA before proceeding (non-routine work item).
        ii. Probe may not extend to anticipated well casing depth.

1. Well may be deflected underground so much that indicator probe cannot reach bottom of well casing.
2. Well may be pinched.
3. Probe may be hung up on weld or coupling.
4. Probe may be snagged on a pump component.
5. A down well camera can be used to identify what is holding up the indicator probe. This activity must be approved by WPWMA before proceeding (non-routine work item).

iii. Well appears to be deeper than anticipated.

1. This may be because the well was extended to accommodate additional waste filling.
2. A down-well camera can be used to determine actual depth of well and how much solid pipe was installed to accommodate landfill operations. These activities must be approved by WPWMA before proceeding (non-routine work item).

6. If it was removed, reinstall the wellhead, open the wellhead valve back to pre-measurement static pressure, and record the stabilized static pressure in the log book.

9.6 DATA MANAGEMENT

Liquid level data will be managed by WPWMA and must be compiled within one month of completing liquid level measurements. As described below, two sets of data are required to be uploaded and maintained by the OM&M Provider (As an extra non routine service) unless WPWMA assigns the responsibility to the LFG design consultant or other consultant.

9.6.1 Site Build/As-Built Data

As-Built data that must be entered into the system (or related spreadsheets) includes:

- Well Name (e.g., W-104)
- Well ID (e.g., LivW0104)
- Ground surface elevation at time of well installation
- Depth to bottom of casing at time of installation
- Perforated pipe length

9.6.2 Field Measurements and Related Data

Information obtained at the time of liquid level measurements includes:

- Well Name
- Well ID
- Date of measurement
- Name of personnel obtaining measurements
- Ground surface at well at time of measurements
- Measured height of TOC above ground surface
- Depth from TOC to liquid
- Depth from TOC to bottom of well
- Whether a pump is installed in the well
- Depth from TOC to top of pump

SECTION 10
STARTUP PROCEDURES FOR NEW LFG COLLECTORS

10.1 NEW LFG COLLECTOR INSTALLATION AND STARTUP

10.1.1 Replacement Wells/Collectors

During construction of a GCCS expansion, the OM&M Provider shall maintain regular communication with WPWMA so that valuable information can be shared between all parties, and so that all required wellhead readings are obtained.

During some GCCS construction projects, wells may be abandoned or decommissioned. This communication and coordination is particularly important when an existing LFG collector is slated to be abandoned and a replacement collector will be installed. To avoid potentially missing monitoring for a well that is to be abandoned or decommissioned, the OM&M Provider shall communicate with WPWMA, air compliance consultant, and CQA Consultant during any construction project so that all parties are aware of the monitoring schedule. Only after the OM&M Provider and air compliance consultant have confirmed that the well no longer needs to be monitored may it be abandoned or decommissioned. The current well status shall be updated in the LFG database.

In this situation, it is imperative that initial readings and rechecks are performed before a well is abandoned. Once the required readings and rechecks are obtained, the OM&M Provider shall notify WPWMA, who in turn will notify the CQA observer and construction contractor that the well may be taken offline and abandoned and the new well connected to the collection piping.

10.1.2 Startup Procedure for New Collectors

Before bringing a well/collector online, establish its baseline conditions by obtaining the following information:

- Pressure – Wellhead static pressure with wellhead valve closed
- Temperature – in deg. F
- Gas quality – CH_4, CO_2, O_2 and balance gas
- Liquid levels – Depth to liquid and depth to bottom of the well

After recording baseline conditions and coordinating with the LFGE, slowly bring the well on line:

1. Be careful to avoid making aggressive adjustments to new wells/collectors.
2. Bring the collector on line during a scheduled monitoring event unless other conditions such as regulatory deadlines, the need to increase LFG collection for odor control, etc., warrant a sooner startup.
3. Adjust the wellhead valve so that the wellhead static pressure is set at 0.0 in-w.c. This allows gas to flow, but does not exert a vacuum on the well.
    a. If the methane concentration in the new well/collector falls below the WPWMA SOP methane target (see Section 4.3), close the wellhead valve and an investigation shall be performed to determine why poor gas quality is present at such a low flow rate. Items that should be investigated include but are not limited to:
        i. Amount of well screen available (liquid levels),

ii. Well bore seal condition,
iii. Visual inspection of wellhead and sample train for air leaks, etc.

Notify WPWMA of issues that are identified and propose a remedy. Once the issues are corrected, return the well to operation.

4. Allow the well/collector to stabilize for at least 1 hour and conduct other monitoring. Ensure nearby wells are operating in a manner that is consistent with typical or expected conditions.
5. Return to the well/collector after at least 1 hour and adjust the wellhead static pressure to -0.1 in-w.c.
6. During the next monitoring event (at least 1 week later), depending on gas quality, the wellhead static pressure may be adjusted down to -0.5 in-w.c., based on the professional judgment of the OM&M Provider. Recheck the well/collector 1 to 2 hours later to ensure that the reduction in wellhead static pressure has not negatively impacted gas quality.
7. Additional wellhead adjustments can be made in accordance with the procedures outlined in Section 5 during subsequent monitoring events, if necessary.

10.2 NEW GCCS STARTUP

Starting up a new system requires more effort and diligence than maintaining an existing system. During a new system startup the focus must include:

- Comparing the GCCS Record Drawings with the construction plans and permit plans to determine what has been installed and what variations, if any, have been made from the original design intent.
- Inspecting the system for construction issues (hoses tight, couplers tight, sample ports properly installed, wellhead properly installed, boot clamps tight, if equipped, etc.).
- Establishing the wellfield's operating gas composition and baseline flow rate.
- Preparing the system for operation.
- Bringing the system online. This should be done slowly without damaging mechanical components or biological activity within the landfill.
- Determining the capability of the system and defining its operational parameters.

Note that after the initial test of operation, the OM&M Provider shall bring the system back down and check all fittings, joints, and connections, including bolts, nuts, and clamps. Torque all fasteners to the manufacturer's recommendations. Also, inspect all electrical components for proper operation. Check all electrical connections and confirm that all components and connections remain intact and have not worked loose.

10.2.1.1 LFG Collection System Component Inspection

A. Header isolation valves
   a. Exercise valves to verify full range of motion.
   b. Position header valves in 100% open position for startup.
   c. After startup, return to the valves and confirm that the same negative pressure exists on both sides of each open valve. If the pressures differ, determine whether the valve indicator has been installed correctly and perform additional troubleshooting if necessary.

   d. Notify WPWMA if any header isolation valves are not labeled so that the construction contractor or others can complete this.

B. Header access risers
   a. Inspect cam-locks, monitoring ports, and fittings and ensure they are securely in place. Tighten any loose fittings or sampling ports.
   b. Notify WPWMA if header access risers are not labeled so that this can be done.

C. Drip legs
   a. Verify that each drip leg has the correct amount of water in the u-trap.
   b. Verify caps and flanges are tight.
   c. Verify that monitoring ports are installed on both legs of the u-trap.

D. Mechanical sumps
   a. Inspect fittings and gaskets. If any are found to be loose or missing coordinate with WPWMA for repairs.
   b. Verify that the condensate force main valve is open and ready to accept liquids.
   c. Verify pump is energized and functional.
   d. Record cycle counts for pneumatic pumps and hour meters for electric pumps.

E. Wellheads
   a. Tuning valve – Exercise valve and verify full range of operation.
   b. Flex hose – Verify length, adjust if needed, and verify that clamps are tight.
   c. Sample ports – Inspect for broken or plugged fittings and replace, if necessary.

F. Well bore seals and liner boots
   a. Notify WPWMA or Landfill Operations Manager if well bore has settled or seal appears to be broken.
   b. Verify that all connections between liner boots and wells/other piping are sealed tight, and notify WPWMA of any deficiencies.

SECTION 11
DATA MANAGEMENT, HANDLING, AND REPORTING

11.1 DATA MANAGEMENT AND HANDLING

Proper management of field data is critically important. Manipulation or misrepresentation of field data is a violation of the Clean Air Act, **will not be tolerated, and may be grounds for contract termination, or subject to addition criminal investigation.**

The OM&M Provider's data management team and/or project manager (or WPWMA if OM&M work is performed by internal WPWMA technicians) are required to review, approve, and analyze all collected data in order to bring to the attention of WPWMA any issues of concern and to identify areas where improvements are needed. Issues and updates shall be communicated verbally, by e-mail, and in monthly meetings and reports. The OM&M Provider is also responsible for certain data management administrative tasks, which are outlined below. The following text outlines WPWMA's expectations regarding data management and reporting.

11.1.1 Data Management Responsibilities

The OM&M Provider is responsible for the following data management tasks to the extent it collected that data. If the APCD or WPWMA collected the data or a portion of it, that entity shall be responsible for managing and reporting that data unless other arrangements are made.

- Updating Site Build information, including well construction details, monitoring point coordinates, etc.
- Maintaining Point IDs
- Reviewing data
- Revising erroneous data within the database
- Approving data to lock data from additional editing
- Maintaining, updating, and tracking alternative operating values and alternate compliance timelines within WPWMA's LFG database.
- Administering user permissions within WPWMA's database for users that have access to a facility's data and periodically checking to ensure that all users with access are appropriate. If users are found to no longer require access (e.g., they are no longer employed by the firm, no longer perform work at the site, etc.), the responsible individual must remove those privileges.
- Adding new users with the appropriate level of user access according to the requirements established by WPWMA. User information must include the following, at a minimum:
    - Name
    - Company
    - Position/Title
    - Email address (A company email address is required. No user may have, for example, a gmail.com, yahoo.com, or similar email address.)
    - Telephone number

11.1.2 Data Handling

Each day's monitoring data shall be uploaded to the database within 48 hours of collection. Data files from the monitoring instrument or data recorders (e.g., flare station electronic chart recorders)

may not be sorted, edited, or otherwise modified before uploading to the database. Data edits must only be made within WPWMA's LFG database.

11.1.3 Electronic Data

Electronic data shall be handled in such a way that data integrity is maintained. The OM&M Provider is responsible for backing up all WPWMA data not entered into WPWMA's LFG database on a regular frequency (minimum monthly back-up). All data and reports are the property of WPWMA and will be relinquished to WPWMA upon request or at the close of the project.

11.1.3.1 Preservation of Raw Data Files

Data files from GCCS monitoring events shall be downloaded from the gas monitoring instrument and then uploaded directly to WPWMA's LFG database. **Raw data files from monitoring equipment shall not be altered in any way.** If there are known errors in the data, they are to be edited within the database so that there is a record of the change and documentation of the reason for the edit(s). Because the database has this feature, there is no reason to view, sort, or modify the raw data file in any way before uploading it to the system. **Failure to follow this directive may be cause for termination of the OM&M Provider's contract.**

OM&M Providers are encouraged to retain copies of unaltered data files for their records.

11.1.3.2 Data Upload

Wellfield monitoring data (including blower/flare station, gas migration monitoring, etc.) shall be uploaded to WPWMA's LFG database within 48 hours of monitoring. If a monitoring event spans multiple days, each day's data shall be uploaded within 48 hours of collection (resulting in multiple uploads).

11.1.3.3 Loss of Data

If all of the data from a monitoring event is corrupted, lost, or is unusable, the OM&M Provider will immediately re-monitor the entire wellfield. If data from certain wells is corrupted, lost, or is unusable, the wells for which data are lost must be re-monitored immediately.

11.1.4 Written Log Book Data

In an effort to record conditions that cannot be stored electronically within the monitoring instrument, field technicians are required to keep a site-specific logbook. This logbook is the property of WPWMA, and will be relinquished to WPWMA upon request. The log book must be accessible to the OM&M Provider and WPWMA at all times, as it may be used as a reference for troubleshooting wellfield issues.

A. Logbook requirements:
    1. Waterproof book,
    2. Record entries in logbook using waterproof ink.

B. Requirements for recording data in log book:
    1. Do not remove pages or portions of pages.
    2. Use one log book
    3. Date each page in the top right hand corner.
    4. Technician recording data shall initial each correction.

5. Cross out blank lines on a page when the page is completed.
6. Do not go back to previous pages and insert comments or additional measurements. Always use a new page for each event.
7. Record the following, at a minimum:
   a.) If maintenance is performed, write a description of maintenance performed.
   b.) Record non-tuning efforts for NSPS/EG 5-day corrective actions. Examples include: tighten flex hose, replace sample port, call contractor to regrade header, increase flare vacuum to field, etc.
   c.) Date, time on- and time off-site
   d.) Unusual conditions
   e.) Erosion areas
   f.) Surface depressions
   g.) Document damage to wellheads and/or surrounding surface area discovered during monitoring event or repairs completed during event;
      i. Take photographs of damage and repairs,
      ii. Describe damage,
      iii. Forward photographs of any well that appears to have been damaged by landfill operations to WPWMA within 48 hours.
   h.) Pump cycle counts, if not recorded otherwise in the gas monitoring instrument or other device.
   i.) Summary of discussions with site personnel
   j.) Other pertinent information that in the technician's judgment may be useful at a later date
   k.) Recommendations for non-routine system repairs or upgrades to the GCCS
   l.) Hand drawings that identify specific locations or distances from wellfield components.
8. When the book is full, submit it to WPWMA and start a new logbook.

11.1.5 Data Review

Both the technician and project manager (or WPWMA manager if work is performed by WPWMA personnel) are required to review the data for completeness and accuracy, to identify erroneous or questionable data that may require further action, and to identify exceedances that require corrective action. The technician shall review the data upon upload (i.e., within 48 hours of taking the readings) and the OM&M project manager shall review the data within 120 hours of upload.

If any erroneous data are identified, such as incorrectly typed readings or comments (such as flow rate or temperatures that are entered manually while storing the data), the erroneous readings must be edited within WPWMA's LFG database so that there is a record of the change. The database will prompt the user for a brief explanation of the reason for the edit, and then both the explanation and revised data will be stored.

11.1.6 Data Approval

The technician shall check the uploaded data for correctness and completeness. The designated Data Approver shall then review and approve or take other appropriate actions related to the data within 120 hours of data upload. All data handling, approval, etc., shall be in accordance with WPWMA's Standards and other WPWMA policies that may be implemented in the future. The OM&M Provider shall coordinate with the air compliance consultant, as required, to ensure compliance dates are not missed.

- Coordinating with the LFG database support staff, as necessary to meet WPWMA's requirements.

- Ensuring that the OM&M Provider's staff participates in training sessions that will periodically be required by WPWMA.

11.2 REPORTING AND MEETINGS

All data and monthly and quarterly reports are to be submitted to WPWMA electronically. Hardcopies may also be required at the discretion of WPWMA or to satisfy regulatory agency requirements. The OM&M Provider's technicians, project manager, and other pertinent team members will be provided access and log-in information for the database.

Monthly reports generated as part of this work are to be submitted to WPWMA personnel only, unless otherwise directed by WPWMA. These reports are intended to keep WPWMA personnel informed about the current condition of the GCCS. These documents will be retained for historical reference, and placed in the site's operating record to comply with regulatory requirements.

11.2.1 Daily Logs

The OM&M Provider shall submit Daily Logs of completed activities to WPWMA Landfill Operations Manager at the end of each day or each work week if performing multiple days of work at the site.

11.2.2 Monthly Reports

The OM&M Provider is required to submit a monthly report to WPWMA by the 20th of every month, unless WPWMA requests the report by a different date, for data collected and routine and non-routine work performed during the prior month. At a minimum, reports must include the following:

- General summary of operations of the previous month. Report text shall not include editorializing; the focus shall be on the data, observations, and recommendations.

- Wellfield data
    - Data table for the most recent monitoring, highlighting any NSPS/EG and SOP exceedances. Data table shall include the following:
        - Gas quality data (CH_4, CO_2, O_2, and balance gas)
        - Gas pressures (static, differential, system)
        - Gas temperature in degrees Fahrenheit
        - Flow rate in scfm
        - Comments stored in the instrument for the reading
    - Monitoring summary addressing NSPS/EG thresholds and any surface emissions and gas migration monitoring conducted.
        - List of wells/collectors with NSPS/EG/LMR exceedances

- Liquid level data (if measurements taken that month)
- SEM data and/or gas migration monitoring data (if monitoring was performed that month)
- Blower/flare station
    - Gas composition and flow rates overall and for each control device

  - General operational issues
  - Maintenance activities performed
  - Maintenance activities planned or needed in upcoming month

- SSM forms
- Changes in wellfield conditions that are significant or of concern. This includes an evaluation of trends and variations in data over time.

- Logs and equipment checklists
- Recommended repairs

The report shall include all the monitoring data, checklists, logs, SSM forms, and other supporting information regarding GCCS operations and maintenance. Wellfield monitoring data shall be tabulated and presented in the same general format as output from WPWMA's LFG database.

These reports shall be submitted to WPWMA and other designated parties (air compliance consultant, design engineers, etc., as directed by WPWMA) by the 20th of the following month, unless an alternate schedule is requested by WPWMA. Timeliness of the data is paramount, as WPWMA and other team members will use this data to identify trends and to recognize operational adjustments needed to optimize system performance. In addition, the data may be necessary to satisfy NSPS reporting requirements that have firm deadlines.

11.2.3 Quarterly Reports

The OM&M Provider shall also prepare and submit to WPWMA quarterly gas migration and SEM monitoring reports as detailed in Sections 8 and 9, respectively.

11.2.4 Monthly SOP Meetings

A monthly meeting is required. At a minimum, WPWMA and OM&M Provider's project manager and technicians shall attend. Except for extenuating circumstances, the lead technician shall attend the meeting at the site in person unless directed otherwise by WPWMA. Others who may be invited by WPWMA and whose attendance may be beneficial include:

- WPWMA's Landfill Operations Manager
- Air compliance consultant
- Landfill gas energy project developer (for sites that have a LFGE project in operation)
- Design consultant (if issues related to design or construction are to be discussed)

WPWMA shall:

1. Determine the meeting location and whether the meeting will be held in person or via a conference call with a web-based presentation by the OM&M Provider.
2. Either set the meeting agenda or have input on what topics and the depth of content that will be covered during the meeting. Topics of discussion may include:
   a. Most recent monitoring results and rechecks or corrective actions planned or taken.
   b. NSPS compliance and status relative to operational goals.
   c. Wellfield maintenance recommendations/status, including pump maintenance
   d. Well raisings
   e. SSM summary

f. Blower/flare operation
g. Cover integrity inspections
h. Surface emissions monitoring
i. Gas migration monitoring (probes and on-site structures)

This list is provided for illustrative purposes only. WPWMA and OM&M Provider are free to develop an agenda that is site-specific or most appropriate for the site's needs.

The OM&M Provider shall:

1. Prepare graphs, maps, and tables as needed for use during the meeting, the content of which shall be discussed with and approved in advance by WPWMA.
2. Take notes summarizing the meeting and distribute to the group.

Meeting attendees will review recent and historical data, database maps and graphs of interest, and other pertinent metrics, data, schematics, etc., that may be necessary to describe and evaluate the data and system operation.

11.3 SSM DOCUMENTATION

Startup, Shutdown, and Malfunction (SSM) Plans are required for all NSPS/EG sites under the NESHAP (National Emission Standards for Hazardous Air Pollutants) regulations.

The OM&M Provider shall be familiar with the requirements of the SSM Plan and shall complete the required SSM forms for SSM events that occur when its OM&M technicians are on site. This includes any forced shutdowns performed in order to check fail-safe operation of the blower/flare system or to perform maintenance on the blower or flare system. Forms shall be prepared and submitted to WPWMA and air compliance consultant with the monthly monitoring report or more frequently if requested. The OM&M Provider shall note on the appropriate form whether any actions were taken that were not consistent with the SSM Plan.

For SSM events that occur when the OM&M Provider is not on site, WPWMA and site personnel will ensure the proper forms are filled out. Any questions related to SSM requirements should be directed to WPWMA.

SECTION 12
SUBSURFACE OXIDATION EVENTS

Because subsurface oxidation (SSO) events are serious situations that could potentially damage large areas of the landfill, generate odors, and create community concern, discovery of an SSO must be immediately reported to WPWMA and the Landfill Operations Manager and immediate steps must be taken to remediate it and minimize its impact on the GCCS and landfill.

12.1 SYMPTOMS

The following symptoms are indicative of an SSO:

- Dramatic localized landfill settlement
- Charred or cracked surface cover
- Stressed or dead vegetation in an area that is otherwise properly vegetated
- Smoke or smoky odor emanating from the landfill surface or wellhead
- Drastic or unusual increase in flowing gas temperature
- Significant drop in methane content in the gas
- Abnormal discoloration of wellhead/riser assembly
- Abnormally high CO and ammonia (NH_3) concentration in LFG
- Deformed riser pipes

12.2 NOTIFICATION

If any of the signs of a potential SSO are detected, WPWMA and Landfill Operations Manager shall be immediately notified.

12.3 INITIAL INVESTIGATION

An initial investigation of the situation should include the following:

1. Health and Safety

    a. The first step in investigating a suspected SSO must be to ensure the proper health and safety measures are in place.
    b. A number of additional hazards may be present when an SSO occurs, including exposure to hazardous compounds in smoke or fugitive gas emissions, unstable ground surface due to subsurface subsidence or collapse, potential flames, and others.

2. <u>Do not attempt to douse or flood the wells or area of the suspected SSO with water.</u>

3. Individuals responding to or investigating an SSO should take the following safety precautions, at a minimum:

    a. Consult the site (or project) health and safety plan (HASP) for procedures related to landfill fires and SSOs.
    b. Under no circumstances shall an initial investigation be conducted without first consulting the HASP and implementing appropriate controls and procedures.
    c. Do not breathe landfill gas or smoke. Stand upwind of any emissions.

   d. Wear appropriate PPE. Burns may be caused by hot PVC/HDPE/steel.
   e. **Do not walk or drive heavy equipment or vehicles near wells or any surface depressions until ground stability has been verified**. If necessary, position deck boards near the well to maintain surface stability if it is questionable. The burned waste mass may give way and equipment/personnel may fall into the sinkhole.

4. Do not change the condition of the LFG extraction wells/collectors.

5. Personnel shall conduct a physical inspection that includes the following:

   a. Inspect the nearest extraction well to the suspected SSO location.
   b. Inspect all wells within 500 feet of the nearest extraction well to the suspected SSO location.
   c. Inspect the landfill surface within 500 feet of the nearest extraction well to the suspected SSO location.
   d. Visually inspect for large localized settlement, cracks, holes, collapse, missing components, or areas that could be sources of air intrusion into the waste mass:

      i. Monitoring ports
      ii. Well casing
      iii. Geomembrane boots at wells or other components
      iv. Hoses
      v. Erosion ruts/rills
      vi. Dry soil cracks
      vii. Manways
      viii. Lift stations
      ix. Sumps
      x. Leachate cleanout risers

6. Measure gas quality, pressure and temperature at all wells within 500 feet of the nearest extraction well to the suspected SSO location. Special precautions may be necessary to address high gas temperatures.

7. Measure CO concentrations with colorimetric tubes (Draeger tubes) at all wells within 500 feet of the nearest extraction well to the suspected SSO location.

   a. Gas temperature and interference gases can affect the accuracy of the measurement; therefore, the results of any CO monitoring should be expressed qualitatively only.
   b. Follow tube manufacturer's instruction on the use of pre-filters and/or carbon pre-tubes to minimize the impact of potential interference gases.

8. Infrared Thermometer Survey – Use an IR laser thermometer to measure the temperature of the ground surface in the area of the suspected SSO. Shallow fires or fires that have consumed large amounts of trash will produce elevated surface temperatures. Extreme caution must be taken in these areas due to the potential for the ground to give way.

12.4 DATA ANALYSIS

In order to determine the state of the SSO, the following should be performed or evaluated:

1. Obtain carbon monoxide samples using colorimetric tubes.
2. Temperature gradient between monitored wells.
3. Oxygen gradient between monitored wells.
4. Balance gas (or nitrogen if measured directly) to oxygen ratio gradient between monitored wells.
5. Pressure gradient between monitored wells.
6. Methane to CO_2 ratio gradient between monitored wells.

Analytical data on the gas in the wells in the vicinity shall also be collected using either Tedlar bags or pre-evacuated SUMMA canisters. The analysis shall include fixed gases (CH_4, CO_2, O2, and N_2), CO, and ammonia. Other compounds may be added if necessary. ***Take samples of flowing gas, not stagnant gas.***

12.5 REMOVING SOURCES OF OXYGEN

The key to stopping an SSO once it has begun is to completely restrict oxygen from entering the smoldering waste mass (i.e., snuff it out). Once the initial investigation has been performed and a general sense of the extent of the SSO has been determined, safely begin to restrict further oxygen intrusion using the following method:

A. Shut down any wells that are believed to have been the cause of the SSO. Complete SSM forms as necessary.

B. Shut down all wells within the perceived area of influence (often within approximately 300-500 feet of the suspect well(s)). Complete SSM forms as necessary.

C. Cap or repair any item identified during the physical inspection that may be contributing to oxygen intrusion.

D. Carefully add additional cover soil to areas that show cap integrity issues, if necessary. Work slowly and pay special attention to the ground surface as material placement commences.

    1. During cover placement activities there should be a minimum of two people available: the equipment operator and a line-of-sight person on the ground that is responsible for watching the ground surface as the equipment operator places the soil.

    2. Slowly push soil into the area and compact with the bucket or tracks of the equipment.

E. Verify the air-tightness of all pneumatic devices within 1000' of the suspected SSO area and verify system air consumption is consistent with times prior to the event and during.

12.6 THINGS TO AVOID

1. Flushing the well with water. Flushing the well with water can potentially clog the well. It will also generate steam, pressure, and odor when water hits the SSO area.

2. Excavating soil in the SSO area. Excavation will allow additional oxygen to enter the already smoldering waste mass and can potentially cause it to auto-ignite.

3. Venting. Do not remove the wellhead to vent the well. Wellfields are typically under negative pressure. Residual vacuum may exist in the waste mass for a period of time when wells are closed. If the wellhead is removed to vent, it is highly possible that the residual vacuum in the area will pull ambient air into the waste mass, adding oxygen to the SSO.

4. Dry ice application. While dry ice may have a temporary cooling effect on the physical well casing, it will have little to no effect extinguishing the SSO

5. Introduction of water into open landfill cap or cover soil fissures. Applying water to open fissures in the cap where an SSO exists can create a plume of highly odorous steam and could potentially impact slope stability. It is also dangerous to bring a heavy, rubber tired water truck to the area to apply water. The steam created can be dangerous to workers in the immediate area. If an open cap fissure exists in an SSO area, follow the procedure for placing cover soil described above. Removing the pathway for oxygen intrusion is the most effective way to extinguish the SSO.

12.7 CONTINUED MONITORING

Site personnel or the OM&M Provider should visually monitor the area of the suspected SSO at least three times a week until the SSO has been fully remediated. In addition, the wells closest to the SSO area and adjacent wells should be monitored three times a week for two weeks. The wells should be monitored for gas quality, temperature, and CO.

As the SSO subsides, residual CO will remain in the waste mass for weeks and possibly months. Elevated CO levels are not a reliable indicator that an SSO is still in progress. However, CO levels should generally decline with time if the oxidation has been terminated.

Once SSO indicators are no longer noted, the wells in the SSO area and the adjacent wells should be monitored once per week for at least 4 months before returning to a normal monitoring schedule.

12.8 REPAIRS

Repairs should be made to the SSO area, as necessary. The OM&M Provider shall visually inspect the following:

- Wellheads and lateral piping
- Cover soil and geosynthetics
- Other items within the SSO area

Findings and repair options shall be forwarded to WPWMA and Landfill Operations Manager who will facilitate repairs, as appropriate.

12.9 TIMELINE

It is important that a structured SSO monitoring plan and diligent adherence to the plan be carried out to return the wellfield to SOP operations as soon as possible. However, it is advisable to take time and slowly ensure the SSO is fully extinguished, and that the anaerobic bacteria population in the area has recovered and is consistently producing gas.

The severity of the SSO, the age of the waste, moisture content, and a number of other variables will all determine how long it takes the wellfield to regain compliance with the SOP. Experience has

shown that the timeline from the point when the SSO is identified and extinguished to the point when the wellfield resumes normal operations can vary from 2 to 3 weeks up to (in some serious SSO situations) 1 year or more.

SECTION 13
GCCS INSPECTION AND MAINTENANCE

Regular inspection and maintenance of GCCS components is critical to the consistent and reliable operation of the system. Maintenance procedures are intended to be preventative in nature and to identify problems before they impact the performance of the GCCS or its components. Failure to perform proper inspections and maintenance may result in failure of critical components that could render the GCCS inoperable or reduced operational life. Failure to perform proper inspections may also cause permit and/or air compliance violations.

13.1 COMPONENT INTEGRITY CHECKS

Inspections are intended to identify conditions that impact the effectiveness or efficiency of the GCCS. Inspection data will be used by WPWMA to identify possible system improvements and to schedule repairs.

A. Record issues found during inspections in the monthly O and M reports.

B. Notify WPWMA immediately if an identified problem could cause a GGCS emergency, regulatory exceedance, or non-compliance with site-specific permit requirements or federal, state, or local regulations.

13.2 TEMPORARY REPAIRS

The application of duct tape and/or silicone to malfunctioning joints is considered a short term (15-days or less) "quick fix" and is not an acceptable long-term repair option. Once a joint malfunction is identified, notify WPWMA of the situation and install a permanent replacement immediately. If duct tape is used to temporarily repair a joint, the duct tape will be dated with a permanent marker to verify the duration the tape has been in place.

13.3 COVER INTEGRITY AND WELL INSPECTION (MONTHLY)

WPWMA requires all sites to perform monthly cover integrity inspections, regardless of whether they are subject to the NSPS/EG requirements listed in 40 CFR 60.755(c)(5).

The OM&M Provider shall conduct these inspections during routine OM&M activities and report any findings immediately following the event to the Landfill Operations Manager or WPWMA so that the appropriate repairs can be performed. The verbal report shall include an accurate description and location of the repair needed. The OM&M personnel shall also make notes of the repairs needed within the log book.

13.3.1 Cover Integrity

Visually inspect the surrounding cover surface integrity:

- Pay special attention to the cover located directly around each well casing, noting signs that the soil is desiccating or pulling away from the well casing.

- Note surface water erosion, ponding, leachate breakouts, or staining.

- Note any settlement around the well casing. Immediately report settlement to the Landfill Operations Manager or WPWMA. Soil should be immediately applied to the area by site personnel or a contractor to match the surrounding grade.

13.3.2 Well Casings

- Visually inspect above grade well casings and surrounding areas for signs of damage, deterioration, or potential problems.

- Use below grade inspection techniques when GCCS monitoring data indicates it is appropriate. (This type of non-routine work must be approved by WPWMA in advance.)

13.4 CONTROL DEVICE SYSTEM OPERATION

GCCS control devices (blower/flare, compression skids, etc.) all have safety features built into the system that insure proper operation of components at tolerances supplied by the manufacturers. These safety features (presence of flame, bearing temperature, flashback monitoring, flame temperature, louver control, fail-safe valve operation, etc.) may individually or wholly be compromised if the flare is not operated in automatic mode. Automatic mode ensures that the flare is operating safely, and the system will properly go through a shutdown procedure if tolerances do not meet programmed set points. **Operation of the flare in manual mode bypasses most, if not all, of these safety features and is not allowed except for the following situations:**

A. If the system will not operate in automatic mode, stop the system, and begin troubleshooting to determine the cause.
    1. If a cause cannot be readily found, immediately notify WPWMA or Landfill Operations Manager of the situation. Do not restart the system.
    2. Contact the flare manufacturer to perform troubleshooting and/or to begin repair of the system.
    3. Prepare an SSM form, if applicable.

    To perform other tests or purposefully operate the system in limp mode for greater compliance reasons. This type of operation may only start after WPWMA LFG Operations Manager has agreed to the non-standard operation.

13.5 MONTHLY INSPECTION AND MAINTENANCE

The following work is required to be performed as part of the routine OM&M work on a monthly basis. Issues observed during monthly inspections shall be documented and included in the monthly report or communicated to WPWMA otherwise as requested. Repairs shall be made as expeditiously as possible, and in some cases, if possible, shall be performed during the routine monitoring event. All data collected (e.g., pump cycle counts, force main pressures, condensate knockout pot pressures, blower operating parameters, etc.) shall be recorded, tabulated, and graphed (if appropriate) and included in the monthly report for record keeping and future troubleshooting purposes.

1. LFG Wells/Collectors: Inspect and repair wells/collectors, wellheads, and related components as detailed in Section 5.7. Items to be inspected include:
    a. Wellhead valve
    b. Flexible hose

c. Sample ports, thermometer (if permanently installed), and related components
d. Well casing
e. Mechanical joints and fittings
f. Flow measurement devices
g. Well ID label

2. Dewatering Pumps
    a. Record cycle counter readings, tabulate, and chart historical cycle counts for inclusion in the monthly report to be submitted to WPWMA.
    b. Note and repair kinked discharge hoses, leaking discharge hoses and fittings, leaking air supply components (regulators, fittings, valves), etc.
    c. Identify if pump is working. If stalled, attempt to return it to operation. If it is necessary to pull the pump for inspection or cleaning, coordinate that work with WPWMA so that it can be performed according to the OM&M Provider's contract.

3. Condensate/LFG Well Dewatering Lines
    a. Inspect air and force mains/gravity lines for proper operation.
    b. Open air supply line isolation valves monthly to remove any built-up condensation. Use caution as this line will have significant pressure.
    c. PVC pipe, fittings, and valves may not be used on air supply lines due to safety concerns. If PVC pipe, fittings, or valves are installed on any air supply systems, notify WPWMA so that they can be replaced with metal or HDPE components.

4. Condensate Sumps/Pump Stations
    a. Inspect all sumps and traps to confirm that vacuum is present at expected and appropriate values.
    b. Confirm that sump components (gaskets, lids, bolts, etc.) are tight and not leaking.
    c. Check pump to confirm proper operation. If the pump is pneumatic, confirm that adequate air pressure is available to the pump. If the pump is electric, check the control panel to ensure the pump is properly functioning.
    d. Record pump cycle counts or hour meter measurements and verify that the pump is advancing liquid.
        i. If no liquid advancement is found where it normally exists, investigate to determine if pump is operational.
        ii. Pull and inspect pumps for damage/wear when problems are suspected or as part of the routine pump cleaning service for the site.
    e. Check that all valves are operational. This can only be accomplished by regular exercise of the valve.
    f. No PVC or CPVC fittings or valves may be used on any air supply lines. The OM&M Provider shall bring to the attention of WPWMA if PVC or CPVC components are installed on compressed air systems and coordinate replacing those components as soon as possible.

5. Air Compressor
    a. The OM&M Provider shall check the air compressor when doing blower/flare monitoring or maintenance:
        i. Manually bleed liquid from the system components
        ii. Notify WPWMA if it appears service is warranted or there are operational issues that need to be addressed.
    b. Other service that may be required and performed by either site personnel or others include:

i. Check oil level
ii. Clean all filters
iii. Inspect and adjust belts
iv. Record hour meter information, if equipped
v. Inspect air dryer for proper operation (if installed). If a desiccant dryer is being used, check the date of the last media change. If new media is needed or service is due, notify WPWMA or Landfill Operations Manager.

6. Blower Station and Related Piping

a. **Automatic Mode:** Ensure the blowers and flare are operating in "Auto" mode. (See Section 7.2)
   i. Never allow the system to operate in "Hand" or "Manual" mode, except during short-duration testing. Operation in anything other than Auto mode is against WPWMA policy.
   ii. Failure to comply with this will be cause to immediately terminate the OM&M Provider's contract.
b. **Condensate knockout pot (KOP)**
   i. See Section 7.2.
c. **General blower station operation**
   i. Check blower/flare station operation in accordance with the manufacturer's requirements.
   ii. Troubleshoot or coordinate with WPWMA to troubleshoot any recurring alarms, shutdown conditions, or fluctuating flow or vacuum conditions.
   iii. Notify WPWMA of any required maintenance or preventative maintenance needed on the system.
   iv. Inspect for proper operation during each monitoring event.
   v. Ensure that all moving parts are properly lubricated per manufacturer recommendations.
d. **Control Panel**
   i. Verify all indicator lights, gauges, and other components are operational during monthly monitoring.
   ii. Check for and remove debris, rodents, and insects that may have entered the panel.
e. **Blower Rotation and Usage**
   i. Rotate which blowers are being used so that the primary and backup blowers are in use approximately the same amount of time and are kept in good working order.
f. **Blower Greasing**
   i. The OM&M Provider shall know the requirements for greasing the particular blower in use, and shall consult with the blower manufacturer to confirm the requirements based on the unit's Shop Order No., if necessary.
   ii. In accordance with blower manufacturer's instructions, ensure blower bearings are properly lubricated with the appropriate grease/oil.

g. **Blower Bearing Temperature**
   i. Inspect for excessive bearing temperature (relative to design or manufacturer's suggested operating temperature) during each monitoring event.
      1. If bearing thermocouples are installed, record the temperature displayed on the control panel touchscreen.

2. If bearing thermocouples are not installed, collect a temperature reading using an infrared laser thermometer at a consistent location on the bearing cap.

ii. Tabulate and plot historical temperature trends in an Excel spreadsheet to be maintained on WPWMA's LFG database.

h. **Blower Vibration**
   i. Inspect for excessive vibration relative to normal operations.
   ii. If excessive vibration occurs, switch to the other blower and notify WPWMA of the need for repairs.

i. **Blower/Motor Safety Devices**
   i. Ensure safety devices (belt shrouds, cages, shields, etc.) are installed and functioning properly on a monthly basis.
   ii. If safety devices are not installed or are not functioning properly, notify WPWMA and Landfill Operations Manager immediately so that repairs can be performed.
   iii. Document and repair/replace, as necessary.

j. **Chart Recorder** (See Section 7.2)

k. **Flow Meter** (See Section 7.2)

l. **Flame Arrestor** (See Section 7.2)

m. **Thermocouples**
   i. Inspect for indication of thermocouple failure monthly.
   ii. If erratic operation, check tightness of wiring.
   iii. Replace if necessary.

n. **Valves**
   i. Exercise all valves monthly, and during each forced shutdown.
   ii. Exercise valves across the complete operational range of the valve.

7. **Enclosed Flares** (See Section 7.2 for detailed requirements.) The OM&M Provider's personnel shall be thoroughly trained in the operating principles and troubleshooting of enclosed flares. Demonstration of competency and training certification is required by WPWMA.

   a. **Operating Data Review**
      i. Review the recent flow rate, pressure, and other data via the remote data acquisition system or the digital chart recorder.
      ii. Identify shutdowns and the cause of the shutdowns in order to determine if additional troubleshooting is necessary. Discuss any findings with WPWMA and include a brief summary in the monthly report.

   b. **Thermocouple Selection**
      i. Enclosed flares have multiple thermocouples located at different elevations. Systems controlled by a PLC will automatically choose the appropriate thermocouple based on the flow rate of LFG to the flare. The upper thermocouple is reserved for the highest flow rates and the lowest thermocouple is used for the lowest flow rate range.
      ii. Confirm that that thermocouple selection is set to "Auto".
      iii. If a thermocouple is being manually selected, WPWMA requires the OM&M Provider to confirm this approach with the flare manufacturer and to provide a written explanation to WPWMA and WPWMA's Manager, Landfill Gas Operations as to why this is the preferred mode of operation and why the Auto selection mode cannot be used.

c. **Pilot System**
   i. Verify supply of pilot gas during each monitoring event.
   ii. Coordinate with WPWMA or Landfill Operations Manager if the propane tank needs to be refilled.

d. **Flare Tips:** Visually inspect flare tips monthly to ensure they are operating properly and are not obstructed with debris.

e. **UV Scanner**
   i. Verify proper operation during each monitoring event and forced shutdown.
   ii. Clean bulb and sight tube, where applicable, annually.

f. **Dampers**
   i. Verify proper set points
   ii. Observe operation of flare for proper damper (louver) operation. Harmonic vibration, "popping" sounds, or flames emanating from the top of an enclosed flare are obvious signs of improper damper operation or settings. If these are observed, contact the flare manufacturer for troubleshooting assistance.

g. **Monthly Testing for Backup Devices:**
   If an enclosed flare is used as a backup control device to an LFGE plant, the flare must be operated monthly for a period of time to ensure proper operation, remove moisture from the shell insulation, lubricate blower bearings (for the rare situation in which a separate blower is used for the flare system), and drive out animals and birds that will nest in and damage the unit.

   i. Contact LFGE plant operations personnel to schedule the startup of the enclosed flare. This procedure may require the plant operator to reduce plant output for a period of time to ensure vacuum set point is unaffected.
   ii. Start the flare. Pay close attention to startup procedure, and ensure flare has ignited.
   iii. Allow flare to run for a minimum of 1-hour.
   iv. Shut down flare, and alert LFGE plant operator to resume prior plant output. Ensure vacuum set point is unaffected.
   v. Prepare SSM form, if applicable.

8. **Spare Parts Inventory:** Update the flare station and wellfield spare parts inventory and provide it to WPWMA or Landfill Operations Manager, along with recommendations for additional parts or materials that should be ordered and kept on site.

13.6 QUARTERLY INSPECTION AND MAINTENANCE

1. **Belt Drive Blowers**
   a. Inspect and adjust drive belts quarterly.
   b. Document the condition of the belts and replace as necessary.

2. **Direct Drive Blowers**
   a. Inspect for wear or damage quarterly.
   b. Document conditions and replace parts as necessary.

3. **Combustible Gas Monitoring Systems in On-Site Structures**

a. Stand-alone system
    i. Inspect and test for proper operation.
    ii. Inspect and test quarterly.
        1. Apply a span gas to activate alarm and adjust the activation set point, if applicable.
        2. Calibrate according to the manufacturer's recommendations.
    iii. If units fail to calibrate or are non-functional, notify WPWMA and Landfill Operations Manager immediately so that units can be replaced and alternate safety measures may be implemented, if necessary.
b. Alarm monitoring system
    i. Inspect quarterly.
    ii. Test annually for proper operation.
    iii. Calibrate according to the manufacturer's recommendations.
b. If units fail to calibrate or are non-functional, notify WPWMA and Landfill Operations Manager immediately so that the units can be replaced and alternate safety measures may be implemented, if necessary.
c. If units are not installed, notify WPWMA immediately.

4. Flow Meter
    a. Remove the flow meter element and clean it quarterly per manufacturer recommendations. Ensure that the probe is properly aligned when reinstalling it.

5. Access Points: Inspect quarterly, at a minimum.
    a. Inspect collection piping access points (sumps, access risers, manholes, etc.) for integrity (gaskets, flanges, piping, etc.).
    b. Inspect leachate clean-out risers, manholes, tanks, etc. for gas leaks or possible points of air intrusion.
    c. Any areas of apparent gas leaks or air intrusion should be noted and brought to the immediate attention of WPWMA and/or Landfill Operations Manager.

13.7 SEMI-ANNUAL INSPECTION AND MAINTENANCE

1. Control Panel: Check for loose wires and tighten, as necessary, taking care to not over-tighten any connections.
2. Flare Thermocouples
    a. Confirm proper operation of thermocouples.
    b. Check for heat damage.
    c. Check thermocouple wiring and terminal connections.
3. Valves (Header, Condensate System, Flare Station)
    a. Exercise valves through their full range of motion to ensure proper operation.
        i. Perform semi-annually
        ii. During this task, monitor system pressure on both sides of the valve to verify that the valve is operating as intended.

13.8 ANNUAL MAINTENANCE

1. Open Flare Pilot System
    a. Inspect and clean pilot. Remove debris, spider webs, etc.
2. Flow Meter
    a. Flow meters are maintenance items that need to be serviced and calibrated at regular frequencies. Proper flow meter performance is imperative in order to properly

report emissions (GHG, Title V, etc.), gauge system performance against expectations (metrics), and for LFGE purposes. Without proper maintenance, flow measurement accuracy declines over time.

b. Calibration requirements
    i. Flow meters shall be calibrated per manufacturer's recommendations, or annually at a minimum.
    ii. Calibration usually requires removal of the flow measuring device from the gas conveyance pipe.
    iii. Only qualified individuals may perform field calibrations.
    iv. A calibration certificate shall be issued for all calibrations.
c. Insertion type meters (heat probe)
    i. Pull and clean the probe quarterly according to manufacturer recommendations.
    ii. Verify proper position and orientation prior to removal and following replacement.
    iii. Verify meter is properly zeroed by forcing shutdown and observing the recorded flow. Flow should be zero during a forced shutdown.
d. Pressure transmitter type
    i. Verify consistent measurements and that the meter zeroes properly when system is down or during forced shutdowns.

13.9 SPARE PARTS

The OM&M Provider shall keep an inventory of spare parts on site for the GCCS and shall consult the site-specific OM&M manual(s) for each system component to ensure that the recommended spare parts are included in the inventory. When parts are used from the inventory, the OM&M Provider shall reorder those parts as soon as possible and after confirming with WPWMA whether parts are to be purchased directly through WPWMA vendors. The OM&M Provider is required to always keep WPWMA informed of any spare part orders.

The OM&M Provider shall prepare and submit to WPWMA on a quarterly basis report identifying the type and number of spare parts on-hand.

At a minimum the spare parts inventory shall include, but is not limited to:

13.9.1 Control System

1. Drive belts
2. UV scanner/bulb (where installed)
3. One thermocouple of each type/size present on control device
4. Propane for pilot system
5. Compressed gas (nitrogen or compressed air) for pneumatic valve operation
6. Flexible shaft coupler
7. Blower bearing set (front and back) for each blower on-site
8. Indicator light bulbs
9. Media for recording device

13.9.2 Collection System

1. Wellhead flex hoses
2. Flex hose clamps

3. Sample ports (brass hose barbs or plastic quick connect fittings)
4. Sample port stoppers (silicone plugs) if using hose barb equipped wellheads
5. Thermometer (where installed)
6. Wellheads
7. Elastomeric (Fernco) couplers
8. Band clamps
9. Gaskets
10. HDPE pipe/fittings
11. Bolt kits

SECTION 14

LEACHATE COLLECTION SYSTEM OPERATIONS

The Leachate Collection and Recovery System (LCRS) has been installed at the WPWMA Landfill in order to comply with the requirements of Title 27 of the California Code of Regulations. This requires that owners/operator of landfills remove leachate from the landfill in order to maintain liquid levels on the subliner to no more than 1 foot of liquid (for Modules 1, 2, 10, 11-15) and 3 inches (for Modules 16, 5 and future modules). The below procedures have been developed to maintain proper operation of the LCRS to meet the requirement.

14.1.1 Pump Operation

14.1.1.1 In order to maintain proper liquid levels the pumps (pneumatic or electric) must be monitored and inspected on a weekly basis for proper operation. These inspections should include the following: individual pump station inspection, gallons removed since previous visit, electronic liquid level data (if applicable), and amperage while in operation and operating hours.

14.1.1.2 Maintenance of the pumps shall be performed in accordance with the manufacturer's specifications and repaired if the pumps appear to be malfunctioning.

14.1.1.3 Until such a time as dedicated power is available to all locations, the pumps shall be operated at the frequency required to maintain proper liquid levels using portable generators.

14.1.2 Liquid level monitoring

14.1.2.1 Liquid level monitoring at the leachate sumps shall be performed on a monthly basis unless liquid level sensors with direct level readouts are present. This will verify that the liquid levels are being maintained at the required regulatory level.

14.1.2.2 Liquids levels shall be verified using a sound actuated liquid level meter which shall be lowered into the casing of the leachate riser until liquids are observed by an audible tone. If a different manual level meter is to be used, it must be approved by the WPWMA manager.

14.1.2.3 Liquid level on the liner shall be determined by comparing the level observed to the bottom depth and calculating the level based on the following calculation: measured bottom depth minus observed liquid level divided by the slope of the module's side slope. For a 3:1 side slope, the calculation looks like this:

(BD-LD)/3=liquid on liner.

14.1.2.4 If liquid level monitoring results indicate an elevated liquid level (greater than the allowable depths noted above) the pump operational frequency (if site power is not yet available) shall be re-evaluated by WPWMA and the operator in order to increase liquid removal.

14.1.3 Force Main Inspections

14.1.3.1 On a weekly basis the force main shall be inspected for leaks or damage, which if any is noted the system will be shut-down and the WPWMA manager shall be immediately notified. It is the responsibility of OM&M Provider or WPWMA manager to determine if repairs can be performed or if the system will need to remain off line. If the system cannot be repaired within 48 hours, WPWMA will notify the appropriate regulatory agencies if needed.

14.1.3.2 On a weekly basis, OM&M Provider shall obtain total gallons removed from the landfill at the outfall location. This data is required for reporting purposes and shall be submitted to WPWMA on a monthly basis for inclusion in the semiannual reports.

14.1.3.3 On a monthly basis OM&M Provider shall perform collection of pipeline back pressure readings from the force main at selected locations to determine if fouling/plugging of the pipeline is occurring. If needed, additional pressure gauges shall be installed by OM&M Provider upon approval from the WPWMA manager. This data is critical in maintaining and verifying proper system operation. The OM&M Provider shall develop a system curve based on pipe throughput and measured pressure levels along the pipeline, and chart the current period's readings against that system curve. If pressure levels indicate greater than 10% deviation from the system curve, the OM&M Provider shall notify the WPWMA LFG Operations Manager and the WPWMA may request additional investigation or cleaning of the force main.

14.1.3.4 If cleaning of the force main is indicated based on pressures, OM&M Provider or WPWMA will choose the locations for performing the cleaning using high pressure water, snaking or other approved method. This work will be coordinated through WPWMA and is performed as needed.

14.1.4 Flow meter monitoring and inspections

14.1.4.1 On a weekly basis all flow meters shall be inspected and total gallons removed will be recorded. If the meter indicates a low flow condition the meter will be cleaned and tested.

14.1.4.2 On an annual basis, or more frequently if warranted, the flow meters will be tested for accuracy. This will be done by performing a bucket test and comparing the volume pumped into a graduated cylinder or drum and comparing the value on the meter to the level in the drum. This work will be coordinated with the WPWMA manager and is performed by OM&M Provider as part of the annual system performance test and is not considered routine maintenance.

14.1.5 Monthly Monitoring of Leachate Water Quality

14.1.5.1 On a monthly basis, the WPWMA will sample each location for the following water quality parameters in accordance with the requirements of the site Waste Discharge Requirements (WDR) by grab sample method from the pumping system: pH, Electric Conductivity (EC), Turbidity and Temperature. This information shall be reported to the Water Board, retained and sent to the others as required.

14.1.6 Annual LCRS Performance Testing

14.1.6.1 In accordance with the requirements of Title 27 of the CCR, on an annual basis the system will be tested for proper operation. This test shall be performed to verify that the system is operating normally and no fouling/plugging of the LCRS is occurring in the individual modules. The test shall be performed by installing dye, salts or other additive into the cleanouts on the opposite side of the landfill from the pumping stations, or into the extraction wells on the module where a liner system is present and then observing the discharge from the pumps for evidence of the injected material. OM&M Provider will record the time necessary for the test additive to transit the waste mass. The actual procedures for this work will be agreed upon by WPWMA, site personnel and the contractor performing the test.

Appendix A – Landfill GCCS Design Plan

cornerstone
A TETRA TECH COMPANY

Building lifetime relationships with our clients and employees.

Landfill Gas Collection and Control System Design Plan

Western Regional Sanitary Landfill

October 2016

Prepared for:
Western Placer Waste Management Authority
3033 Fiddyment Road
Roseville, CA 95747

7600 Dublin Blvd., Suite 200
Dublin, CA 94568
(877) 633-5520

REPORT CERTIFICATION

Landfill Gas Collection and Control System Design Plan

Western Regional Sanitary Landfill
Lincoln, California

The material and data in this report were prepared under the supervision and direction of the undersigned.

Cornerstone Environmental Group, LLC

Craig W. Young, P.E.
Project Manager

REGISTERED PROFESSIONAL ENGINEER
PAUL JAMES STOUT
No. C052827
Exp. 12/31/16
CIVIL
STATE OF CALIFORNIA
10/28/16

Paul Stout, P.E.
Regional Vice-President

TABLE OF CONTENTS

REPORT CERTIFICATION II

LIST OF TABLES VI

1 INTRODUCTION 7

1.1 PURPOSE OF REPORT 7
1.2 COMPLIANCE SUMMARY TABLES 7

2 EXISTING SITE CONDITIONS 8

2.1 LANDFILL DESCRIPTION 8
2.2 LANDFILL GAS COLLECTION AND CONTROL SYSTEM 9
2.2.1 EXISTING GAS COLLECTION AND CONTROL SYSTEM 9
2.2.2 PROPOSED GAS COLLECTION AND CONTROL SYSTEM IMPROVEMENTS 10

3 FUTURE SITE DEVELOPMENT 11

3.1 GCCS DEVELOPMENT PLAN 11
3.2 LANDFILL GAS CONTROL SYSTEM EXPANSION CAPABILITIES 11
3.3 INTERIM LANDFILL GAS CONTROL SYSTEM DESIGN CONSIDERATIONS 11
3.3.1 GAS COLLECTION SYSTEM EXPANSION DURING INTERIM CONDITIONS 11
3.3.2 COMPATIBILITY WITH REFUSE FILLING OPERATIONS 13

4 COMPLIANCE REVIEW AND EVALUATION 14

4.1 COMPLIANCE WITH §60.759(A)(1) 14
4.1.1 CONTROL SURFACE EMISSIONS 14
4.1.2 DEPTHS OF REFUSE 14
4.1.3 LANDFILL GAS GENERATION RATES AND FLOW CHARACTERISTICS 15
4.1.4 LANDFILL COVER PROPERTIES 15
4.1.5 LANDFILL GAS CONTROL SYSTEM EXPANDABILITY 15
4.1.6 CONDENSATE MANAGEMENT 16
4.1.7 ACCESSIBILITY 16
4.1.8 COMPATIBILITY WITH REFUSE FILLING OPERATIONS 16
4.1.9 INTEGRATION WITH CLOSURE END USE 16
4.1.10 AIR INTRUSION CONTROL 17
4.1.11 CORROSION RESISTANCE 17
4.1.12 FILL SETTLEMENT 17
4.1.13 RESISTANCE TO DECOMPOSITION HEAT 18

4.2 COMPLIANCE WITH §60.759(A)(2) 19
4.3 COMPLIANCE WITH §60.759(A)(3) 20
4.3.1 ASBESTOS AND NON-DEGRADABLE MATERIALS 20
4.3.2 NONPRODUCTIVE AREAS 20
4.4 COMPLIANCE WITH §60.759(B)(1), (2), AND (3) 20
4.4.1 LANDFILL GAS EXTRACTION COMPONENT CONSTRUCTION 20
4.4.1.1 Materials 21
4.4.1.2 Component Sizing 21
4.4.1.3 Component Loading 21
4.4.1.4 System Expansion 21
4.4.1.5 Component Perforation 22
4.4.1.6 Air Infiltration 22
4.4.2 LANDFILL GAS EXTRACTION COMPONENT INSTALLATION 22
4.4.2.1 Component Placement 22
4.4.2.2 Leachate 22
4.4.2.3 Vertical Wells 23
4.4.2.4 Horizontal Wells 23
4.4.2.5 Component Short Circuiting 23
4.4.2.6 Gravel Backfill 24
4.4.3 LANDFILL GAS EXTRACTION COMPONENT CONNECTIONS TO LFG TRANSMISSION PIPING 24
4.5 COMPLIANCE WITH §60.759(C)(1) OR (2) 24
4.5.1 EXISTING LANDFILL GAS FLOW RATE DATA 24
4.5.2 FUTURE LANDFILL GAS FLOW RATE ESTIMATES 25
4.6 ALTERNATIVES AND COMPLIANCE WITH §60.752(B)(2) 25
4.6.1 SUBMIT A DESIGN PLAN 25
4.6.2 ALTERNATIVES TO THE NSPS 25
4.6.3 SPECIFICATIONS FOR ACTIVE COLLECTION SYSTEMS 26
4.6.4 INSTALLATION OF LANDFILL GAS COLLECTION AND CONTROL SYSTEM 26
4.6.5 CONTROL SYSTEMS 27

LIMITATIONS 29

TABLES 30

APPENDICES

APPENDIX A 2016 GCCS DESIGN DRAWINGS

APPENDIX B ALTERNATIVES TO LANDFILL NEW SOURCE PERFORMANCE STANDARDS (NSPS) REQUIREMENTS

APPENDIX C LANDGEM LANDFILL GAS EMISSIONS MODELING

APPENDIX D LANDFILL METHANE RULE (LMR) SURFACE EMISSIONS MONITORING PLAN

List of Tables

Tables

Table 1 Regulatory Compliance Checklist
Table 2 Landfill Gas Collection and Control System Design Review Checklist

1 INTRODUCTION

1.1 Purpose of Report

This Landfill Gas Collection and Control System (GCCS) Design Plan update was prepared by Cornerstone Environmental Group, LLC (Cornerstone) on behalf of the Western Placer Waste Management Authority (WPWMA). This Plan update follows the requirements of the New Source Performance Standards (NSPS) for the GCCS at the Western Regional Sanitary Landfill (Landfill) located in Lincoln, California and was prepared pursuant to 40 Code of Federal Regulations (CFR) Part 60, Subpart A (General Provisions), and Subpart WWW (Standards of Performance for Municipal Solid Waste Landfills). This GCCS Design Plan supersedes all other previously prepared submittals pertaining to the GCCS design and is the document that will govern the operating, monitoring, and recordkeeping standards for the GCCS at the Landfill.

1.2 Compliance Summary Tables

A summary of the pertinent NSPS regulations and implementation of these regulations at the Landfill is presented in Table 1 of this Plan. Additionally, location references of the regulations in this Plan and in Appendix E of the NSPS enabling documents are presented in Table 1.

A Design Review Checklist from *Training Course for Landfill Gas NSPS/EG Regulatory Personnel to Review GCCS Design Submittals, North Carolina State University, September 1998* is provided as Table 2.

2 EXISTING SITE CONDITIONS

2.1 Landfill Description

The Landfill, owned by WPWMA and operated by a third party, is located off Athens Avenue in Lincoln, California. The Landfill opened in October of 1979 and accepts municipal solid waste (MSW). The final footprint will comprise approximately 231 acres. The site is permitted to contain a total of approximately 36.35 million tons of waste at closure. The Landfill operates under Solid Waste Facility Permit (SWFP) Number 31-AA-0210, issued by the California Integrated Waste Management Board (CIWMB).

The Landfill is a mound-over-excavation type fill. The Landfill currently consists of 16 modules for MSW placement. Module Numbers 1, 2, 10 and approximately 55 percent of Module Number 11 are identified as pre-Subtitle D, Class III, and were constructed without a geomembrane base liner. Module Number 2 has a single leachate sump and Module Numbers 10 and a portion of Module 11 have a gravel layer leachate control and recovery system (LCRS) constructed over native subgrade. The native soil subgrade was recompacted in areas where permeable soil was encountered. Module Numbers 12, and 45 percent of Module Number 11, are geomembrane-lined and have LCRSs, but are also classified as pre-Subtitle D, Class III. These modules were constructed by placing flexible member liner (FML) and a gravel LCRS layer over the native subgrade. The Module Number 13 base liner was constructed per Subtitle D requirements (FML and LCRS over two (2)-feet of compacted clay), and is also classified as Class III.

The remaining Module Numbers 14 through 16, and 5 through 9 have been redesignated as Subtitle D, Class II. The modules designated as Class II have been, or will be, constructed with a certified low permeability soil layer, a secondary geomembrane liner, and LCRS, as required. Module designation Numbers 3 and 4 have been removed from the MSW landfill design to provide area for the materials recovery facility (MRF).

The Landfill is regulated by the California Department of Resources Recycling and Recovery (CalRecycle), the Central Valley Regional Water Quality Control Board (RWQCB), Placer County Department of Health and Human Services (PCDHHS), and the Placer County Air Pollution Control District (PCAPCD). PCDHHS is the local enforcement agency (LEA) for the CalRecycle regulations. The Landfill is operated under a Title V Permit (Facility Identification WR-01) under the Federal Clean Air Act, as implemented by PCAPCD, with an expiration date of July 6, 2021.

2.2 Landfill Gas Collection and Control System

2.2.1 Existing Gas Collection and Control System

At the time of this plan, an active GCCS has been constructed and is operating at the Landfill. This section identifies both existing and proposed components of the GCCS at the Landfill. In conjunction with this plan, a GCCS design will be implemented to comply with the NSPS regulations.

The Landfill has installed and currently operates a GCCS with control devices including an enclosed flare (WPWMA flare), one (1) primary and two (2) standby landfill gas (LFG) transmission blowers, associated piping and controls. The WPWMA flare is operated under PCAPCD Permit Number PLWR-01-01. In addition, a third party LFG-to-energy (LFGTE) facility is operated on the Landfill which consists of internal combustion engines with generators and a small enclosed LFG flare for combusting excess LFG. The small enclosed flare at the LFGTE facility is operated under PCAPCD Permit Number PLWR-05-01.

The existing GCCS wellfield consists of approximately 63 vertical LFG extraction wells (interior wells), 27 perimeter wells, and 13 horizontal collectors. The existing infill (interior) LFG extraction wells are spaced between 150 and 300 feet on center and are perforated in ranges from approximately 35 feet to 85 feet below ground surface. Interior wells are typically constructed with six (6)-inch polyvinyl chloride (PVC) or high density polyethylene (HDPE) pipe and are completed with wellheads that are above the ground surface, with an approximate 36-inch bore diameter.

The perimeter wells are typically located in native soil within five (5) to 15 feet of the edge of the landfilled waste. The perimeter wells have an average well spacing of approximately 100 feet on center and are perforated in ranges from approximately 42 feet to 50 feet below ground surface, with an approximate 16-inch bore diameter. The well casings are constructed of two (2)-inch PVC pipe for the older perimeter wells with buried well heads, and four (4)-inch pipe for newer perimeter wells (GW-35 and up). The top of each casing is completed with a wellhead which is approximately one and a half feet below the ground surface and contained within a concrete vault. These perimeter wells are not considered "interior wells" and are therefore exempt from the NSPS wellhead monitoring criteria.

LFG collection piping consists of a combination of below grade and above grade PVC and HDPE pipe. Most of the currently active pipeline is above grade HDPE. The primary header pipe originates from the WPWMA flare station and consists of a 12-inch and eight (8)-inch diameter HDPE header loop that extends from the WPWMA flare station along the west and east sides of the landfill and around Module 15. Various lateral piping sections extend from the main header connecting the vertical LFG extraction wells to the GCCS. The perimeter wells are on separate six (6)-inch diameter PVC and HDPE headers connected to the primary header.

The LFG is conveyed through the pipe network to the WPWMA flare station located at the northern edge of the landfill adjacent to the northern landfill access road. From the WPWMA flare and blower station, LFG is routed to a combination of the WPWMA flare the LFGTE facility, and the small flare at the LFGTE facility.

The GCCS also includes a condensate collection and handling system composed of collection sumps, above ground condensate storage tank, transfer piping, pneumatic pumps and a compressed air system, and force mains that terminate at an existing sewer manhole near the WPWMA flare,. The condensate formed in the GCCS drains into perimeter condensate sumps with pneumatic pumps. Condensate is automatically pumped from these sumps to the sanitary sewer system.

2.2.2 Proposed Gas Collection and Control System Improvements

WPWMA has prepared a design to construct GCCS improvements both at the flare station and in the wellfield in 2016. Wellfield improvement plans include the installation of approximately 19 new vertical LFG extraction wells with associated four (4)- and six (6)-inch and eight (8) inch HDPE lateral piping. New eight (8)-inch HDPE header piping will be installed to connect the new wells to the perimeter header system. One (1) horizontal collector is also planned for installation.

Improvements for the flare station include the installation of a new blower skid and enclosed flare with associated interconnected piping. Various existing components at the flare station will either be removed or relocated for the new equipment.

Additional information and drawings of the GCCS are included in Appendix A.

3 FUTURE SITE DEVELOPMENT

3.1 GCCS Development Plan

Installation of additional GCCS components is anticipated to be coordinated with fill development and following NSPS regulations regarding installation of GCCS components stipulated in §60.752(b)(2)(ii)(A)(2). Due to any future operational changes, the GCCS design presented in Appendix A may be altered to follow the provisions of the NSPS and to accommodate actual field conditions at the time of construction.

3.2 Landfill Gas Control System Expansion Capabilities

The GCCS is designed to be readily expanded as waste fill operations proceed. Vertical or horizontal extraction wells will typically be installed in areas that have received waste for five (5) years and will be installed within two (2) years in areas that have reached final grade. However, extraction wells may be installed as a temporary control measure in disposal areas that have been in place for less than five (5) years and are not yet at final refuse grades.

Vertical extraction wells installed prior to reaching final grade will either be extended to the final grade level or abandoned and replaced. This determination will be made based upon the physical condition of the wells, their ability to provide effective LFG extraction, and field conditions at the time of final cap installation.

Proposed LFG headers are sized to accommodate the maximum expected LFG flow (refer to Section 4.5.2), and are fitted with flanged tees for expansion as new wells and piping are installed, following NSPS requirements. Additionally, the use of HDPE header piping provides for flexible and efficient connections for future expansion of the header piping system.

Additional information and drawings of the GCCS are included in Appendix A.

3.3 Interim Landfill Gas Control System Design Considerations

The purpose of this section is to address interim GCCS design following NSPS installation schedules in fill areas that are actively accepting waste, prior to achieving final fill grades.

3.3.1 Gas Collection System Expansion During Interim Conditions

NSPS requirements that specify additional LFG collection devices and the corresponding expansion of the overall GCCS will be followed. Furthermore, the expansions made to the GCCS during interim conditions will ensure that LFG will be collected at sufficient rates

that may change over the interim time frame, and will be designed and installed properly to minimize the potential for off-site subsurface LFG migration. Some of these requirements are specifically stated below:

> **§60.751** Sufficient density means any number, spacing, and combination of collection system components, including vertical wells, horizontal collectors, and surface collectors, necessary to maintain emission and migration control as determined by measures of performance set forth in this part.
>
> **§60.755(b)** For purposes of compliance with § 60.753(a), each owner or operator of a controlled landfill shall place each well or design component as specified in the approved design plan…..Each well shall be installed no later than 60 days after the date on which the initial solid waste has been in place for a period of:
>
> > **§60.755(b) (1)** 5 years or more if active; or
> >
> > **§60.755(b) (2)** 2 years or more if closed or at final grade.
>
> **§60.759(a)(2)** The sufficient density of gas collection devices determined in paragraph (a)(1) of this section shall address landfill gas migration issues and augmentation of the collection system through the use of active or passive systems at the landfill perimeter or exterior.
>
> **§60.759(a)(3)** The placement of gas collection devices determined in paragraph (a)(1) of this section shall control all gas producing areas, except as provided by paragraphs (a)(3)(i) and (a)(3)(ii) of this section.
>
> **§60.759(c)** Each owner or operator seeking to comply with §60.752(b)(2)(i)(A) shall convey the landfill gas to a control system in compliance with §60.752(b)(2)(iii) through the collection header pipe(s). The gas mover equipment shall be sized to handle the maximum gas generation flow rate expected over the intended use period of the gas moving equipment…

Following these regulations, the GCCS has been designed and will be further expanded as necessary during interim conditions, to extract LFG at a sufficient rate to minimize the potential for off-site subsurface LFG migration and surface emissions of LFG.

Per the definition stated in §60.751, "sufficient density" means "any number, spacing, and combination of collection system components necessary to maintain emission and migration control as determined by measures of performance set forth in this part." Well spacing is established based on surface emissions monitoring (SEM) results, site-specific conditions (waste age, waste density, moisture content, etc.), well radius of influence (ROI) estimates, past operational experience, and engineering judgment. This is consistent with spacing criteria used at other landfills and limits the potential for surface emissions and off-site subsurface migration of LFG.

Per the NSPS requirements, a GCCS must be installed in all areas with waste that is five (5) years or older if active; and two (2) years or more if closed or at final grade. The interim placement of wells at the site will occur in a manner per the NSPS requirements.

In the event that the actual LFG extraction rate exceeds the capacity of the system, additional GCCS components will be designed and installed following NSPS requirements as dictated by actual site conditions at the time of construction. Therefore, actual operating parameters may dictate changes in the system flow characteristics and process equipment as the GCCS is expanded.

GCCS design for the Landfill will appropriately size sufficient collection elements, LFG mover equipment, and control device(s) for the estimated maximum flow rate of LFG. Furthermore, the header and lateral systems will be sized to accommodate the peak flows depending on the planned life of the pipe. If the Landfill plans to operate the header/lateral only during interim conditions, and then dismantle/replace prior to final build out of the GCCS, then it will be sized for the anticipated LFG flows equating to the period of time it is planned to be operational. The portions of the pipe network that the Landfill plans to use as part of the final design will be appropriately sized to handle the anticipated LFG flows in the portion of the Landfill at final build-out.

3.3.2 Compatibility with Refuse Filling Operations

One of the key factors in constructing and operating a GCCS during interim conditions, is to design and install the collectors to be compatible with the refuse filling operations of an active landfill. As refuse filling operations proceed and portions of the site reach final or near final grades, additional GCCS components may be installed to follow the five (5)-year/two (2)-year requirements of NSPS. Using this method allows GCCS components to be installed following §60.752(b)(2)(ii)(A)(2)(i) and (ii) while minimizing interference of the GCCS with ongoing filling operations.

During the process of refuse filling operations, periodically, vertical LFG extraction wells may be "raised" so the new refuse is not placed over the top of an existing well in a manner that covers the wellhead with refuse, thereby preventing access to the well. Vertical LFG extraction wells are raised in anticipation of a new lift of refuse, or in advance of the refuse being added to the area in order to maintain worker safety in the active area during these well raising construction activities. A variance request for monitoring these raised wells is contained in Appendix B of this Plan.

4 COMPLIANCE REVIEW AND EVALUATION

4.1 Compliance with §60.759(a)(1)

> **§60.759(a)(1)** The collection devices within the interior and along the perimeter areas shall be certified to achieve comprehensive control of surface gas emissions by a professional engineer. The following issues shall be addressed in the design: depths of refuse, refuse gas generation rates and flow characteristics, cover properties, gas system expandability, leachate and condensate management, accessibility, compatibility with filling operations, integration with closure end use, air intrusion control, corrosion resistance, fill settlement, and resistance to the refuse decomposition heat.

The Landfill's GCCS has been designed to be consistent with NSPS requirements to achieve comprehensive control of both potential for off-site subsurface LFG migration and surface emissions of LFG. The GCCS is an existing system which is continued to be expanded upon to comply with NSPS regulations. Additional information on the compliance of the GCCS with 60.759(a)(1) is presented in the sections below.

Applicable information used in the design of the GCCS is included in Appendix A (GCCS Design Drawings), Appendix B (Alternatives to the NSPS), Appendix C (Landfill Gas Generation Rate Modeling), and Appendix D (Surface Emissions Monitoring Plan).

4.1.1 Control Surface Emissions

The GCCS was designed to minimize the potential for both off-site subsurface LFG migration and surface emissions of LFG from the Landfill. System performance depends upon the installation of a satisfactory GCCS system, its proper management, and maintenance of a suitable final refuse cover. If there is a temporary exceedance in emissions it will be addressed by appropriate response, evaluating both the GCCS and final cover systems. Appropriate action will then be taken to correct the exceedance as required by NSPS.

4.1.2 Depths of Refuse

Depths of refuse were calculated, at the time of the design of the GCCS, based upon existing topography, permit plan, and record documentation of landfill liner or bottom elevations. The landfill surface elevation was determined from aerial and/or ground survey data available at the time of the design.

4.1.3 Landfill Gas Generation Rates and Flow Characteristics

In compliance with §60.752(b)(2)(ii)(A), the maximum expected LFG generation rate was estimated as 4,060 standard cubic feet per minute (scfm) in the year 2056 based on LFG generation modeling done in 2015 utilizing the United States Environmental Protection Agency (USEPA) Landfill Gas Emissions Mode, Version 3.02. In accordance with §60.755 (a)(1)(iii), following the installation of the initial GCCS, actual flow data has been used to project the maximum expected LFG generation flow rate instead of, or in conjunction with, the equations in paragraphs (a)(1)(i) and (ii) of this regulation.

As specified in 40 CFR 60.759(c)(1), the LFG mover equipment has been sized to handle the maximum LFG generation rate expected over the intended use period of the LFG moving equipment. Additional control device capacity will be installed if warranted in accordance with the NSPS.

LFG generation projections are provided in Appendix C.

4.1.4 Landfill Cover Properties

Modules 1, 2, and the eastern side slope and top deck portions of Modules 10 and 11 are closed. The final cover system for the closed portion of these modules consists of two (2) feet of foundation soils, one (1) foot of clay, and one (1) foot of vegetative support layer. The western portions of Modules 10 and 11 have interim cover consisting of onsite soils.

The final cover for active and future modules is prescribed in the Waste Discharge Requirements but not fully designed. It will likely consist of a low permeable soil layer, geomembrane, or other approved final cover system in accordance with California Code of Regulations (CCR) Title 27 regulations. The primary purpose of the final cover system is to preclude precipitation infiltration that would generate additional leachate. However, the final cover system design also provides a significant barrier to LFG emissions and air infiltration when combined with an active LFG extraction system. The GCCS will provide components for collecting LFG from beneath the final cover system.

4.1.5 Landfill Gas Control System Expandability

Expandability of the GCCS is achieved by installing tees with blind flanges along the transmission piping within the wellfield and at the control facility(s). These flanges provide planned access for expansion of the LFG transmission piping and LFG control devices in the future. In the event that actual LFG flow rates do exceed the capacity of the system, additional GCCS components will be designed and installed in accordance with NSPS requirements.

4.1.6 Condensate Management

Pipelines and wells will be designed to manage condensate and leachate intrusion. This may require the use of in-well condensate/leachate pumping facilities, routing liquid flow into the leachate collection and recovery system (LCRS), temporary pumping of wells if feasible, or abandonment and replacement of wells whose flow rates are insufficient due to condensate/leachate inundation. Whenever feasible, wells will be designed to drain into the LCRS. Wells installed in new waste or active filling areas may need to be larger diameter (i.e. 8" or more) to accommodate in-well pumping systems while, based on site experience, allowing for greater bending of the well casing as it is extended or affected by the waste load around it. Condensate collected in perimeter sumps at low points along the LFG header system is pumped to the WPWMA flare station area by pneumatic pumps. The pumps' discharge is connected to an HDPE force main which discharges condensate to the sanitary sewer system immediately north of the WPWMA flare station.

4.1.7 Accessibility

Accessibility to the GCCS components is achieved by installing commonly accessed components (such as wellheads and monitoring ports) on relatively flat surfaces of the Landfill or near the Landfill's road network. Wellheads, piping risers, valves and monitoring ports will be installed above grade to maintain accessibility and will include valve handle extensions should piping and valves be buried in the future to accommodate fill operations.

4.1.8 Compatibility with Refuse Filling Operations

At the time of this report, an active GCCS has been constructed and is operating at the Landfill. Future additions or expansions of the GCCS will be considered when planning waste filling operations and will be designed to integrate the existing GCCS, to the extent practical.

As refuse filling operations proceed and portions of the site reach final or near-final grades, additional GCCS components will be installed. This method of installation allows GCCS components to be constructed in accordance §60.752(b)(2)(ii)(A)(2)(i) and (ii) while minimizing interference of the GCCS with ongoing filling operations.

4.1.9 Integration with Closure End Use

Currently, the post-closure end-use for the site is unspecified. Future closure end-use must be approved by Landfill personnel to evaluate compatibility with the GCCS. Any items of concern related to maintaining and operating the GCCS will be mitigated by either altering the proposed post-closure end-use or by adjusting or modifying the GCCS in accordance with Landfill and NSPS requirements.

4.1.10 Air Intrusion Control

Potential air intrusion and LFG emissions through the cover system will be controlled through adequate cover system design, cover system pipe penetration design, periodic monitoring and adjustment of the GCCS, and appropriate maintenance of the landfill cover system.

Air intrusion around LFG wells will be minimized by placing a bentonite seal above the screened (perforated) portion of the well and at the landfill surface surrounding the well casing. Pipe boots may also be used to further decrease the likelihood for air intrusion at points where pipes penetrate the cover system. Air intrusion in horizontal collectors will be accomplished by burying horizontal collection trenches under subsequent lifts of refuse and by offsetting the start of perforated piping from side slopes. Based on site experience with pipes breaking in the shallow cover soil, only resilient pipes (i.e. not PVC) will be allowed to extend through the cover system.

Furthermore, air intrusion will be controlled through periodic monitoring for nitrogen or oxygen at each wellhead and conducting adjustments to the GCCS in accordance with the NSPS requirements.

4.1.11 Corrosion Resistance

Corrosion resistance of the GCCS is achieved through the use of corrosion resistant materials or materials that have a corrosion resistant coating, in accordance with 40 CFR §60.759(b)(1). The GCCS components will be constructed of PVC, HDPE, fiberglass, corrosion-resistant steel, neoprene (gaskets and seals) and other non-porous corrosion resistant materials.

Components will be inspected during routine GCCS monitoring for abrasion, chipping, or other potential deterioration of the components. If damage to the materials is observed that may be detrimental to the performance of the GCCS, the components will be replaced or repaired.

4.1.12 Fill Settlement

Settlement will occur due to decomposition and consolidation of the refuse. To accommodate refuse settlement, the GCCS components were designed and installed with several features to account for this settlement including:

- LFG extraction wellheads connected to the LFG transmission piping by a flexible pipe or hose connection. This allows the LFG piping to accommodate some changes in the orientation of the LFG transmission piping or LFG extraction well;

- HDPE piping will be used for the construction of the header piping and transmission system. HDPE piping is flexible and absorbs differential settlement without breaking or cracking; and

- LFG transmission piping will be sloped at sufficient grades so that reasonable amounts of differential and total settlement may occur without causing pipe breakage, or disrupting the overall flow gradient of the LFG transmission piping, with the following minimum slopes unless infeasible;
  - Above ground pipe within the limit of landfilled waste, with LFG flow in same direction as condensate flow – approximately 2%
  - Above ground pipe within the limit of landfilled waste, with LFG flow against the condensate flow direction – approximately 3%
  - Buried pipe within the limit of landfilled waste (seldom used) – approximately 4%
  - Buried pipe within the limit of landfilled waste in actively filling or road crossing areas (seldom used) – approximately 6%
  - Buried pipe outside the limit of landfilled waste in engineered fill or undisturbed soil (seldom used) – approximately 1%

4.1.13 Resistance to Decomposition Heat

Resistance of the GCCS to the heat generated as a result of refuse decomposition is achieved through the use of materials tested and proven to withstand temperatures well above those typically found in landfills. The GCCS will be inspected during routine LFG system monitoring for heat damage. If heat damage of the GCCS components is observed and is believed to be detrimental to the operation of the GCCS, the cause of the elevated landfill temperature will be investigated and the GCCS will be adjusted or modified to mitigate the effects of the elevated temperatures.

The primary point of observation during routine LFG system monitoring will be at the individual wellheads. Each wellhead will possess either an integral thermometer or a connection for the use of portable thermometer. The extraction wells will generally be operated at temperatures of less than 131 degrees Fahrenheit (°F), unless an alternative temperature parameter is approved for an individual monitoring point.

Wellhead components are visually inspected and the control valve and monitoring connection physically exercised during each monitoring event, to ensure correct operation of the components.

4.1.14 Restraint of Pipe in Temperature Fluctuations and UV Protection

Resistance of the GCCS pipeline components to heat generated expansion and contraction is achieved through the use of earth berms, concrete anchors and other materials designed to restrain the pipe, combined with areas designed to allow for pipe expansion. The areas for pipe expansion may include flexible restraint systems (concrete ties with straps oriented perpendicular to the passing pipeline) or flattened areas of land to allow for pipe movement without creating a sag.

UV protection is a concern for the PVC pipelines and PVC based flexible hoses used at each well head. Permanent PVC pipe may be coated with a protective coating of paint. Future permanent piping will be constructed of HDPE instead of PVC.

The GCCS will be inspected during routine LFG system monitoring for UV, heat or expansion/contraction damage, excessive abrasion, collapse or excessive sagging. If damage is observed and is believed to be detrimental to the reliable operation of the GCCS, the cause will be investigated and the GCCS components will be adjusted, modified or replaced to mitigate the effects of the temperature fluctuations.

4.2 Compliance with §60.759(a)(2)

> **§60.759(a)(2)** The sufficient density of gas collection devices determined in paragraph (a)(1) of this section shall address landfill gas migration issues and augmentation of the collection system through the use of active or passive systems at the landfill perimeter or exterior.

Per the definition stated in §60.751, "sufficient density" means "any number, spacing, and combination of collection system components. . . necessary to maintain emission and migration control as determined by measures of performance set forth in this part."

The GCCS consists of vertical wells installed within the waste footprint and just outside the waste footprint, and horizontal collection wells buried within the waste mass. The adequacy of the well density will be confirmed with SEM. Quarterly SEM will be performed using a flame ionization detector (FID), as required under §60.754(c)(3). All exceedances will be properly mitigated and re-tested in accordance with the NSPS. Monitoring of perimeter LFG probes is also conducted and will help determine the GCCS effectiveness to control potential for off-site subsurface LFG migration. All findings are submitted to the facility's operating record.

If the GCCS does not meet the measures of performance set forth in the NSPS, the GCCS will be adjusted or modified in accordance with the NSPS requirements. These adjustments or modifications may include the installation of additional LFG collection elements, cap repairs or other actions defined by field conditions at the time of monitoring.

4.3 Compliance with §60.759(a)(3)

> **§60.759(a)(3)** The placement of gas collection devices determined in paragraph (a)(1) of this section shall control all gas producing areas, except as provided by paragraphs (a)(3)(i) and (a)(3)(ii) of this section.

Compliance related to §60.759(a)(3) are discussed in the following sections.

4.3.1 Asbestos and Non-degradable Materials

> **§60.759(a)(3)(i)** Any segregated area of asbestos or non-degradable material may be excluded from collection if documented as provided under §60.758(d). The documentation shall provide the nature, date of deposition, location and amount of asbestos or non-degradable material deposited in the area, and shall be provided to the Administrator upon request.

The Landfill was previously permitted to accept asbestos but currently does not.

4.3.2 Nonproductive Areas

> **§60.759(a)(3)(ii)** Any nonproductive area of the landfill may be excluded from control, provided that the total of all excluded areas can be shown to contribute less than 1 percent of the total amount of NMOC emissions from the landfill. The amount, location, and age of the material shall be documented and provided to the Administrator upon request. A separate NMOC emissions estimate shall be made for each section proposed for exclusion, and the sum of all such sections shall be compared to the NMOC emissions estimate for the entire landfill.

There are currently no non-productive areas at the Landfill.

4.4 Compliance with §60.759(b)(1), (2), and (3)

> **§60.759(b)** Each owner or operator seeking to comply with §60.752(b)(2)(i)(A) shall construct the gas collection devices using the following equipment or procedures:

4.4.1 Landfill Gas Extraction Component Construction

> **§60.759(b)(1)** The landfill gas extraction components shall be constructed of PVC, HDPE pipe, fiberglass, stainless steel, or other non-porous corrosion resistant material of suitable dimensions to: convey projected amounts of gases; withstand installation, static, and settlement forces; and withstand planned overburden or traffic loads. The collection system shall extend as necessary to comply with

> emission and migration standards. Collection devices such as wells and horizontal collectors shall be perforated to allow gas entry without head loss sufficient to impair performance across the intended extent of control. Perforations shall be situated with regard to the need to prevent excessive air infiltration

Compliance with §60.759(b)(1) is discussed in the following sections.

4.4.1.1 Materials

The GCCS components will be constructed of PVC, HDPE, fiberglass, corrosion-resistant steel, neoprene (gaskets and seals) and other non-porous corrosion resistant materials. Pipelines that penetrate the landfill cover will only be constructed of resilient materials such as HDPE, not of PVC due to site experience with PVC breakage.

4.4.1.2 Component Sizing

The piping network, blowers, and flare are sized for the current anticipated LFG flow rates for the facility. The GCCS is installed with expansion capabilities and the capacity of the extraction and treatment system components may be phased in as LFG generation and extraction rates increase.

4.4.1.3 Component Loading

The GCCS components were designed to withstand the estimated installation, static, settlement, overburden, and traffic loads. The GCCS components that will be installed at the Landfill are consistent with those at other landfills which have been in-place for extended periods of time (in excess of 15 years) and verified to be withstanding applied static and settlement forces. Overburden and traffic loads for the proposed LFG transmission piping are less than the allowable loads recommended by the piping manufacturer. Foundations used for GCCS components were designed to handle the applied loads.

4.4.1.4 System Expansion

The GCCS shall be expanded as necessary to comply with NSPS requirements. Expansion of the GCCS will be certified by a professional engineer and the measures of performance of the LFG system verified as set forth in the NSPS. The Landfill will continue to conduct monitoring and document compliance of the GCCS in accordance with NSPS requirements. If the GCCS at the Landfill does not meet the measures of performance set forth in the NSPS, the GCCS will be adjusted or modified in accordance with NSPS requirements.

4.4.1.5 Component Perforation

The vertical well elements will be perforated similar to those shown on the design drawings (Appendix A), or as approved by the design engineer at the time of installation, to allow LFG entry without inducing head losses sufficient to impair performance across the intended extent of control. The perforation patterns used for the GCCS design have been successfully used in previous LFG control applications.

4.4.1.6 Air Infiltration

The LFG collection elements were designed to prevent excessive air infiltration through the use of solid pipe and solid backfill near the ground surface for vertical extraction wells. Hydrated bentonite clay chips, and/or geomembrane seals will be provided around the vertical extraction well casings where they penetrate the landfill final cover systems. Further, air intrusion control will be accomplished through monitoring of the operational monitoring standards for the LFG collection elements in accordance with NSPS requirements. If the GCCS does not meet the operational monitoring standards, it will be adjusted or modified in accordance with NSPS requirements.

4.4.2 Landfill Gas Extraction Component Installation

> **§60.759(b)(2)** Vertical wells shall be placed so as not to endanger underlying liners and shall address the occurrence of water within the landfill. Holes and trenches constructed for piped wells and horizontal collectors shall be of sufficient cross-section so as to allow for their proper construction and completion including, for example, centering of pipes and placement of gravel backfill. Collection devices shall be designed so as not to allow indirect short circuiting of air into the cover or refuse into the collection system or gas into the air. Any gravel used around pipe perforations should be of a dimension so as not to penetrate or block perforations.

Compliance with §60.759(b)(2) is discussed in the following sections.

4.4.2.1 Component Placement

Depths of refuse were calculated, at the time of the design of the GCCS, based upon existing topography and permit plan and record documentation of Landfill liner grades. The Landfill surface elevations are determined from aerial survey data at the time of design.

4.4.2.2 Leachate

The occurrence of leachate within the Landfill is addressed by the leachate management system. Leachate management is accomplished through the use of a leachate drainage

layer, perforated collection piping, liquid pumping and discharge to the sanitary sewer system.

For this reason, it is not expected that free liquids will be encountered during the drilling of the vertical extraction wells. If free liquids are encountered, the drilling contractor will attempt to drill through the perched zone of liquids allowing drainage into the underlying waste mass and the leachate collection system. In the event that the zone of perched liquids cannot be penetrated, the well installation may be terminated and relocated. If necessary, appropriate measures will be taken to complete the well installation procedure at a nearby location.

If perched liquids are observed within the vertical extraction wells after installation and it is determined that the liquid level is restrictive to efficient LFG extraction, the leachate level will be reduced. This is typically accomplished by periodic pumping of the liquids using either electric or pneumatic pumping systems. Liquids removed from the well casings will be discharged to the sanitary sewer system in accordance with applicable permits.

4.4.2.3 Vertical Wells

Vertical extraction wells constructed for LFG collection are of sufficient cross-section to allow for their proper construction and completion, including centering of the pipes and placement of gravel backfill. The vertical wells will be constructed under supervision of a construction quality assurance program implemented by the Landfill and verified to be properly constructed.

4.4.2.4 Horizontal Wells

Horizontal LFG collection wells are also used to control LFG emissions and are typically buried in 50 to 100 feet of waste as waste lifts are constructed vertically. Horizontal LFG collection trenches are installed across active areas and tied into adjacent GCCS piping with solid pipe or risers. Due to the propensity for air intrusion since the horizontal trenches are normally completed in shallow trenches across new waste, the horizontal wells are typically operated after placement of at least one to two subsequent lifts of refuse. In addition, the perforated piping portion of the horizontal collectors are normally offset from side slopes to prevent air intrusion from the side slope.

4.4.2.5 Component Short Circuiting

Air intrusion control will be verified through monitoring of LFG quality at the extraction components, monitoring of surface emission levels and maintenance of the landfill cover in accordance with NSPS requirements. Separation of the collection elements from the refuse is accomplished by placing gravel backfill in the annular borehole space around extraction well casings, providing a filter pack between the refuse and the LFG collection elements.

The potential for direct venting of the LFG to the atmosphere is limited by operating the GCCS under a controlled application of vacuum and is monitored by quarterly monitoring of surface emissions (see Section 4.2).

4.4.2.6 Gravel Backfill

Gravel of sufficient size is specified to prevent penetration or blockages of the LFG collector pipe perforations. Gravel (non-calcareous) to be utilized will be typically nominal one-inch to three-inch particle size.

4.4.3 Landfill Gas Extraction Component Connections to LFG Transmission Piping

> **§60.759(b)(3)** Collection devices may be connected to the collection header pipes below or above the landfill surface. The connector assembly shall include a positive closing throttle valve, any necessary seals and couplings, access couplings and at least one sampling port. The collection devices shall be constructed of PVC, HDPE, fiberglass, stainless steel, or other non-porous material of suitable thickness.

The collection devices are connected to the collection header pipes using lateral piping. The lateral piping is connected to the header piping either above or below the landfill surface, as required by field conditions at the time of installation. The connector assemblies (vertical extraction wellheads) are located above grade. These assemblies include a positive closing throttle valve, necessary seals and couplings, access ports and couplings, and a minimum of two sampling ports. The collection devices are constructed of PVC, HDPE, fiberglass, corrosion-resistant steel, and other non-porous materials of suitable thickness. The GCCS components are designed to withstand anticipated installation, static, settlement, overburden, and traffic loads.

4.5 Compliance with §60.759(c)(1) or (2)

> **§60.759(c)** Each owner or operator seeking to comply with §60.752(b)(2)(i)(A) shall convey the landfill gas to a control system in compliance with §60.752(b)(2)(iii) through the collection header pipe(s). The gas mover equipment shall be sized to handle the maximum gas generation flow rate expected over the intended use period of the gas moving equipment using the following procedures:

Compliance with §60.759(c) is discussed in the following sections.

4.5.1 Existing Landfill Gas Flow Rate Data

> **§60.759(c)(1)** For existing collection systems, the flow data shall be used to project the maximum flow rate. If no flow data exists, the procedures in paragraph (c)(2) of this section shall be used.

At the time of this report, an active GCCS has been constructed and is operating at the Landfill. The LFG mover equipment has been sized to handle the LFG flow rate expected over the intended use period of the LFG moving equipment.

LFG generation projections are provided in Appendix C.

4.5.2 Future Landfill Gas Flow Rate Estimates

> **§60.759(c)(2)** For new collection systems, the maximum flow rate shall be in accordance with §60.755(a)(1).

In compliance with §60.752(b)(2)(ii)(A), the maximum expected LFG flow rate for the GCCS is based on LFG modeling and site specific LFG flow data. As specified in 40 CFR 60.759(c)(1), the LFG mover equipment has been sized to handle the maximum LFG generation rate expected over the intended use period of the LFG moving equipment. Additional control device capacity will be installed if warranted in accordance with the NSPS.

LFG generation projections are provided in Appendix C.

4.6 Alternatives and Compliance with §60.752(b)(2)

> **§60.752(b)(2)** If the calculated NMOC emission rate is equal to or greater than 50 megagrams per year, the owner or operator shall:

4.6.1 Submit a Design Plan

> **§60.752(b)(2)(i)** Submit a collection and control system design plan prepared by a professional engineer to the Administrator within 1 year:

A Tier 1 analysis conducted in 1997 indicated the Landfill exceeded the 50 megagrams per year (Mg/yr) threshold. A Design Plan was prepared in 1998 within one year of the Tier 1 analysis which indicated the Landfill exceeded 50 Mg/yr of NMOCs.

On behalf of WPWMA, Cornerstone prepared this GCCS Design Plan to update and replace the most recent version of the GCCS Design Plan. WPWMA is submitting this Design Plan update to the PCAPCD, with a copy sent to the USEPA Region IX office consistent with NSPS requirements. Refer to Table 2 for further details.

4.6.2 Alternatives to the NSPS

> **§60.752(b)(2)(i)(B)** The collection and control system design plan shall include any alternatives to the operational standards, test methods, procedures, compliance

measures, monitoring, record keeping or reporting provisions of §60.753 through §60.758 proposed by the owner or operator.

A number of alternatives to the operational standards, test methods, procedures, compliance measures, monitoring, record keeping or reporting provisions of §60.753 through §60.758 of the NSPS are proposed at this time. These alternatives are discussed in Appendix B of this document.

4.6.3 Specifications for Active Collection Systems

As stated in Sections 4.1 through 4.5 of this Design Plan, the GCCS proposed at the Landfill complies with the specifications for active collection systems as stipulated in §60.759 of the NSPS. If future expansions of the GCCS are necessary, they will be designed to comply with the NSPS requirements or any approved alternatives**.**

4.6.4 Installation of Landfill Gas Collection and Control System

§60.752(b)(2)(ii) Install a collection and control system within 18 months of the submittal of the design plan under paragraph (b)(2)(i) of this section that effectively captures the gas generated within the landfill.

§60.752(b)(2)(ii)(A)(2) Collect gas from each area, cell, or group of cells in the landfill in which the initial solid waste has been placed for a period of:

§60.752(b)(2)(ii)(A)(2)(i) 5 years or more if active; or

§60.752(b)(2)(ii)(A)(2)(ii) 2 years or more if closed or at final grade;

Refer to Table 2 for further details regarding §60.752(b)(2)(ii). Future expansions to the GCCS will proceed in accordance with the schedules under paragraphs (i) and (ii) of this section.

§60.752(b)(2)(ii)(A)(3) Collect gas at a sufficient extraction rate;

§60.752(b)(2)(ii)(A)(4) Be designed to minimize off-site migration of gas.

In compliance with §60.752(b)(2)(ii)(A)(3) and (4), the GCCS is designed to extract LFG at a sufficient rate to minimize the potential for off-site subsurface LFG migration and surface emissions of LFG. This is achieved by sizing and installing sufficient collection elements, transmission piping, blower(s), and flare for the estimated maximum flow rate of LFG.

The GCCS is designed to collect LFG at a sufficient rate, which per the definition in §60.751 means to maintain a negative [gage] pressure (vacuum) at the wellheads without causing air infiltration. Application of a negative gage pressure and minimization of air infiltration will be verified by monitoring the static pressure and nitrogen or oxygen concentrations of the LFG at the extraction points.

Each extraction point will be monitored on a minimum of a monthly basis in accordance with 40 CFR §60.753 (b) and (c). Monitoring will be performed for pressure, temperature, oxygen and/or nitrogen, at a minimum.

Verification of the GCCS's ability to minimize the potential for off-site subsurface LFG migration will be achieved through the routine monitoring of perimeter LFG monitoring probes installed around the Landfill.

The Landfill will monitor the GCCS extraction points, after installation, for static pressure and for LFG quality in accordance with NSPS requirements and will continue to monitor the perimeter LFG monitoring locations to detect potential for off-site subsurface LFG migration. If off-site LFG migration is detected, the Landfill will take the necessary actions in accordance with NSPS requirements.

4.6.5 Control Systems

> **§60.752(b)(2)(iii)** Route all the collected gas to a control system that complies with the requirements in either paragraph (b)(2)(iii)(A), (B) or (C) of this section.

The control systems have the ability to utilize the LFG collected as part of the GCCS. The required operational performance of these components is stipulated by §60.752(b)(2)(iii) which states:

> **§60.752(b)(2)(iii)(A)** An open flare designed and operated in accordance with §60.1
>
> **§60.752(b)(2)(iii)(B)** A control system designed and operated to reduce NMOC by 98 weight-percent, or, when an enclosed combustion device is used for control, to either reduce NMOC by 98 weight percent or reduce the outlet NMOC concentration to less than 20 parts per million by volume, dry basis as hexane at 3 percent oxygen. The reduction efficiency or parts per million by volume shall be established by an initial performance test, required under §60.8 using the test methods specified in §60.754(d).
>
> **§60.752(b)(2)(iii)(C)** Route all collected gas to a treatment system that processes the collected gas for subsequent sale or use. All emissions from any atmospheric vent from the gas treatment system shall be subject to the requirements of paragraph (b)(2)(iii)(A) or (B) of this section.

LFG collected at the Landfill is routed to a 75.9 Million British Thermal Units per hour (MMBTU/hr) (2,500 scfm at 55 percent methane) capacity enclosed flare with a destruction efficiency of at least 98 percent. A new proposed 90 MMBTU/hr (3,000 scfm at 50 percent methane) capacity enclosed flare with a destruction efficiency of at least 99 percent is to be installed at the site in 2016.

The flare operating temperature and LFG flow rate is monitored and recorded a minimum of every 15 minutes with a paperless recorder in accordance with §60.756(b). The flare exhaust temperature is monitored using thermocouples installed within the flare stack. The LFG flow rate is measured by a continuous flow metering device installed along the LFG piping, downstream of the blowers. There are no bypass valves or other conveyances that will allow untreated LFG to be discharged to the atmosphere.

The flare is monitored for the presence of a flame, indicating that combustion is occurring. Monitoring for the presence of a flame is accomplished by an ultraviolet (UV) flame scanner, thermocouple, or comparable device. In the event that a flame is not detected, indicating that the combustion process has been disrupted, the monitoring system will automatically:

a) Eliminate power to the LFG blowers; and

b) Initiate the closure of a pneumatic-activated valve at the inlet to the flare (there is no bypass around the control device).

Stopping the blowers will cause the LFG extraction process to cease. Closing the inlet valve to the flare will eliminate the potential for direct venting of LFG through the control device system.

A small enclosed flare at the LFGTE facility is operated under PCAPCD Permit Number PLWR-05-01. The small flare has a capacity of 13.9 MMBTU/hr (450 scfm at 55 percent methane) and is not permitted to operate at the same time as the large flare, except for a one (1)-hour transition time when switching from operation of one flare to the other. The small flare has a destruction efficiency of at least 98 percent, and is equipped with an alarm and automatic blower and LFG supply shutoff valve system to isolate the flare from the landfill gas supply line in the event of a failure.

A portion of the LFG from the Landfill is processed by the LFGTE facility. The LFGTE facility is capable of processing the maximum flow of LFG from the landfill, around 3,300 scfm. LFG that is not utilized by the power plant is routed to the WPWMA flare or small flare control devices.

In the event that LFG extracted from the landfill exceeds the capacity of the control systems, additional control mechanisms will be installed. These additional control mechanisms may include, but are not limited to, installing additional or upgraded control devices or installation of beneficial-use facilities.

LIMITATIONS

The work product included in the attached was undertaken in full conformity with generally accepted professional consulting principles and practices and to the fullest extent as allowed by law we expressly disclaim all warranties, express or implied, including warranties of merchantability or fitness for a particular purpose. The work product was completed in full conformity with the contract with our client and this document is solely for the use and reliance of our client (unless previously agreed upon that a third party could rely on the work product) and any reliance on this work product by an unapproved outside party is at such party's risk.

The work product herein (including opinions, conclusions, suggestions, etc.) was prepared based on the situations and circumstances as found at the time, location, scope and goal of our performance and thus should be relied upon and used by our client recognizing these considerations and limitations. Cornerstone shall not be liable for the consequences of any change in environmental standards, practices, or regulations following the completion of our work and there is no warrant to the veracity of information provided by third parties, or the partial utilization of this work product.

The modeling techniques used by Cornerstone and the LFG industry are, by definition, hypothetical, and can only be used as a very general tool for producing a range of estimates to aid in determining the direction of further investigations. Actual LFG generation and collection rates are dependent on many variables, including: refuse composition, moisture, pH, cover soil permeability, well spacing, continuing fill rates, etc. Typically these parameters are not well defined at the time of modeling and/or differ somewhat from those actually experienced during future site operation.

The modeling provided herein was performed with today's current standards of practice and no warranty or representation, expressed or implied, is made, as to the actual LFG production that will occur in the future. Opinions and recommendations contained in this report are based on the information available and certain assumptions that were deemed reasonable when our services were performed. We are not responsible for the impacts of any changes in information, site operations or methods that may change in the future.

TABLES

TABLE 1 – SUMMARY OF LANDFILL GAS COLLECTION AND CONTROL SYSTEM DESIGN PLAN

Regulatory Citation	Report Reference	Appendix E Reference[1]	Regulatory Requirement	Implementation of Regulatory Requirement
60.759 (a)(1)	Section 4.1	Page E-3, Section 3	Design Plan must address depth of refuse, refuse LFG generation rates and flow characteristics, cover properties, LFG system expandability, leachate and condensate management, accessibility, compatibility with filling operations, integration with closure end-use, air intrusion control, corrosion resistance, fill settlement, resistance to the refuse decomposition heat.	The Landfill Design Plan addresses all of the requirements listed under §60.759 (a)(1).
§60.759 (a)(2)	Section 4.2	Page E-3, Section 4	LFG collection devices shall be installed at a sufficient density to control surface emissions and subsurface migration of LFG.	The LFG collection devices have been designed to control surface emissions and subsurface migration of LFG.
§60.759 (a)(3)(i)	Section 4.3.1	Page E-3, Section 5	Areas containing asbestos or other non-degradable materials may be excluded from coverage by the LFG collection and control system (GCCS).	The Landfill does not accept asbestos.
§60.759 (a)(3)(ii)	Section 4.3.2	Page E-3, Section 6	Areas considered to be non-productive (contributing less than one percent of the total non-methane organic compounds (NMOC) from the landfill) may be excluded from coverage of the landfill GCCS.	There are currently no non-productive areas at the Landfill.
§60.759 (b)(1)	Section 4.4.1	Page E-5, Section 7	Landfill GCCS components shall be constructed of PVC, HDPE or other non-porous corrosion resistant materials.	Landfill GCCS components shall be constructed of PVC, HDPE or other non-porous corrosion resistant materials.

Regulatory Citation	Report Reference	Appendix E Reference[1]	Regulatory Requirement	Implementation of Regulatory Requirement
	Section 4.4.1	Page E-5, Section 8	Landfill GCCS components shall have suitable dimensions to convey the maximum LFG flow rate and withstand future settlement, overburden and traffic loads.	Landfill GCCS components were designed to accommodate the maximum LFG flow rate and withstand future settlement, overburden and traffic loads.
	Section 4.4.1	Page E-5, Section 9	Expansion of the landfill GCCS will occur as needed to meet LFG emissions and migration standards.	Expansion of the landfill GCCS will occur as needed following LFG emissions and migration standards.
	Section 4.4.1	Page E-5, Section 10	Extraction well perforations will control head loss and air infiltration throughout the system,	The LFG collection elements shall be constructed to minimize head loss and prevent excessive air infiltration into the system.
§60.759 (b)(2)	Section 4.4.2	Page E-5, Section 11	Extraction wells must not endanger the landfill base liner and must address the occurrence of water in the landfill.	The extraction wells are designed based on depths of refuse which are calculated at the time of the design of the GCCS based upon existing topography and permit plan and record documentation of Landfill liner grades. The Landfill surface elevations are determined from survey data at the time of design. Liquids in the refuse are addressed by the leachate and condensate management systems.
	Section 4.4.2	Page E-6, Section 12	Suitable cross-section of the well holes and trenches is required for construction and completion of the collection elements.	The vertical boreholes will be constructed with sufficient cross section to allow for the proper construction of the collection elements.

Regulatory Citation	Report Reference	Appendix E Reference[1]	Regulatory Requirement	Implementation of Regulatory Requirement
	Section 4.4.2	Page E-6, Section 13	Landfill GCCS components must be designed to control air intrusion, prevent LFG from escaping the GCCS, and prohibit refuse from entering the GCCS.	Control of air intrusion and the escape of LFG from the system will be accomplished through the monitoring of the landfill GCCS, operating the system under vacuum and continued maintenance of the landfill cover. The refuse is prohibited from entering the collection devices by gravel backfill or other approved materials placed in the hole or trench separating the refuse from the LFG collection elements.
	Section 4.4.2	Page E-6, Section 14	Gravel backfill in the extraction wells and trenches shall not obstruct pipe perforations.	Backfill of sufficient size will be used to prohibit entry or blockage of the collector perforations.
§60.759 (b)(3)	Section 4.4.3	Page E-6, Section 15	Collection device connections may be above or below ground, must include a positive closing throttling valve, necessary seals, access couplings, and at least one monitoring point.	The collection devices shall be connected to the collection header pipe and will include a positive closing throttling valve, necessary seals, access couplings, and at least one monitoring point.
§60.759 (c)	Section 4.5	Page E-6, Section 16	The collection header pipes must be adequate to handle the maximum LFG flow rate.	The collection header pipes are adequate to handle the current maximum LFG flow rate.
§60.752 (b)(2)(i)	Section 4.6.1	Page E-3, Section 2	Submit a collection and control system design plan prepared by a professional engineer to the Administrator within 1 year. Landfill GCCS Design Plan must be certified, sealed and signed by a professional engineer.	The GCCS Design Plan has been certified, sealed and signed by a professional engineer. See Table 2, below, for further details.

Regulatory Citation	Report Reference	Appendix E Reference[1]	Regulatory Requirement	Implementation of Regulatory Requirement
§60.752 (b)(2)(i)(B)	Section 4.6.2		The GCCS Design Plan shall include any alternatives to the operational standards, test methods, procedures, compliance measures, monitoring, record keeping or reporting provisions of §60.753 through §60.758 proposed by the owner or operator.	The GCCS Design Plan includes alternatives per the requirements by the owner or operator in Appendix B.
§60.752 (b)(2)(ii)(A)(2)	Section 4.6.4	Page E-2, Section 2	LFG collection shall occur in active cells with waste in place for five years or more; in closed cells with waste at final grade for two years or more.	The landfill GCCS components will be installed following NSPS schedule requirements.
§60.752 (b)(2)(ii)(A)(3)	Section 4.6.4	Page E-2, Section 3	LFG extraction wells shall apply a negative gage pressure to maintain a sufficient extraction rate of LFG without causing air infiltration.	A negative gage pressure shall be applied to the LFG collection elements via a blower. The Landfill will monitor the landfill GCCS wellheads for static pressure and indications of air infiltration following NSPS operating standards.
§60.752 (b)(2)(ii)(A)(4)	Section 4.6.4	Page E-2, Section 4	Subsurface migration of LFG will be controlled.	The landfill GCCS shall control potential off-site subsurface migration through proper operation of the GCCS and control will be verified by the monitoring of perimeter monitoring probes installed at the site.
§60.752 (b)(2)(iii)	Section 4.6.5		Route all the collected LFG to a control system.	The landfill GCCS shall route the collected LFG to a control system that complies with the requirements §60.752 (b)(2)(iii)(A), (B), or (C).

Regulatory Citation	Report Reference	Appendix E Reference[1]	Regulatory Requirement	Implementation of Regulatory Requirement
§60.753(a)	Section 4.1		Operate the collection system such that LFG is collected from each area, cell, or group of cells in the MSW landfill in which solid waste has been in place for: (1) 5 years or more if active; or (2) 2 years or more if closed or at final grade.	The GCCS is and will be installed to collect LFG from all areas of the landfill that conform to this requirement. Since the Landfill is active, expansion of the GCCS will be as required and in accordance with this requirement.
§60.753(b)	Section 5.1 Section 6		Operate the collection system with negative pressure at each well head.	Extraction wells shall operate under a negative pressure, except for any approved exemptions and alternatives.
§60.753(c)	Section 6.1.3		Operate each interior well head in the collection system with a LFG temperature of less than 55° C and with either a nitrogen level less than 20 percent or an oxygen level less than 5 percent. The owner or operator may establish a higher operating temperature, nitrogen, or oxygen value at a particular well. A higher operating value demonstration shall show supporting data that the elevated parameter does not cause fires or significantly inhibit anaerobic decomposition by killing methanogens.	Extraction wells will operate under these conditions, except for any approved exemptions and alternatives.
§60.755(a)(1)(iii)	Section 2.1.4 Section 3.3 Section 4.1	Page E-6, Section 17	§60.755 (a)(1) For purposes of calculating the maximum expected LFG generation flow rate from the landfill to determine compliance with §60.752 (b)(2)(iii)(1), one of the following equations shall be used. The k and L_o factors should be those published in the most recent Compilation of Air Pollutant Emission Factors (AP-42) or other site-specific values demonstrated to be appropriate and approved by the Administrator.	The maximum flow for evaluating the initial enclosed flare for the GCCS was derived from the USEPA NSPS-based model using site specific data in accordance with §60.755 (a)(1)(iii). Following installation of the initial GCCS, subsequent GCCS expansion

Regulatory Citation	Report Reference	Appendix E Reference[1]	Regulatory Requirement	Implementation of Regulatory Requirement
			§60.755 (a)(1)(iii) If a collection and control system has been installed, actual flow data may be used to project the maximum expected LFG generation flow rate instead of, or in conjunction with, the equations in paragraphs (a)(1)(i) and (ii) of this section.	sizing was based on actual flow data and was used to project future flows.
§60.756	Section 6.2.5		Monitoring of Operations	The WPWMA will comply with the provisions of this rule.
§60.757	Section 5.1.4		Reporting Requirements	The WPWMA will comply with the provisions of this rule.
§60.758	Section 6		Recordkeeping Requirements	The WPWMA will comply with the provisions of this rule.

(1) From Appendix E ("Collection System Design Plans") of the NSPS Enabling Documents ("Municipal Solid Waste Landfills, Volume 1: Summary of the Requirements for the New Source Performance Standards and Emission Guidelines for Municipal Solid Waste Landfills", EPA-453R/96-004).

TABLE 2 - LANDFILL GAS COLLECTION AND CONTROL SYSTEM DESIGN REVIEW CHECKLIST

Landfill Site Name: *Western Regional Sanitary Landfill*
Location of Landfill: *3195 Athens Avenue, Lincoln, California*
Landfill Owner: *County of Placer*
Date of Submittal: *May 2016*

Goals for the GCCS: (control migration) (control emissions) (safety)
(circle all that apply, add more as appropriate)

Is the GCCS proposed to be (active) or passive? (circle one)

The proposed GCCS is active in nature and should serve to mitigate the potential for both subsurface and airborne migration, as well as the potential for accumulation in occupied structures.

---

1. Was the design certified by a PE? **60.752(b)(2)(i)** (Yes) No
(circle one)

   Maura Dougherty is a Registered Professional Engineer in California and has certified this Gas Collection and Control System (GCCS) Design Plan as the design engineer.

2. Was the design submitted within 12 months of the first report of the site exceeding 50 Mg/yr. of NMOC's? **60.752(b)(2)(i)** (Yes) No
(circle one)

   If no, describe circumstances: *On behalf of the Western Placer Waste Management Authority, Cornerstone Environmental Group, LLC has prepared this landfill gas collection and control system (GCCS) Design Plan to update and replace the existing GCCS Design Plan submitted in 2012. The facility's initial GCCS Design Plan (1998) was submitted in accordance with the NSPS compliance schedule and or local PCAPCD rules and regulations.*

3. Is the GCCS planned to be operational within 30 months of the first report of the site exceeding 50 MG/yr of NMOC's? **60.752(b)(2)(ii)** (Yes) No
(circle one)

   If no, describe circumstances: *At the time of this report, an active GCCS has been constructed and is operating at WSRL.*

4. Does the GCCS comply with the 2 year/5 year rule? **60.752(b)(2)(ii)(A)(2)**
   Yes (circle one) No

   If no, describe circumstances: *Please reference Section 4.6.4 of the Design Plan.*

5. What is the design life of the GCCS? **60.752(b)(2)(v)**
   (If less than 15 years describe why) *The design life of the GCCS includes the operational period of the facility up to 20 years. The system has been designed to accommodate expansion as needed in the future. Individual components of the GCCS will be replaced or repaired as age and usage reduce their efficiency.*

6. Is the GCCS design for the ~~ma~~ximum expected flow rates during its design life? **60.752(b)(2)(ii)(A)(1)** Yes (circle one) No

   If no, describe circumstances: *Please reference Section 4.5 of the Design Plan.*

7. Describe the measures taken to control lateral LFG migration in the design. If no measures were taken, describe why? **60.752(b)(2)(ii)(A)(4)** *The design of the GCCS uses active extraction to mitigate the potential for lateral landfill gas (LFG) migration. This process is enhanced by the presence of a low-permeability soil and/or flexible membrane liner (FML) base liner system as well as a low-permeability soil and/or FML final cap system where applicable. Please reference Section 4.1 of the Design Plan.*

8. If a passive system is planned, are the necessary liners in place? **60.752(b)(2)(ii)(B)(2)**
   Yes No (circle one)
   If no, describe circumstances:
   Not Applicable – an active system is installed and operating.

9. Is adequate density of collectors planned? Refer to Section 5.1 Yes (circle one) No

   If no, describe circumstances:
   Please reference Section 4.2 of the Design Plan.

10. Is the LFG Conveyance System sized properly? Refer to Section 5.2
    Yes (circle one) No

    The LFG conveyance system is adequately sized to handle the future peak LFG generation rate calculated using the United States Environmental Protection Agency

(USEPA) LandGEM V3.02, and is expandable. The LFG conveyance system may be expanded to handle future LFG generation rates in accordance with the New Source Performance Standards (NSPS) to mitigate surface and lateral LFG migration. Please reference Sections 4.4.1.2 and 4.6.5 of the Design Plan.

11. Is the LFG planned to be routed to a control device? **60.752(b)(2)(iii)**

    (Yes) No
    (circle one)

    Please reference Section 4.6.5 of the Design Plan.

12. Describe the control device utility flare (enclosed flare) other
    (circle one)

    The control devices installed consist of two enclosed LFG flares rated for 2,500 and 450 standard cubic feet per minute (scfm) of LFG at 50 percent methane, respectively. The flares are operated in accordance with §60.752(b)(2). The Landfill also provides LFG to an onsite Third Part Power Plant operated under a separate permit. A proposed 3,000 scfm enclosed flare has been proposed for installation in 2017. Please reference Section 4.6.5 of the Design Plan.

13. If the control device is a flare, does it include continuous temperature monitoring and a flow measurement device? **60.756(b) and (c)** (Yes) No
    (circle one)

    If no, describe circumstances: *The WPWMA flare and the small flare at the LFGTE facility have paperless recorders which monitor and record data, including both the flares' operating temperatures and flow rates to demonstrate combustion and the inlet LFG flow rate, in accordance with §60.756. Please reference Section 4.6.5 of the Design Plan.*

14. Is the flare sized properly? Refer to section 5.3 of the student manual.

    (Yes) No
    (circle one)

    The flares are adequately sized to accommodate the predicted flow rate in accordance with §60.752(b)(2)(iii)(B). Please reference Section 4.6.5 of the Design Plan.

15. If a control device other than a flare is planned, describe the estimated hours and duration it will be down for maintenance per year:

    The WPWMA flare will act as the primary control device. The small flare at the LFGTE facility is used for handling excess LFG not utilized by the power plant if the excess LFG is of insufficient quantity for operating the WPWMA flare.

16. Operational Issues **60.753(b), (c), (d), (e), (f)**
Will the GCCS be operated with a vacuum at every well? (Yes) No
(circle one)

The GCCS will be operated with a vacuum at each extraction point, with the exception of mitigating circumstances under §60.753(b)(1).

17. Will the GCCS be operated at the appropriate LFG temps? (Yes) No
(circle one)

The GCCS is intended to operate at LFG temperatures below 55ºC (131ºF). Please see Section 4.1.14 for details.

18. Will the GCCS be operated with minimal amounts of air? (Yes) No
(circle one)

The GCCS is designed to prevent excessive air infiltration. Please reference Section 4.1.10 of the Design Plan.

19. Will monitoring be done monthly to confirm these operational issues?
(Yes) No
(circle one)

Monitoring will be conducted in accordance with NSPS requirements. Please reference Section 4.6.4 of the Design Plan.

20. Will surface emissions monitoring be completed? (Yes) No
(circle one)

Monitoring will be conducted in accordance with NSPS requirements. Please reference Section 4.2 of the Design Plan.

21. Will the blower automatically be shutdown if the control device is inoperable?
(Yes) No
(circle one)

The blower system will automatically be shut down if the control device becomes inoperable. Please reference Section 4.6.5 of the Design Plan.

22. Does the GCCS include fittings to allow connection of additional collectors if necessary in the future? **60.756(2)** (Yes) No
(circle one)

If no, describe circumstances: *The header system incorporates tees with blind flanges along the transmission piping to facilitate expansion of the system, including additional collectors and control devices. Additionally, high density polyethylene*

(HDPE) piping can be readily modified to accept tees or other fittings necessary for system expansion.

23. Does the wellhead for all collectors include at least one sample port and one thermometer port? **60.756(2)** (Yes) No

(circle one)

If no, describe circumstances: *The wellheads for all collectors include at least one sample port and one thermometer port. Please reference Section 4.6.4 and Appendix A of the Design Plan.*

APPENDIX A
2016 GCCS DESIGN DRAWINGS

CONSTRUCTION PLANS
FOR 2016 GCCS EXPANSION

WESTERN PLACER WASTE MANAGEMENT AUTHORITY
WESTERN REGIONAL SANITARY LANDFILL
PLACER COUNTY, CALIFORNIA

AUGUST 2016

PREPARED FOR:

WESTERN PLACER WASTE MANAGEMENT AUTHORITY

PREPARED BY:

GOLDER ASSOCIATES INC.
425 LAKESIDE DRIVE
SUNNYVALE, CA 94085
(408) 220-9223

REGIONAL MAP

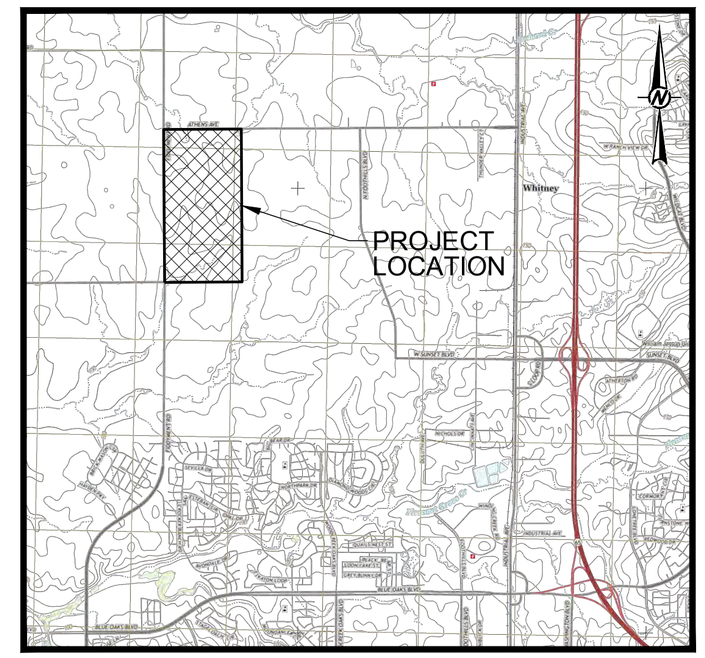

LOCATION MAP

0 4000 8000

1" = 4000' FEET

GENERAL NOTES

SCOPE OF WORK

GENERAL

THE PROPOSED PROJECT IS THE CONSTRUCTION OF EXPANSIONS AND UPGRADES TO THE LANDFILL GAS COLLECTION AND CONTROL SYSTEM (GCCS) AT THE WESTERN REGIONAL SANITARY LANDFILL (WRSL). THESE PLANS SHALL BE USED WITH THE TECHNICAL SPECIFICATIONS AND THE COUNTY OF PLACER STANDARD SPECIFICATIONS AND STANDARD DRAWINGS. THE PROJECT INCLUDES FOUR MAJOR ELEMENTS OF WORK: 1) PROVIDING UPGRADES AND REPLACEMENT OF LANDFILL GAS (LFG) BLOWER AND FLARE EQUIPMENT, INCLUDING MODIFICATIONS TO THE EXISTING CIVIL, MECHANICAL, ELECTRICAL SYSTEMS; 2) EXPANDING THE LFG COLLECTION WELL AND PIPING SYSTEM; 3) PROVIDING AND ERECTING NEW PRE-ENGINEERED METAL BUILDINGS IN THE BLOWER FLARE STATION (BFS); 4) PROVIDING AND INTEGRATING NEW BLOWER/FLARE SYSTEM CONTROLS AND A NEW SUPERVISORY CONTROL AND DATA ACQUISITION (SCADA) SYSTEM FOR COMPREHENSIVE BFS AND SITE REMOTE MONITORING AND CONTROL.

SITE INFORMATION AND DESIGNS IN THESE DRAWINGS ARE DEPICTED SCHEMATICALLY. A BASE CONCEPTUAL PLAN IS SHOWN IN DRAWING 7A. THE PLAN INCLUDES NEW 480VAC ELECTRICAL SERVICE AND EQUIPMENT, A SECOND NEW LFG BLOWER, AND ADDITIONAL SITE PREPARATION AND DECOMMISSIONING WORK AS SHOWN IN THE DRAWINGS OR DESCRIBED IN THE CONTRACT DOCUMENTS. THE CONTRACTOR SHALL SUBMIT SHOP DRAWINGS AS OUTLINED IN GENERAL CONDITIONS C-2. THE CONTRACTOR MAY SUBMIT ALTERNATIVE LAYOUTS AND/OR OTHER VALUE ENGINEERING CHANGE PROPOSALS FOR THE AUTHORITY'S CONSIDERATION. THE FINAL SHOP DRAWINGS SHALL REFLECT THE ALTERNATIVE LAYOUTS AND VALUE ENGINEERING CHANGE PROPOSALS ACCEPTED BY THE AUTHORITY AND SHALL BE FULLY INTEGRATED WITH ACTUAL SITE CONDITIONS AT THE TIME OF CONSTRUCTION. THE FINAL SHOP DRAWINGS AND LAYOUTS MUST COMPLY WITH ALL PERFORMANCE REQUIREMENTS AND FUNCTIONAL INTENTS AS SHOWN OR DESCRIBED IN THESE CONTRACT DOCUMENTS. CONTRACTOR SHALL PROVIDE, INSTALL AND DEMONSTRATE PROPER OPERATION OF ALL EQUIPMENT AND COMPONENTS SHOWN IN THE CONTRACT DRAWINGS AND FINAL SHOP DRAWINGS OR DESCRIBED IN THE CONTRACT SPECIFICATIONS. THE CONTRACTOR SHALL ALSO MAINTAIN THE GCCS AND LFG DELIVERY PROCESS IN CONTINUOUSLY ACTIVE AND COMPLIANT OPERATION AT ALL TIMES THROUGHOUT THE DURATION OF THE PROJECT IN ACCORDANCE WITH THE CONTRACT DOCUMENTS, AND DECOMMISSION REPLACED AND UNNECESSARY COMPONENTS AS DESIGNATED BY THE WPWMA. THESE DESCRIPTIONS ARE FOR GENERAL INFORMATION ONLY. THE CONTRACTOR SHALL BE RESPONSIBLE FOR COMPLETING THE WORK IN ACCORDANCE WITH THE ENTIRETY OF THE CONTRACT DOCUMENTS.

LFG BLOWER FLARE STATION:

THE CONTRACTOR SHALL PROCURE, CONSTRUCT, CONNECT, START-UP, AND SUCCESSFULLY TEST AN APPROVED ENCLOSED LFG FLARE, BLOWERS, AND APPURTENANT CONTROL SYSTEMS AND COMPONENTS FOR THE BFS. THE CONTRACTOR SHALL INSTALL THE NEW GAS BLOWERS IN PARALLEL SO THAT EACH CAN PROVIDE CONSISTENT VACUUM TO THE LANDFILL FOR EXTRACTION OF THE LFG FLOWS REQUIRED FOR REGULATORY COMPLIANCE. THE WELLFIELD HEADER VACUUM SHALL BE CONTROLLED BY ADJUSTING FLOW TO THE FLARE AND DIRECT BLOWER SPEED CONTROL. THE BLOWER DISCHARGE FLOW SHALL BE CONTROLLED TO CONVEY THE LFG AT CONSISTENT PRESSURE TO FUEL THE ADJACENT E2001 POWER GENERATION FACILITY (PGF), WITH AUTOMATIC DIVERSION OF EXCESS LFG TO THE NEW FLARE FOR THERMAL OXIDATION. THE NEW FLARE CONTROLS SHALL INCLUDE AUTOMATED FLOW, COMBUSTION AND EMISSION CONTROLS. THE NEW FLARE SHALL HAVE HIGH OPERATIONAL TURNDOWN CHARACTERISTICS TO ACCOMMODATE LFG FLOWS FROM 2% TO 100% OF ITS MAXIMUM DESIGN CAPACITY. CONTRACTOR SHALL:

- PROVIDE SUBGRADE PREPARATION, ENGINEERED FILL, AND CONCRETE FOUNDATIONS FOR PROPER PLACEMENT AND ANCHORING OF ALL EQUIPMENT AND STRUCTURES.
- PROVIDE THE NEW EQUIPMENT AS PRE-ASSEMBLED AND PRE-WIRED, SKID-MOUNTED, FULLY-INTEGRATED PROCESS PACKAGES.
- EXTEND AND CONNECT NEW AND EXISTING PIPING AND UTILITIES (LFG, PROPANE, COMPRESSED AIR, CONDENSATE, LEACHATE, ETC.)
- COMPLETE ELECTRICAL POWER, CONTROL AND COMMUNICATION CONNECTIONS BETWEEN EXISTING SERVICE PANEL, EXISTING AND NEW CONTROL PANELS, AND FIELD COMPONENTS, A 480VAC 3 PHASE POWER SYSTEM.
- SUCCESSFULLY START-UP, TEST AND OPERATE ALL NEW EQUIPMENT AND CONTROLS.

THE CONTRACTOR SHALL PROVIDE DECOMMISSIONING, DEMOLITION, AND REMOVAL OF THE EXISTING FLARE, 25HP BLOWERS, PIPING AND COMPONENTS, PHASED TO ENABLE INSTALLATION OF THE NEW EQUIPMENT AND STRUCTURES. THE CONTRACTOR SHALL RELOCATE AND REINSTALL EXISTING EQUIPMENT AND EXTEND CONNECTIONS AS SHOWN IN THE PLANS, INCLUDING TWO AIR COMPRESSORS AND A PROPANE STORAGE TANK, TO ENABLE INSTALLATION OF THE NEW EQUIPMENT AND STRUCTURES. THE CONTRACTOR SHALL PROVIDE TEMPORARY POWER, PIPING AND CONTROLS AS NEEDED TO MAINTAIN CONTINUOUS LFG CONVEYANCE TO THE PGF AND EXISTING FLARE FOR THE PROJECT DURATION THROUGH SUCCESSFUL COMPLETION, START-UP, SUSTAINED OPERATION, AND ACCEPTANCE OF THE NEW EQUIPMENT BY THE OWNER.

- IDENTIFY, LOCATE, POTHOLE AND PROTECT ALL EXISTING UNDERGROUND FACILITIES AND UTILITIES IN THE AREAS OF WORK.
- INSTALL TEMPORARY PIPING AND CONTROLS NECESSARY TO PROVIDE CONTINUOUS AND SAFE LFG CONVEYANCE TO THE PGF AND EXISTING FLARE DURING THE ENTIRE PROJECT.
- DECOMMISSION EXISTING FLARE, BLOWERS, APPURTENANT PIPING AND EQUIPMENT AS DESIGNATED BY WPWMA.
- RESTORE AND CLEAN-UP ALL WORK AREAS FOR PROJECT CLOSE-OUT.

LFG COLLECTION SYSTEM:

CONTRACTOR SHALL PROVIDE MATERIALS, LABOR AND EQUIPMENT TO CONSTRUCT NEW LFG EXTRACTION WELLS AND COLLECTORS AND ALL PIPING COMPONENTS AND APPURTENANCES REQUIRED FOR CONNECTION TO EXISTING OPERATIONAL FACILITIES. CONTRACTOR SHALL SUPPLY AND INSTALL LFG EXTRACTION WELLS, COLLECTORS, CONDENSATE DRAINS/SUMPS, CONVEYANCE PIPING, VALVES, FITTINGS AND APPURTENANCES.

SYSTEM CONTROLS AND INTEGRATION:

THE CONTRACTOR SHALL PROVIDE A COMPREHENSIVE CONTROL SYSTEM FOR BOTH AUTOMATED AND MANUAL OPERATION OF THE NEW BLOWER AND FLARE EQUIPMENT. THE FLARE CONTROLS SHALL INCLUDE A PROGRAMMABLE LOGIC CONTROLLER (PLC) THAT COORDINATES AUTOMATIC OPERATION OF THE BLOWERS AND FLARE FOR CONSISTENT CONTROL AND STABILIZATION OF LFG PRESSURES AND FLOWS TO THE PGF AND THE FLARE. THE BLOWER CONTROLS SHALL INCLUDE VARIABLE FREQUENCY DRIVE AND NECESSARY MONITORING AND CONTROL DEVICES TO FACILITATE ACCURATE SETTING AND CONTROL OF BLOWER INLET AND DISCHARGE PRESSURES AND FLOW RATES.

THE CONTRACTOR SHALL PROVIDE A NEW SCADA SYSTEM AND INTEGRATION OF SPECIFIED SIGNALS AND DATA STREAMS FROM BOTH NEW AND EXISTING EQUIPMENT CONTROLS. SCADA SYSTEM SHALL INCLUDE ALL REQUIRED TELEMETRY, CONNECTIONS AND COMPREHENSIVE INTEGRATION WITH EXISTING AND NEW BFS AND SITE EQUIPMENT FOR GRAPHICAL COMMUNICATION OF MONITORING DATA, ALARMS AND OTHER SIGNALS FOR VIEWING, ACCESS AND ADJUSTMENTS BY AUTHORIZED REMOTE SYSTEM OPERATORS.

REGULATORY COMPLIANCE:

THE PLACER COUNTY AIR POLLUTION CONTROL DISTRICT (PCAPCD) WILL ISSUE AN AUTHORITY TO CONSTRUCT (ATC) PERMIT FOR THE NEW FLARE EQUIPMENT. THE CONTRACTOR SHALL PROCURE AND INSTALL THE NEW EQUIPMENT TO OPERATE IN CONTINUOUS COMPLIANCE WITH ALL PERMIT CONDITIONS, PCAPCD REGULATIONS, AND OPERATIONAL REQUIREMENTS AS MAY BE FURTHER DESCRIBED IN THE CONTRACT DOCUMENTS.

THE CONTRACTOR SHALL PROVIDE ALL CONSTRUCTION AND PRODUCTS IN STRICT ACCORDANCE WITH APPLICABLE CODES AND ORDINANCES OF THE COUNTY OF PLACER, INCLUDING ALL APPLICABLE STATE AND FEDERAL REGULATIONS. IT SHALL BE THE RESPONSIBILITY OF THE CONTRACTOR AND EACH SUBCONTRACTOR TO BE IN FULL COMPLIANCE, REGARDLESS OF ANY DISCREPANCIES THAT MAY EXIST WITHIN THE DRAWINGS OR SPECIFICATIONS. IT SHALL BE THE RESPONSIBILITY OF EACH SUBCONTRACTOR TO NOTIFY THE CONTRACTOR, WHO IN TURN SHALL NOTIFY THE OWNER/ENGINEER PRIOR TO PERFORMANCE, IF A CONFLICT EXISTS BETWEEN ANY PORTION OF THE CONTRACT DOCUMENTS OR WORK AND APPLICABLE CODES OR ORDINANCES, OR FOR ANY OTHER APPARENT CONFLICT OR DISCREPANCY OF THE CONTRACT DRAWINGS OR SPECIFICATIONS.

BASIS OF EQUIPMENT DESIGN AND MANUFACTURE: THE CONTRACTOR SHALL PROVIDE EQUIPMENT DESIGNED AND MANUFACTURED TO COMPLY WITH THE REQUIREMENTS OF CURRENT NATIONAL, STATE AND LOCAL CODES AND STANDARDS FOR WASTE GAS PROCESSING EQUIPMENT, INCLUDING BUT NOT LIMITED TO:

- STRUCTURAL DESIGN AISC
- SHOP AND RECORD DRAWINGS ANSI S5.1
- FABRICATION (WELDING) AWS
- ELECTRICAL (COMPONENTS) UL
- ELECTRICAL (WIRING) NEC
- PAINTING, SANDBLAST SSPL, SP-6

IF REQUIRED FOR APPROVED SUBSTITUTIONS, THE CONTRACTOR SHALL PROVIDE ADDITIONAL FOUNDATION OR STRUCTURAL ENGINEERING IN ACCORDANCE WITH THE CALIFORNIA BUILDING CODE (CBC, INTERNATIONAL CONFERENCE OF BUILDING OFFICIALS [ICBO], 2013 EDITION).

INDEX OF DRAWINGS

Sheet Number	Sheet Title	Sheet Number Sequence
T1	TITLE SHEET	1
1	LANDFILL SITE PLAN	2
2	LFG COLLECTION SYSTEM PLAN-SOUTHERN AREA	3
3	VERTICAL LFG EXTRACTION WELL DETAILS	4
4	LFG PIPING DETAILS	5
5	HORIZONTAL LFG COLLECTION DETAILS	6
6	NOT IN CONTRACT	7
6A	BLOWER-FLARE STATION EXISTING CONDITIONS-DECOM PLAN	8
7	NOT IN CONTRACT	9
7A	BLOWER-FLARE STATION CONCEPTUAL SITE PLAN	10
7B	CONDENSATE DETAILS	11
8	STRUCTURAL NOTES AND DETAILS	12
9	BLOWER-FLARE STATION FOUNDATION DETAILS	13
10	PEM STORAGE BUILDING FOUNDATION DETAILS	14
11	EQUIPMENT CANOPY FOUNDATION DETAILS (PRELIMINARY)	15
12	METHANE PROTECTION DETAILS	16
13	NOT IN CONTRACT	17
14	NOT IN CONTRACT	18
14A	BLOWER-FLARE EQUIPMENT TOP ASSEMBLY	19
15	BLOWER-FLARE EQUIPMENT PID LEGEND	20
16	NOT IN CONTRACT	21
16A	BLOWER-FLARE CONCEPTUAL EQUIPMENT PID (1 of 2)	22
17	BLOWER-FLARE EQUIPMENT PID (2 of 2)	23

Sheet Number	Sheet Title	Sheet Number Sequence
E1	NOT IN CONTRACT	24
E2	NOT IN CONTRACT	25
E3	NOT IN CONTRACT	26
E4	NOT IN CONTRACT	27
E5	NOT IN CONTRACT	28
E6	NOT IN CONTRACT	29
E1A	ELECTRICAL ONE LINE DIAGRAM	30
E2A	ELECTRICAL MCC	31
E3A	ELECTRICAL EQUIPMENT SITE PLAN	32
E4A	ELECTRICAL CONDUIT BLOCK DIAGRAM	33
E5A	ELECTRICAL DETAILS	34
E6A	ELECTRICAL FLOOR PLAN, STORAGE BUILDING	35
E7A	ELECTRICAL SITE PLAN REMOVAL	36
E8A	ELECTRICAL ONE LINE DIAGRAM & MCC REMOVAL	37
S1	PEM STORAGE BUILDING COVER SHEET	38
S2	PEM STORAGE BUILDING ANCHOR BOLT PLAN	39
S3	PEM STORAGE BUILDING LOADS & ANCHOR REQUIREMENTS	40
S4	PEM STORAGE BUILDING ANCHOR DETAILS	41
S5	PEM STORAGE BUILDING ROOF FRAME PLAN	42
S6	PEM STORAGE BUILDING SIDEWALL, FRAME LINE A	43
S7	PEM STORAGE BUILDING SIDEWALL, FRAME LINE F	44
S8	PEM STORAGE BUILDING SIDEWALL, FRAME LINE 1	45
S9	PEM STORAGE BUILDING SIDEWALL, FRAME LINE 4	46

Sheet Number	Sheet Title	Sheet Number Sequence
S10	PEM STORAGE BUILDING RIGID FRAME	47
S11	PEM CANOPY BUILDING COVER SHEET	48
S12	PEM CANOPY BUILDING ANCHOR ROD PLAN	49
S13	PEM CANOPY BUILDING ANCHOR DETAILS	50
S14	PEM CANOPY BUILDING LOADS & ANCHOR REQUIREMENTS	51
S15	PEM CANOPY BUILDING PRIMARY STEEL LOCATION PLAN	52
S16	PEM CANOPY BUILDING ROOF FRAME PLAN	53
S17	PEM CANOPY BUILDING ROOF SHEETING PLAN	54
S18	PEM CANOPY BUILDING SIDEWALL, FRAME LINE A	55
S19	PEM CANOPY BUILDING SIDEWALL, FRAME LINE B	56
S20	PEM CANOPY BUILDING SIDEWALL, FRAME LINE 1	57
S21	PEM CANOPY BUILDING CROSS SECTION, FRAME LINE 2	58

THE PROJECT WAS ORIGINALLY DESIGNED AND BID AS A REPLACEMENT OF THE BLOWER/FLARE STATION THAT INCLUDED REUSING SEVERAL COMPONENTS OF THE EXISTING FACILITIES AND 240 VAC MAIN POWER SUPPLY. THE CURRENT PROJECT, BIDDING PROCESS AND BID FORM IS BASED ON UPGRADING THE FACILITY TO USE 480 VAC POWER, REUSING VERY FEW AND SELECTED FACILITIES, AND USING A REVISED LAYOUT SHOWN ON SHEET 7A. ANY REFERENCES TO NEW 240 VAC EQUIPMENT IN THE PLANS OR SPECIFICATIONS ARE INTENDED TO BE 480 VAC.

ABBREVIATIONS

A	COMPRESSED AIR
AB	AGGREGATE BASE
AMP	AMPERE
ASS'Y	ASSEMBLY
B.P.	BRASS PIPE
BTU/HR	BRITISH THERMAL UNITS PER HOUR
CLR	CLEARANCE
CLSM	CONTROLLED LOW STRENGTH MATERIAL
CMP	CORRUGATED METAL PIPE
C	CONDENSATE
CO	CLEAN OUT
CS	CONDENSATE SUMP
DI	DUCTILE IRON
DIA	DIAMETER

DISC	DISCONNECT
E	EASTING OR ELECTRIC
(E)	EXISTING
ELEV.	ELEVATION
ET	COMMUNICATION
E.W.	EACH WAY
F	FAHRENHEIT
FT-MSL	FEET- MEAN SEA LEVEL
FPT	FEMALE PIPE THREAD
GPM	GALLON PER MINUTE
HDG	HOT DIPPED GALVANIZED
HDPE	HIGH DENSITY POLYETHYLENE
I.D.	INSIDE DIAMETER
IN.W.C.	INCH WATER COLUMN (GAUGE)
KOP	KNOCK-OUT-POT

KVA	KILOVOLT-AMP
LFG	LANDFILL GAS
MAX	MAXIMUM
MIN	MINIMUM
MPT	MALE PIPE THREAD
N	NORTHING
N.I.C.	NOT IN CONTRACT
NTS	NOT TO SCALE
NPT	NATIONAL PIPE THREAD
Ø	DIAMETER OR PHASE
O.C.	ON CENTER
O.D.	OUTSIDE DIAMETER
P&ID	PIPING AND INTRUMENTATION DIAGRAM
PSI, PSIG	POUND PER SQUARE INCH, GAUGE

PVC	POLYVINYL CHLORIDE
REF.	REFERENCE
REQ'D	REQUIRED
SCFM	STANDARD CUBIC FEET PER MINUTE
SCH	SCHEDULE
SDR	STANDARD DIMENSION RATIO
SS/SSTL	STAINLESS STEEL
T/C	THERMOCOUPLE
TYP.	TYPICAL
UNO	UNLESS NOTED OTHERWISE
VAC	VOLTS, ALTERNATING CURRENT

REV.	YYYY-MM-DD	DESCRIPTION	PREPARED	DESIGNED	REVIEWED	APPROVED
0	2016-08-19	ISSUED FOR BIDDING	MAL	APW	APW	RVW

SEAL

CLIENT
WESTERN PLACER WASTE MANAGEMENT AUTHORITY
3033 FIDDYMENT ROAD
ROSEVILLE, CA. 95747

CONSULTANT
GOLDER ASSOCIATES, INC.
425 LAKESIDE DRIVE
SUNNYVALE, CALIFORNIA 94085
USA
+[1] (408) 220-9223
www.golder.com

PROJECT
WESTERN REGIONAL SANITARY LANDFILL
2016 GCCS EXPANSION

TITLE
TITLE SHEET

PROJECT NO. 1420152 | REV. 0 | 1 of 58 | DRAWING T1

IF THIS MEASUREMENT DOES NOT MATCH WHAT IS SHOWN, THE SHEET SIZE HAS BEEN MODIFIED FROM: ANSI D

0 1in

Path: \\sacramento\acad\Sites\Western Regional L\FCIVIL 3D\1420152_ GCCS Expansion\Concept 2 (IFB Rev0)\ | File Name: 1420152-T1_GCCS_TITLE SHEET.dwg

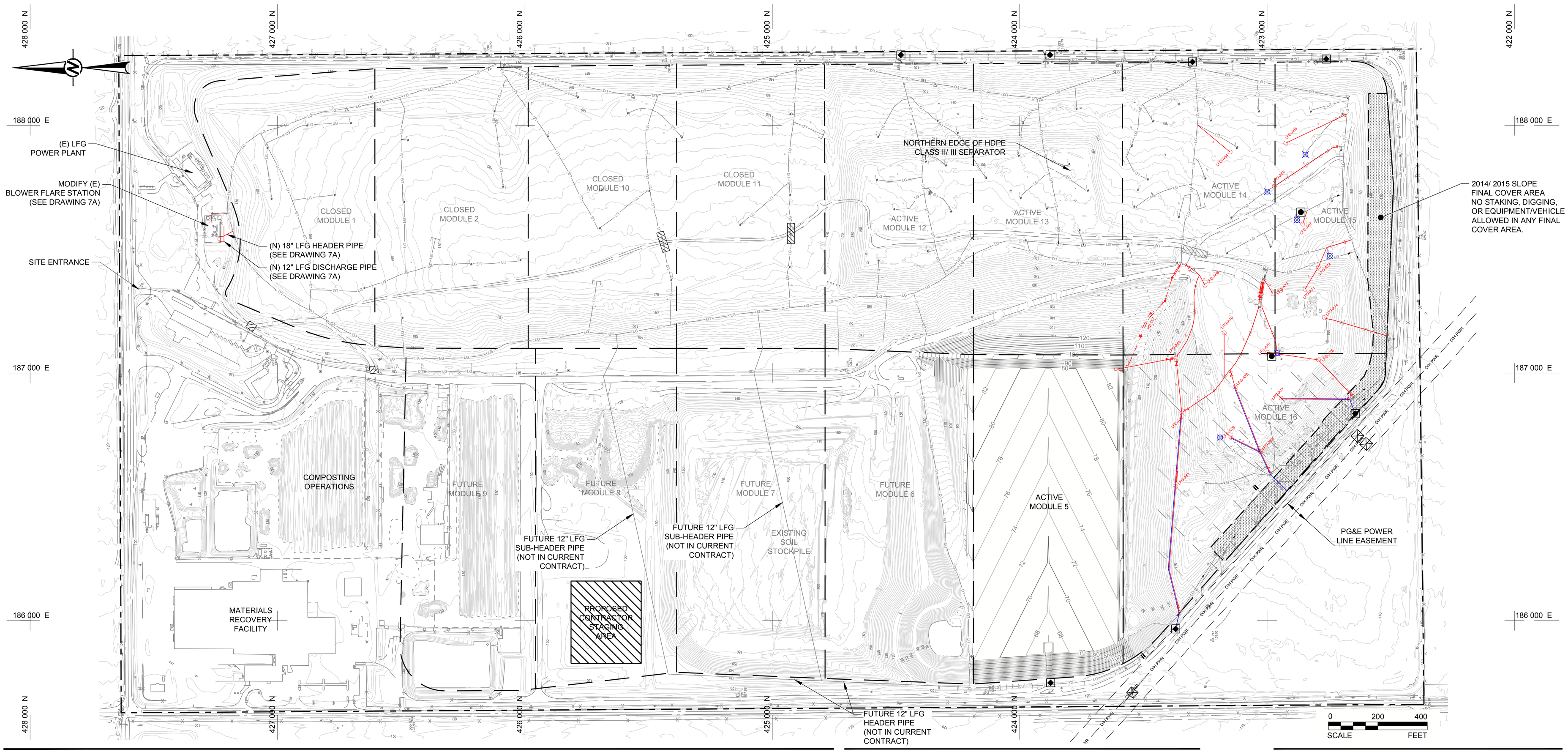

LEGEND

PROPERTY BOUNDARY	(E) LEACHATE COLLECTION SUMP	CONSTRUCT LFG/LEACHATE WELLHEAD (3/2|5)
MODULE LIMITS	(E) PIPE REDUCER	DECOMMISSION (E) LFG COLLECTION WELL (3/2|3)
LG (E) LANDFILL GAS PIPE	(E) LFG PIPE MANIFOLD	CONSTRUCT BUTTERFLY VALVE (5/2|4)
LFG–A5 (E) LFG COLLECTION WELL (INFILL)	(E) ROAD CROSSING	CONSTRUCT PIPE REDUCER(S)
EW– (E) LFG COLLECTION WELL (PERIMETER)	(E) ISOLATION VALVE	CONSTRUCT ROAD CROSSING (4/2|4)
GW–7W (E) LFG COLLECTION WELL (PERIMETER)	CONSTRUCT LFG HORIZONTAL COLLECTOR	CONSTRUCT REMOTE MONITORING STATION (LEACHATE) (SEE NOTE 5)
GM–14X (E) GAS PROBE	CONSTRUCT LFG CONVEYANCE PIPE (ON GRADE)	
MW–11 GROUNDWATER MONITORING WELL	CONSTRUCT CONDENSATE DRAIN TO LCRS (1/1|5)	CONSTRUCT REMOTE MONITORING STATION (LFG) (SEE NOTE 5)
	CONSTRUCT SINGLE CASING LFG EXTRACTION WELL (2/1|3)	CONSTRUCT AIR SUPPLY/ CONDENSATE PIPES (ON GRADE)

NOTES

1. THE LOCATIONS OF THE UTILITIES AND OTHER FACILITIES SHOWN IN THESE DRAWINGS WERE ESTIMATED FROM SITE INFORMATION PROVIDED BY THE OWNER AND ARE SCHEMATIC ONLY. BEFORE STARTING SITE WORK, THE CONTRACTOR SHALL COORDINATE WITH THE OWNER TO DETERMINE, VERIFY AND PROTECT THE ACTUAL LOCATIONS OF ALL UTILITIES AND FACILITIES THAT MAY BE USED OR AFFECTED BY THE WORK (WHETHER SHOWN OR NOT). CONTRACTOR TO CONTACT UNDERGROUND SERVICES ALERT (USA) WITH SUFFICIENT NOTICE TO LOCATE AND PROTECT ALL UTILITIES.
2. CONTRACTOR TO SURVEY AND MARK ALL EXISTING PIPE AND UTILITIES INDICATED ON THE DRAWINGS IN ALL WORK AREAS. CONTRACTOR TO POTHOLE PROPOSED EXCAVATION AREAS TO VERIFY THE LOCATION AND DEPTH OF IDENTIFIED SUBSURFACE FACILITIES. CONTRACTOR SHALL PROTECT ALL FACILITIES FROM DAMAGE AND SHALL REPAIR ALL DAMAGE AT NO COST TO THE OWNER.
3. THE DRAWING SCALES SHOWN ARE FOR GENERAL REFERENCE ONLY. DISTANCES, DIMENSIONS AND OTHER QUANTITIES SHALL NOT BE SCALED OFF THIS DRAWING.
4. THE CONTRACTOR SHALL COORDINATE REQUIREMENTS FOR PERSONNEL ACCESS AND EQUIPMENT STAGING AREAS WITH THE OWNER BEFORE STARTING SITE WORK.
5. SEE SPECIFICATION SECTION 13430 FOR REMOTE MONITORING STATION DETAILS. THE 2 LFG MONITORING STATIONS ARE CONCEPTUAL ONLY, AND WILL BE REVISED BY THE AUTHORITY BEFORE INSTALLATION.

REFERENCE

1. TOPOGRAPHIC SURVEY PROVIDED BY WPWMA, AERIAL PHOTOGRAPHY FLOWN 6-30-2015 BY AMERICAN AERIAL MAPPING, INC.

THE PROJECT WAS ORIGINALLY DESIGNED AND BID AS A REPLACEMENT OF THE BLOWER/FLARE STATION THAT INCLUDED REUSING SEVERAL COMPONENTS OF THE EXISTING FACILITIES AND 240 VAC MAIN POWER SUPPLY. THE CURRENT PROJECT, BIDDING PROCESS AND BID FORM IS BASED ON UPGRADING THE FACILITY TO USE 480 VAC POWER, REUSING VERY FEW AND SELECTED FACILITIES, AND USING A REVISED LAYOUT SHOWN ON SHEET 7A. ANY REFERENCES TO NEW 240 VAC EQUIPMENT IN THE PLANS OR SPECIFICATIONS ARE INTENDED TO BE 480 VAC.

Rev.	YYYY-MM-DD	DESCRIPTION	PREPARED	DESIGN	REVIEW	APPROVED
0	2016-08-19	ISSUED FOR BIDDING	MAL	APW	APW	RVW

CLIENT
WESTERN PLACER WASTE MANAGEMENT AUTHORITY
3033 FIDDYMENT ROAD
ROSEVILLE, CA. 95747

CONSULTANT

GOLDER ASSOCIATES, INC.
425 LAKESIDE DRIVE
SUNNYVALE, CALIFORNIA 94085
USA
+[1] (408) 220-9223
www.golder.com

PROJECT
WESTERN REGIONAL SANITARY LANDFILL
2016 GCCS EXPANSION

TITLE
LANDFILL SITE PLAN

PROJECT No. 1420152 | Rev. 0 | 2 of 58 | DRAWING 1

IF THIS MEASUREMENT DOES NOT MATCH WHAT IS SHOWN, THE SHEET SIZE HAS BEEN MODIFIED FROM: ANSI D

Path: \\sacramento\acad\Sites\Western Regional LF\CIVIL 3D\1420152_GCCS Expansion\Concept 2 (IFB Rev0\) | File Name: 1420152-01_GCCS_SITE PLAN.dwg

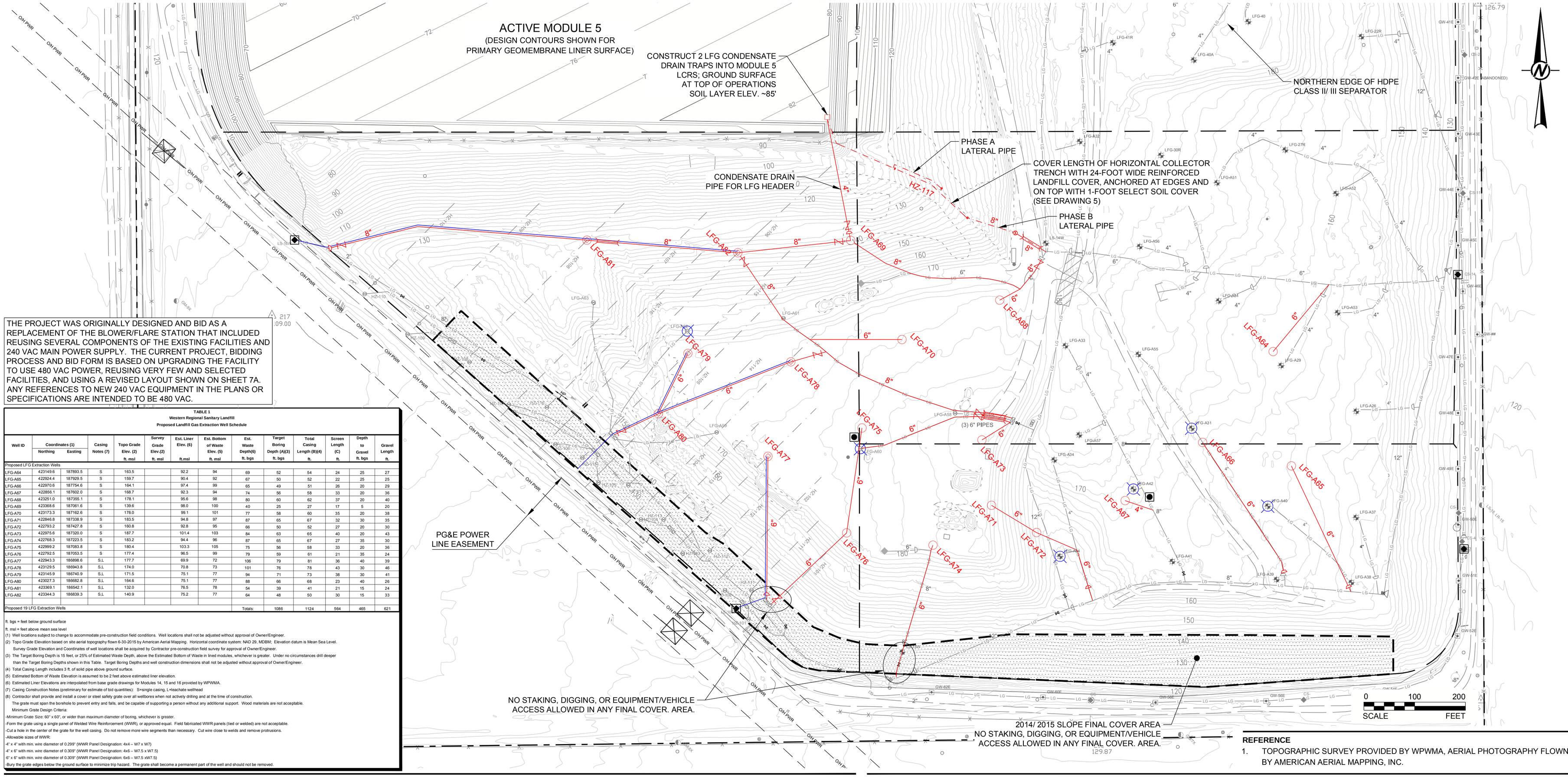

THE PROJECT WAS ORIGINALLY DESIGNED AND BID AS A REPLACEMENT OF THE BLOWER/FLARE STATION THAT INCLUDED REUSING SEVERAL COMPONENTS OF THE EXISTING FACILITIES AND 240 VAC MAIN POWER SUPPLY. THE CURRENT PROJECT, BIDDING PROCESS AND BID FORM IS BASED ON UPGRADING THE FACILITY TO USE 480 VAC POWER, REUSING VERY FEW AND SELECTED FACILITIES, AND USING A REVISED LAYOUT SHOWN ON SHEET 7A. ANY REFERENCES TO NEW 240 VAC EQUIPMENT IN THE PLANS OR SPECIFICATIONS ARE INTENDED TO BE 480 VAC.

TABLE 1
Western Regional Sanitary Landfill
Proposed Landfill Gas Extraction Well Schedule

Well ID	Coordinates (1) Northing	Coordinates (1) Easting	Casing Notes (7)	Topo Grade Elev. (2) ft. msl	Survey Grade Elev.(2) ft. msl	Est. Liner Elev. (6) ft.msl	Est. Bottom of Waste Elev. (5) ft. msl	Est. Waste Depth(6) ft. bgs	Target Boring Depth (A)(3) ft. bgs	Total Casing Length (B)(4) ft.	Screen Length (C) ft.	Depth to Gravel ft. bgs	Gravel Length ft.
Proposed LFG Extraction Wells													
LFG-A64	423149.6	187893.5	S	163.5		92.2	94	69	52	54	24	25	27
LFG-A65	422924.4	187929.5	S	159.7		90.4	92	67	50	52	22	25	25
LFG-A66	422870.6	187754.6	S	164.1		97.4	99	65	49	51	26	20	29
LFG-A67	422856.1	187602.0	S	168.7		92.3	94	74	56	58	33	20	36
LFG-A68	423251.0	187355.1	S	178.1		95.6	98	80	60	62	37	20	40
LFG-A69	423368.6	187061.6	S	139.6		98.0	100	40	25	27	17	5	20
LFG-A70	423173.3	187162.6	S	178.0		99.1	101	77	58	60	35	20	38
LFG-A71	422846.8	187338.9	S	183.5		94.8	97	87	65	67	32	30	35
LFG-A72	422793.2	187427.8	S	160.8		92.8	95	66	50	52	27	20	30
LFG-A73	422975.6	187320.0	S	187.7		101.4	103	84	63	65	40	20	43
LFG-A74	422768.3	187223.5	S	183.2		94.4	96	87	65	67	27	35	30
LFG-A75	422969.2	187083.8	S	180.4		103.3	105	75	56	58	33	20	36
LFG-A76	422792.5	187053.5	S	177.4		96.5	99	79	59	61	21	35	24
LFG-A77	422943.3	186898.6	S,L	177.7		69.9	72	106	79	81	36	40	39
LFG-A78	423129.5	186943.8	S,L	174.0		70.8	73	101	76	78	43	30	46
LFG-A79	423145.9	186740.9	S,L	171.5		75.1	77	94	71	73	38	30	41
LFG-A80	423027.3	186682.8	S,L	164.6		75.1	77	88	66	68	23	40	26
LFG-A81	423369.1	186542.1	S,L	132.0		76.5	78	54	39	41	21	15	24
LFG-A82	423344.3	186839.3	S,L	140.9		75.2	77	64	48	50	30	15	33
Proposed 19 LFG Extraction Wells								Totals:	1086	1124	564	465	621

ft. bgs = feet below ground surface
ft. msl = feet above mean sea level
(1) Well locations subject to change to accommodate pre-construction field conditions. Well locations shall not be adjusted without approval of Owner/Engineer.
(2) Topo Grade Elevation based on site aerial topography flown 6-30-2015 by American Aerial Mapping. Horizontal coordinate system: NAD 29, MDBM; Elevation datum is Mean Sea Level. Survey Grade Elevation and Coordinates of well locations shall be acquired by Contractor pre-construction field survey for approval of Owner/Engineer.
(3) The Target Boring Depth is 15 feet, or 25% of Estimated Waste Depth, above the Estimated Bottom of Waste in lined modules, whichever is greater. Under no circumstances drill deeper than the Target Boring Depths shown in this Table. Target Boring Depths and well construction dimensions shall not be adjusted without approval of Owner/Engineer.
(4) Total Casing Length includes 3 ft. of solid pipe above ground surface.
(5) Estimated Bottom of Waste Elevation is assumed to be 2 feet above estimated liner elevation.
(6) Estimated Liner Elevations are interpolated from base grade drawings for Modules 14, 15 and 16 provided by WPWMA.
(7) Casing Construction Notes (preliminary for estimate of bid quantities): S=single casing, L=leachate wellhead
(8) Contractor shall provide and install a cover or steel safety grate over all wellbores when not actively drilling and at the time of construction. The grate must span the borehole to prevent entry and falls, and be capable of supporting a person without any additional support. Wood materials are not acceptable.
Minimum Grate Design Criteria:
-Minimum Grate Size: 60" x 60", or wider than maximum diameter of boring, whichever is greater.
-Form the grate using a single panel of Welded Wire Reinforcement (WWR), or approved equal. Field fabricated WWR panels (tied or welded) are not acceptable.
-Cut a hole in the center of the grate for the well casing. Do not remove more wire segments than necessary. Cut wire close to welds and remove protrusions.
-Allowable sizes of WWR:
4" x 4" with min. wire diameter of 0.299" (WWR Panel Designation: 4x4 – W7 x W7)
4" x 6" with min. wire diameter of 0.309" (WWR Panel Designation: 4x6 – W7.5 x W7.5)
6" x 6" with min. wire diameter of 0.309" (WWR Panel Designation: 6x6 – W7.5 xW7.5)
-Bury the grate edges below the ground surface to minimize trip hazard. The grate shall become a permanent part of the well and should not be removed.

REFERENCE
1. TOPOGRAPHIC SURVEY PROVIDED BY WPWMA, AERIAL PHOTOGRAPHY FLOWN 6-30-2015 BY AMERICAN AERIAL MAPPING, INC.

LEGEND

- PROPERTY BOUNDARY
- MODULE LIMITS
- (E) LANDFILL GAS PIPE
- (E) LFG COLLECTION WELL (INFILL)
- (E) LFG COLLECTION WELL (PERIMETER)
- (E) LFG COLLECTION WELL (PERIMETER)
- (E) GAS PROBE
- GROUNDWATER MONITORING WELL
- (E) LEACHATE COLLECTION SUMP
- (E) PIPE REDUCER
- (E) LFG PIPE MANIFOLD
- (E) ROAD CROSSING
- (E) ISOLATION VALVE
- CONSTRUCT LFG HORIZONTAL COLLECTOR (1/2|5)
- CONSTRUCT LFG CONVEYANCE PIPE (ON GRADE)
- CONSTRUCT CONDENSATE DRAIN TO LCRS (1/2|5)
- CONSTRUCT SINGLE CASING LFG EXTRACTION WELL (2/2|1)
- CONSTRUCT LFG/LEACHATE WELLHEAD (3/2|5)
- DECOMMISSION (E) LFG COLLECTION WELL (3/2|3)
- CONSTRUCT BUTTERFLY VALVE (5/2|4)
- CONSTRUCT PIPE REDUCER(S)
- CONSTRUCT ROAD CROSSING (4/2|4)
- CONSTRUCT REMOTE MONITORING STATION (LEACHATE) (SEE NOTE 7)
- CONSTRUCT REMOTE MONITORING STATION (LFG) (SEE NOTE 7)
- CONSTRUCT AIR SUPPLY/ CONDENSATE PIPES (ON GRADE)

NOTE(S)
1. CONTRACTOR SHALL CAREFULLY INSPECT THE SITE AND VERIFY ALL DIMENSIONS AND GRADES BEFORE PROCEEDING WITH THE WORK. CONTRACTOR SHALL IMMEDIATELY NOTIFY THE OWNER/ENGINEER OF ANY FOUND DISCREPANCIES.
2. PIPE ALIGNMENTS SHOWN IN THE DRAWINGS ARE INTENDED TO BE A DEPICTION AND NOT AN EXACT OR COMPLETE REPRESENTATION OF THE FINISHED WORK. THE CONTRACTOR SHALL FIELD FIT PIPING TO ACCOMMODATE SITE CONDITIONS THAT VARY FROM THE CONTRACT DOCUMENTS AND/OR HAVE CHANGED OVER TIME. IN ACCORDANCE WITH THE SPECIFICATIONS, THE CONTRACTOR SHALL PROVIDE MINOR ADDITIONAL PIPE, FITTINGS AND OTHER ACCESSORIES REQUIRED TO COMPLETE A PROPERLY FUNCTIONING PIPING ALIGNMENT, EVEN THOUGH SUCH ITEMS AND/OR ALIGNMENTS MAY NOT BE SPECIFICALLY SHOWN IN THE DRAWINGS.
3. ALL EXCAVATIONS SHALL COMPLY WITH APPLICABLE TRENCH SAFETY AND CONFINED SPACE ENTRY REQUIREMENTS.
4. UNLESS NOTED OTHERWISE, CONTRACTOR SHALL INSTALL AND GRADE ALL LFG PIPES TO DRAIN CONTINUOUSLY TO CONDENSATE COLLECTION SUMPS WITH THE FOLLOWING BASIC GRADES AS A MINIMUM:
   - ABOVE GROUND LFG PIPE WITHIN THE LIMIT OF LANDFILLED WASTE: 2.0%
   - BURIED LFG PIPE WITHIN THE LIMIT OF LANDFILLED WASTE: 4.0%
   - BURIED LFG PIPE BELOW ROAD CROSSINGS WITHIN THE LIMIT OF LANDFILLED WASTE: 6%
   - BURIED LFG PIPE IN UNDISTURBED SOIL OR ENGINEERED FILL OUTSIDE THE LIMIT OF LANDFILLED WASTE: 1%
5. IF NEITHER THE SPECIFIED GRADE, NOR THE APPLICABLE BASIC MINIMUM GRADE, CAN BE ACHIEVED FOR A SPECIFIC PIPE SECTION, CONTRACTOR SHALL SUBMIT AN ALTERNATIVE GRADE FOR OWNER/ENGINEER REVIEW AND APPROVAL.
6. ANY SURVEY CONTROL POINT OR ESTABLISHED MONUMENT THAT IS DISTURBED OR COMPROMISED DURING CONTRACTOR'S WORK SHALL BE REPLACED AT NO COST TO THE OWNER.
7. SEE SPECIFICATION SECTION 13430 FOR REMOTE MONITORING STATION DETAILS. THE 2 LFG MONITORING STATIONS ARE CONCEPTUAL ONLY, AND WILL BE REVISED BY THE AUTHORITY BEFORE INSTALLATION.

Rev.	YYYY-MM-DD	DESCRIPTION	PREPARED	DESIGN	REVIEW	APPROVED
0	2016-08-19	ISSUED FOR BIDDING	MAL	APW	APW	RVW

CLIENT
WESTERN PLACER WASTE MANAGEMENT AUTHORITY
3033 FIDDYMENT ROAD
ROSEVILLE, CA. 95747

CONSULTANT
GOLDER ASSOCIATES, INC.
425 LAKESIDE DRIVE
SUNNYVALE, CALIFORNIA 94085
USA
+[1] (408) 220-9223
www.golder.com

PROJECT
WESTERN REGIONAL SANITARY LANDFILL
2016 GCCS EXPANSION

TITLE
LFG COLLECTION SYSTEM PLAN-SOUTHERN AREA

PROJECT No. 1420152 | Rev. 0 | 3 of 58 | DRAWING 2

IF THIS MEASUREMENT DOES NOT MATCH WHAT IS SHOWN, THE SHEET SIZE HAS BEEN MODIFIED FROM: ANSI D

0 1 in

Path: \\sacramento\acad\Sites\Western Regional LF\CIVIL 3D\1420152_GCCS Expansion\Concept 2 (IFB Rev0)\ | File Name: 1420152-01_GCCS_SITE PLAN.dwg

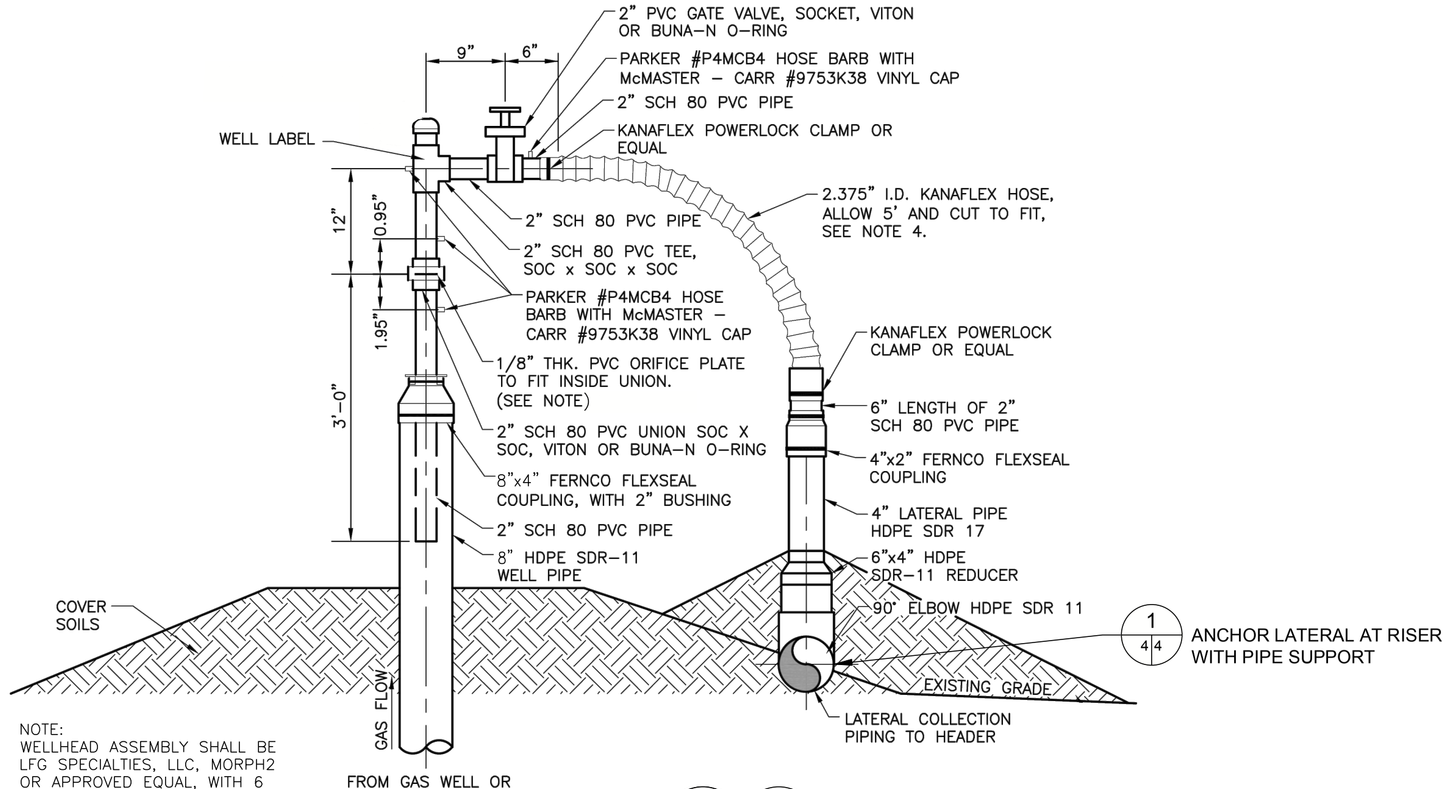

NOTE:
WELLHEAD ASSEMBLY SHALL BE LFG SPECIALTIES, LLC, MORPH2 OR APPROVED EQUAL, WITH 6 PVC ORIFICE PLATES, 0.4" TO 1.4". OWNER TO SPECIFY INITIAL ORIFICE SIZE.

SCALE: N.T.S. 1 1|3 1 2|3 LFG WELLHEAD DETAIL

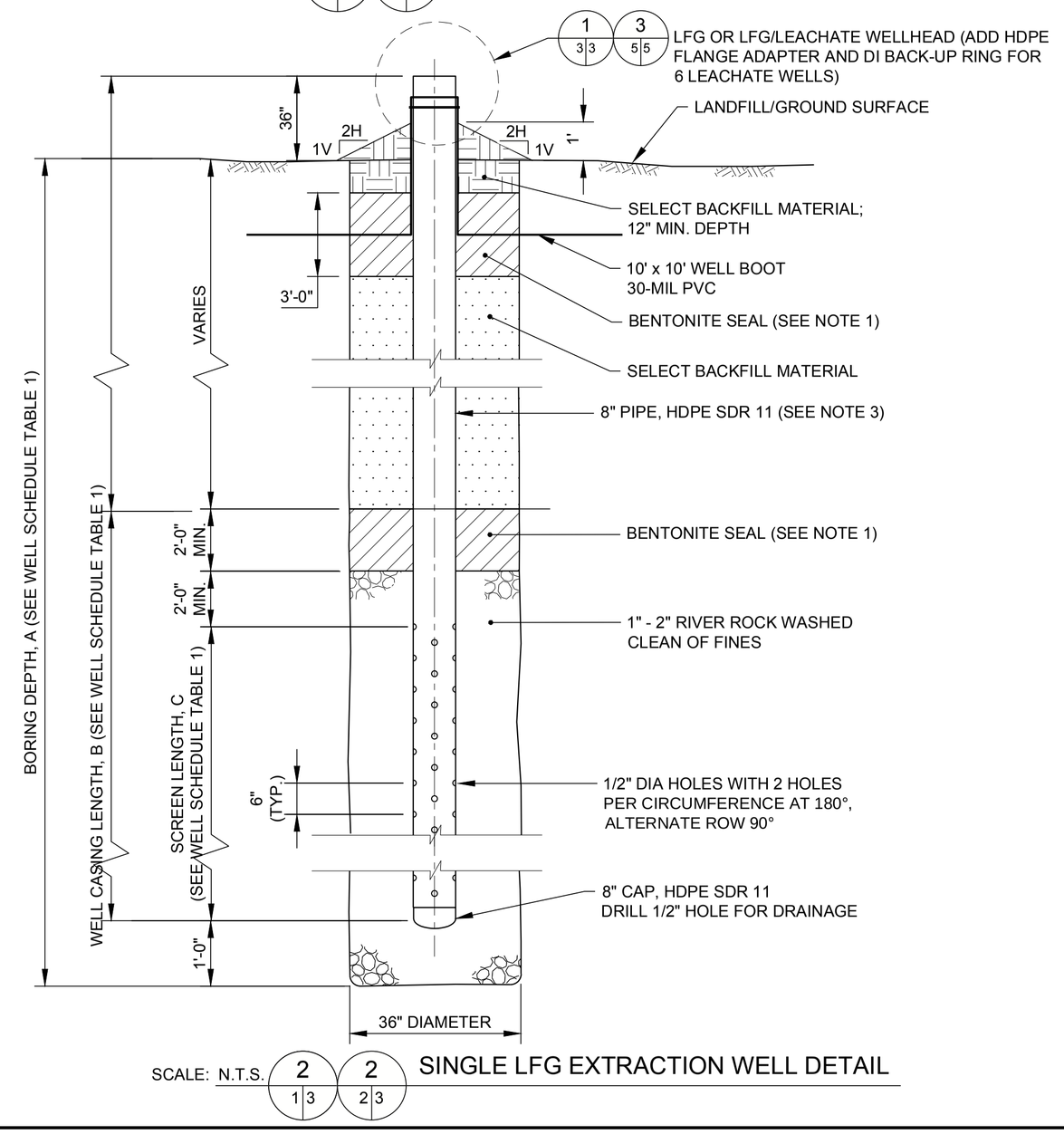

SCALE: N.T.S. 2 1|3 2 2|3 SINGLE LFG EXTRACTION WELL DETAIL

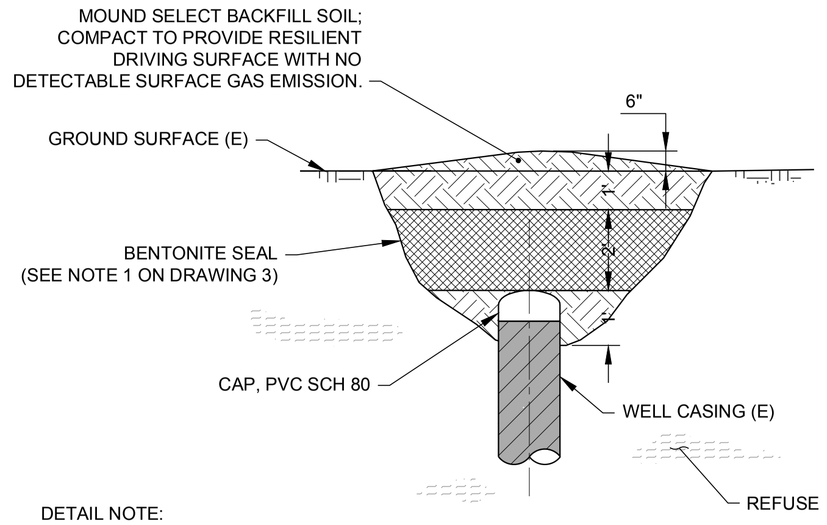

DETAIL NOTE:
CONTRACTOR SHALL FUSE HDPE CAP TO SEAL DECOMMISSIONED LATERAL AT EACH DECOMMISSIONED WELL (IF NOT IMMEDIATELY CONNECTED TO NEW WELL).

SCALE: N.T.S. 3 1|3 3 2|3 WELL DECOMISSIONING DETAIL

THE PROJECT WAS ORIGINALLY DESIGNED AND BID AS A REPLACEMENT OF THE BLOWER/FLARE STATION THAT INCLUDED REUSING SEVERAL COMPONENTS OF THE EXISTING FACILITIES AND 240 VAC MAIN POWER SUPPLY. THE CURRENT PROJECT, BIDDING PROCESS AND BID FORM IS BASED ON UPGRADING THE FACILITY TO USE 480 VAC POWER, REUSING VERY FEW AND SELECTED FACILITIES, AND USING A REVISED LAYOUT SHOWN ON SHEET 7A. ANY REFERENCES TO NEW 240 VAC EQUIPMENT IN THE PLANS OR SPECIFICATIONS ARE INTENDED TO BE 480 VAC.

NOTES

1. HYDRATED BENTONITE SEAL SHALL INCLUDE COARSE GRANULAR BENTONITE CHIPS (3/8" TO 3/4") AND FINE GRANULAR BENTONITE (8-MESH BAROID BENSEAL) PRE-MIXED AT RATIO 2:1 OR APPROVED EQUAL.

MINIMUM 60% BENTONITE TO MAXIMUM 40% WATER (BY VOLUME) AND POLYMER (CETCO INSTA-VIS PLUS OR APPROVED EQUAL) SHALL BE MIXED TO THICK SLURRY CONSISTENCY BEFORE PLACEMENT. DO NOT HYDRATE BENTONITE IN PLACE BY ADDING WATER DOWN THE BOREHOLE.

2. INSTALLED HDPE FITTINGS SHALL BE FULL PRESSURE RATED OR ONE SDR LOWER THAN HDPE PIPE SDR.
3. INSTALL ALL WELL CASINGS VERTICALLY PLUMB. USE SPRING CENTRALIZERS EVERY 20 FEET TO CENTER SINGLE WELL CASINGS IN THE BORE.
4. ALL LFG WELL LATERAL PIPES SHALL BE MINIMUM 6" DIAMETER, UNLESS NOTED OTHERWISE. CONTRACTOR SHALL PROVIDE ALL FITTINGS AND OTHER ACCESSORIES REQUIRED FOR PROPER CONNECTION OF ALL LATERALS TO WELLHEADS AND OTHER SYSTEM PIPING AS SHOWN ON THE PLAN DRAWINGS.

Rev.	YYYY-MM-DD	DESCRIPTION	PREPARED	DESIGN	REVIEW	APPROVED
0	2016-08-19	ISSUED FOR BIDDING	MAL	APW	APW	RVW

CLIENT
WESTERN PLACER WASTE MANAGEMENT AUTHORITY
3033 FIDDYMENT ROAD
ROSEVILLE, CA. 95747

CONSULTANT
GOLDER ASSOCIATES, INC.
425 LAKESIDE DRIVE
SUNNYVALE, CALIFORNIA 94085
USA
+[1] (408) 220-9223
www.golder.com

PROJECT
WESTERN REGIONAL SANITARY LANDFILL
2016 GCCS EXPANSION

TITLE
VERTICAL LFG EXTRACTION WELL DETAILS

PROJECT No. 1420152 | Rev. 0 | | DRAWING 3

Path: \\sacramento\acad\Sites\Western Regional LF\GVII_3D\1420152_GCCS Expansion\Concept 2 (IFB Rev0)\ | File Name: 1420152-00_GCCS_Piping Dets.dwg
0 1 in
IF THIS MEASUREMENT DOES NOT MATCH WHAT IS SHOWN, THE SHEET SIZE HAS BEEN MODIFIED FROM: ANSI D

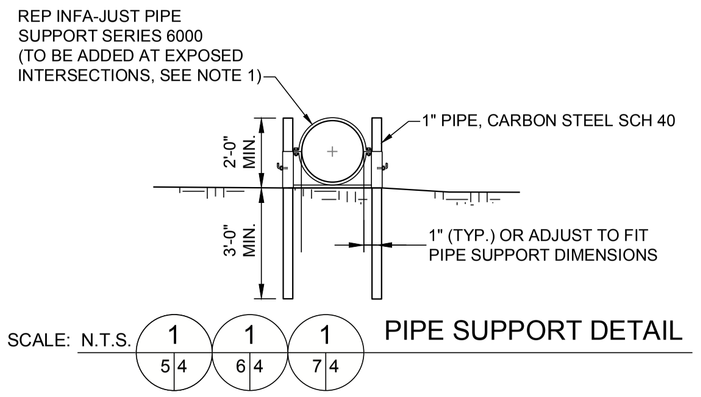

SCALE: N.T.S. 1 5|4 · 1 6|4 · 1 7|4 — PIPE SUPPORT DETAIL

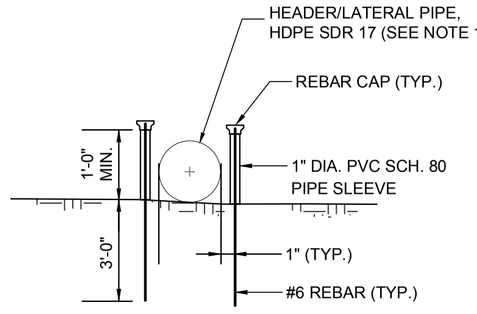

SCALE: N.T.S. 2 6|4 · 2 7|4 — PIPE GUIDE DETAIL

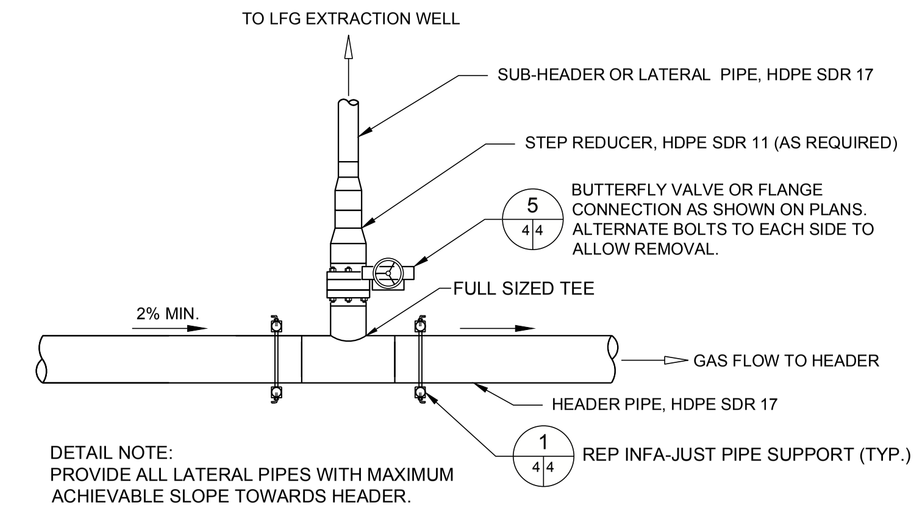

SCALE: N.T.S. 3 4|4 — TYPICAL SUB-HEADER/LATERAL TO ABOVE-GROUND HEADER CONNECTION DETAIL

NOTE(S)

1. CONTRACTOR TO SNAKE PIPE AND INSTALL PIPE GUIDES AT 20' SPACING ALONG ALL EXPOSED PIPE. CONTRACTOR TO INSTALL REP INFA-JUST PIPE ANCHORS AT WELLHEAD AND ON ALL PIPES >20' LONG AT EXPOSED PIPE JUNCTIONS. DO NOT INSTALL PIPE GUIDES, ANCHORS, SUPPORTS OR OTHER SURFACE PENETRATIONS IN FINAL COVER AREAS.
2. COORDINATE ALL TIE-INS TO EXISTING PIPING SYSTEMS WITH OWNER AND LFG SYSTEM OPERATOR TO MAINTAIN PERSONNEL SAFETY AND FACILITY REGULATORY COMPLIANCE, AND MINIMIZE OPERATIONAL DOWNTIME.
3. INSTALLED HDPE FITTINGS SHALL BE FULL PRESSURE RATED OR ONE SDR LOWER THAN HDPE PIPE SDR. NO SADDLE TEES ALLOWED FOR ABOVE GROUND HEADER/LATERAL CONNECTIONS. ELECTROFUSION SADDLE REDUCER TEE MAY BE PROPOSED FOR SUBSTITUTE TIE-IN TO EXISTING HEADER IF FULL SIZE TEE CANNOT BE INSTALLED. CONTRACTOR SHALL REQUEST PRIOR ENGINEER/OWNER APPROVAL FOR ALL PROPOSED ELECTROFUSION LOCATIONS.

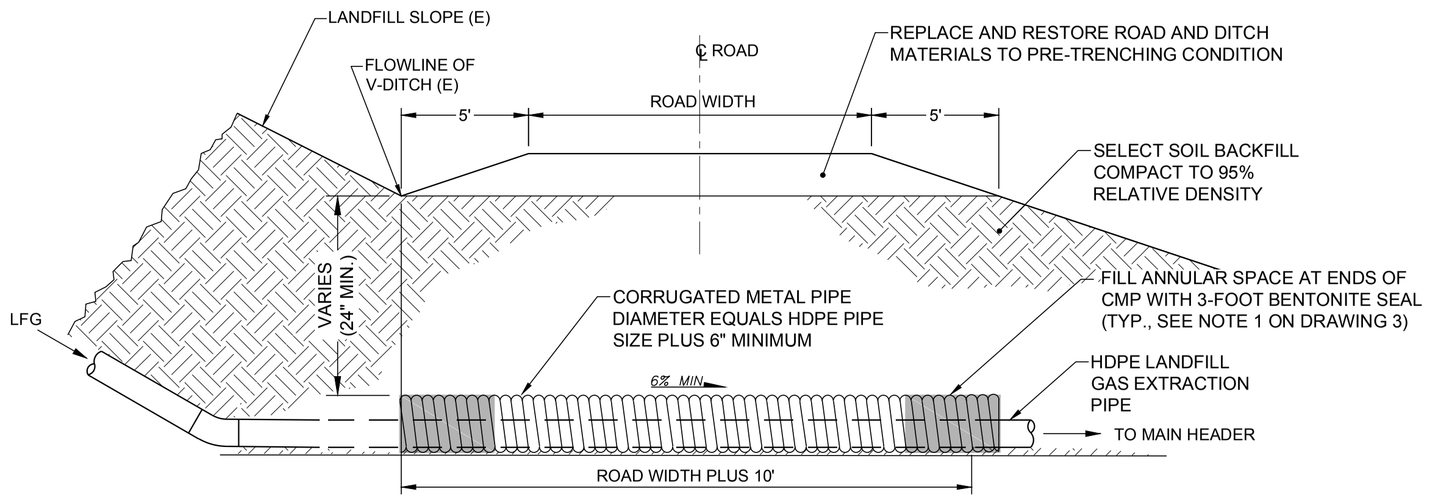

SCALE: N.T.S. 4 1|4 · 4 2|4 — ROAD CROSSING DETAIL

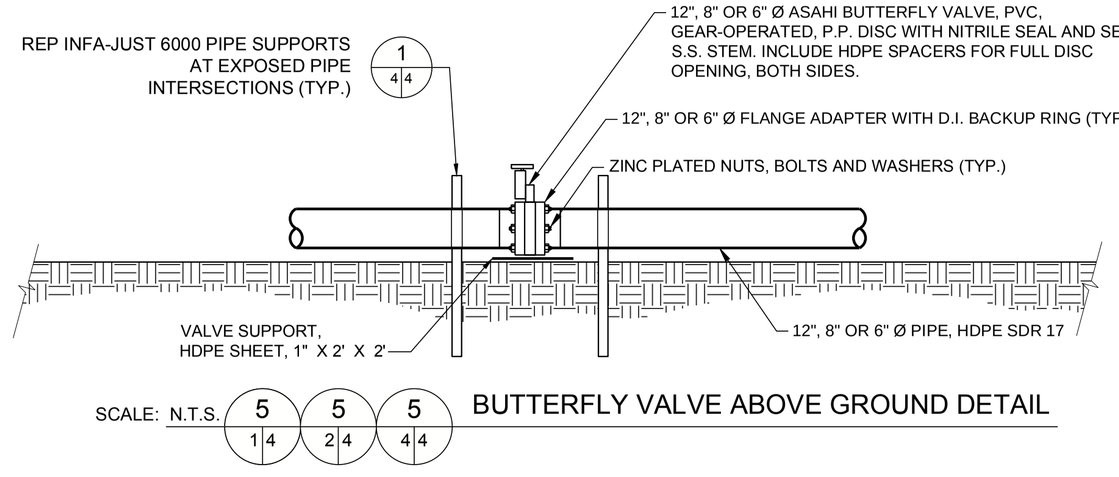

SCALE: N.T.S. 5 1|4 · 5 2|4 · 5 4|4 — BUTTERFLY VALVE ABOVE GROUND DETAIL

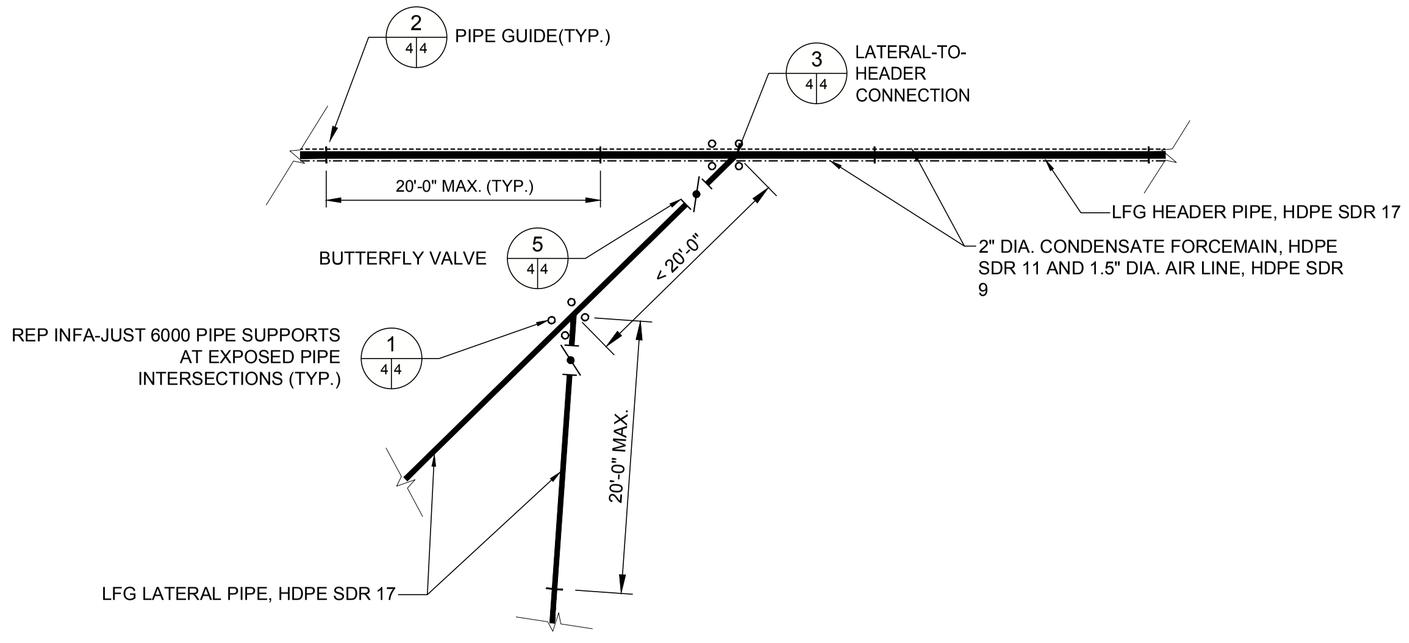

SCALE: N.T.S. 6 4|4 — HDPE PIPE GUIDE AND PIPE SUPPORT SPACING

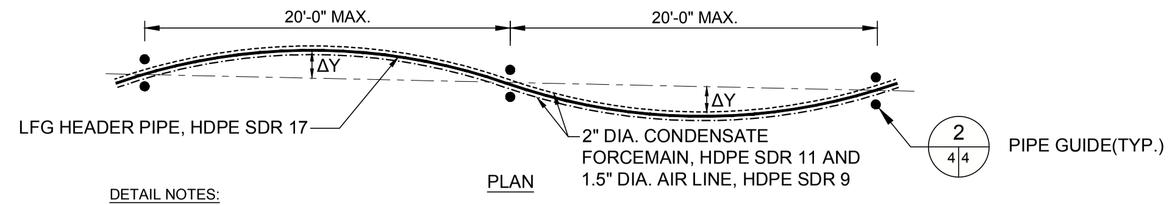

PLAN

DETAIL NOTES:

1. ΔY VARIES LINEARLY BETWEEN 0" TO 18" DEPENDING ON THE OUTSIDE TEMPERATURE (0" @ 60°F AND 18" @ 110°F).
2. DUE TO THERMAL EXPANSION AND CONTRACTION OF HDPE PIPE, LFG PIPE SHALL BE INSTALLED IN A SNAKED POSITION. CONTRACTOR SHALL MAKE ALLOWANCE FOR EXTRA LENGTH OF PIPE.
3. DO NOT INSTALL PIPE GUIDES, ANCHORS, SUPPORTS OR OTHER SURFACE PENETRATIONS IN FINAL COVER AREAS.

SCALE: N.T.S. 7 4|4 — HDPE PIPE SNAKING DETAIL

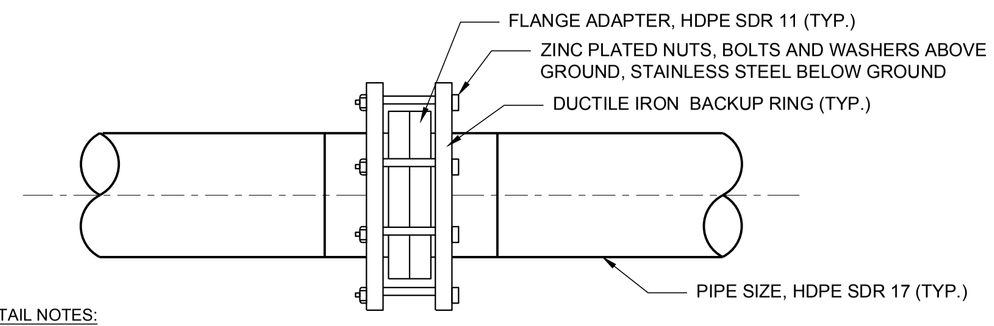

DETAIL NOTES:

1. COAT BOLT THREADS WITH BOSTIK NEVER-SEEZ.
2. TAPE 5 MIL PE AROUND ALL BURIED FLANGE CONNECTIONS.
3. BLIND FLANGE CONNECTION IS SIMILAR, WITH ONE SIDE AS DUCTILE IRON BLIND FLANGE.

SCALE: N.T.S. 8 4|4 — TYPICAL FLANGE CONNECTION

THE PROJECT WAS ORIGINALLY DESIGNED AND BID AS A REPLACEMENT OF THE BLOWER/FLARE STATION THAT INCLUDED REUSING SEVERAL COMPONENTS OF THE EXISTING FACILITIES AND 240 VAC MAIN POWER SUPPLY. THE CURRENT PROJECT, BIDDING PROCESS AND BID FORM IS BASED ON UPGRADING THE FACILITY TO USE 480 VAC POWER, REUSING VERY FEW AND SELECTED FACILITIES, AND USING A REVISED LAYOUT SHOWN ON SHEET 7A. ANY REFERENCES TO NEW 240 VAC EQUIPMENT IN THE PLANS OR SPECIFICATIONS ARE INTENDED TO BE 480 VAC.

Rev.	YYYY-MM-DD	DESCRIPTION	PREPARED	DESIGN	REVIEW	APPROVED
0	2016-08-19	ISSUED FOR BIDDING	MAL	APW	APW	RVW

CLIENT
WESTERN PLACER WASTE MANAGEMENT AUTHORITY
3033 FIDDYMENT ROAD
ROSEVILLE, CA. 95747

CONSULTANT
GOLDER ASSOCIATES, INC.
425 LAKESIDE DRIVE
SUNNYVALE, CALIFORNIA 94085
USA
+[1] (408) 220-9223
www.golder.com

PROJECT
WESTERN REGIONAL SANITARY LANDFILL
2016 GCCS EXPANSION

TITLE
LFG PIPING DETAILS

PROJECT No. 1420152 | Rev. 0 | | DRAWING 4

IF THIS MEASUREMENT DOES NOT MATCH WHAT IS SHOWN, THE SHEET SIZE HAS BEEN MODIFIED FROM: ANSI D

0 1 in

Path: \\sacramento\acad\Sites\Western Regional LF\CIVIL 3D\1420152_GCCS Expansion\Concept 2 (IFB Rev0)\ | File Name: 1420152-00_GCCS_Piping Dets.dwg

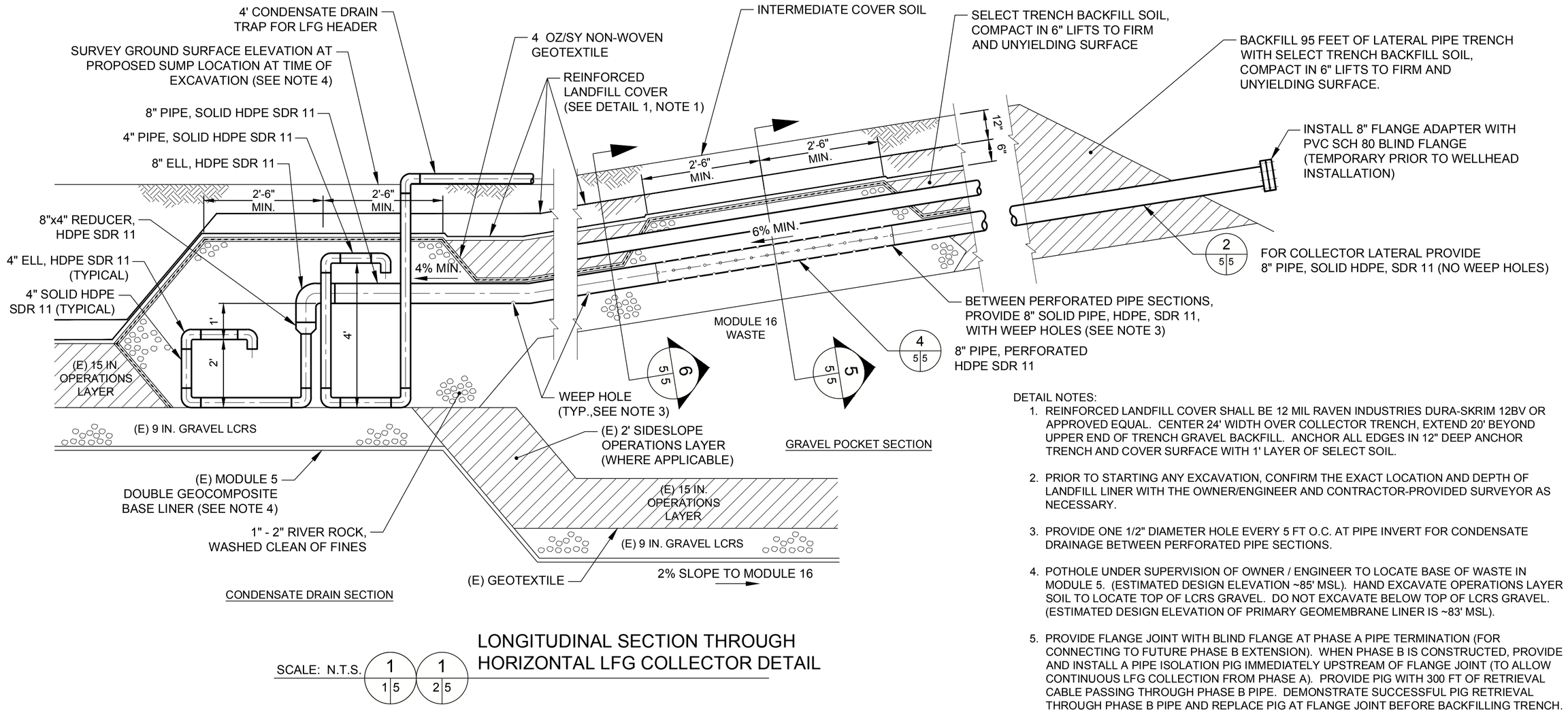

LONGITUDINAL SECTION THROUGH HORIZONTAL LFG COLLECTOR DETAIL

SCALE: N.T.S. 1 | 1 5 | 2 5

DETAIL NOTES:

1. REINFORCED LANDFILL COVER SHALL BE 12 MIL RAVEN INDUSTRIES DURA-SKRIM 12BV OR APPROVED EQUAL. CENTER 24' WIDTH OVER COLLECTOR TRENCH, EXTEND 20' BEYOND UPPER END OF TRENCH GRAVEL BACKFILL. ANCHOR ALL EDGES IN 12" DEEP ANCHOR TRENCH AND COVER SURFACE WITH 1' LAYER OF SELECT SOIL.
2. PRIOR TO STARTING ANY EXCAVATION, CONFIRM THE EXACT LOCATION AND DEPTH OF LANDFILL LINER WITH THE OWNER/ENGINEER AND CONTRACTOR-PROVIDED SURVEYOR AS NECESSARY.
3. PROVIDE ONE 1/2" DIAMETER HOLE EVERY 5 FT O.C. AT PIPE INVERT FOR CONDENSATE DRAINAGE BETWEEN PERFORATED PIPE SECTIONS.
4. POTHOLE UNDER SUPERVISION OF OWNER / ENGINEER TO LOCATE BASE OF WASTE IN MODULE 5. (ESTIMATED DESIGN ELEVATION ~85' MSL). HAND EXCAVATE OPERATIONS LAYER SOIL TO LOCATE TOP OF LCRS GRAVEL. DO NOT EXCAVATE BELOW TOP OF LCRS GRAVEL. (ESTIMATED DESIGN ELEVATION OF PRIMARY GEOMEMBRANE LINER IS ~83' MSL).
5. PROVIDE FLANGE JOINT WITH BLIND FLANGE AT PHASE A PIPE TERMINATION (FOR CONNECTING TO FUTURE PHASE B EXTENSION). WHEN PHASE B IS CONSTRUCTED, PROVIDE AND INSTALL A PIPE ISOLATION PIG IMMEDIATELY UPSTREAM OF FLANGE JOINT (TO ALLOW CONTINUOUS LFG COLLECTION FROM PHASE A). PROVIDE PIG WITH 300 FT OF RETRIEVAL CABLE PASSING THROUGH PHASE B PIPE. DEMONSTRATE SUCCESSFUL PIG RETRIEVAL THROUGH PHASE B PIPE AND REPLACE PIG AT FLANGE JOINT BEFORE BACKFILLING TRENCH.

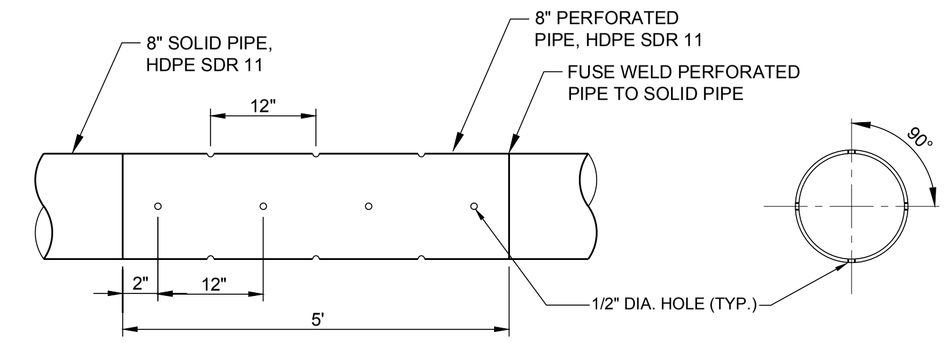

PERFORATED HORIZONTAL LFG COLLECTOR PIPING DETAIL

SCALE: N.T.S. 4 | 5 5

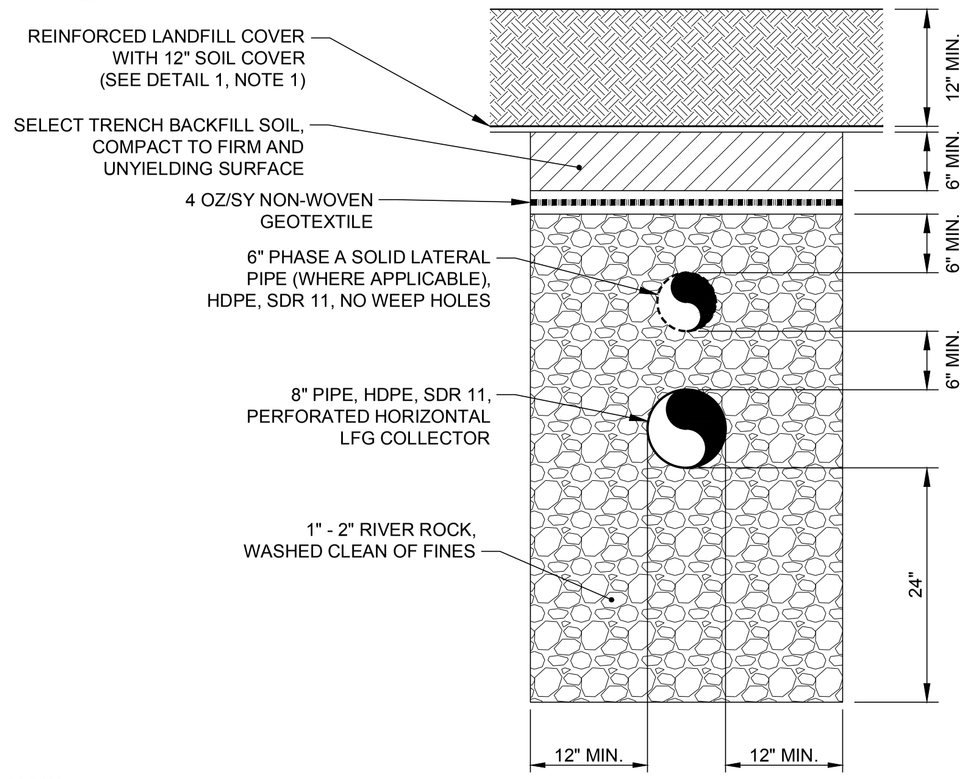

HORIZONTAL GAS COLLECTOR AT GRAVEL POCKET SECTION

SCALE: N.T.S. 5 | 5 5

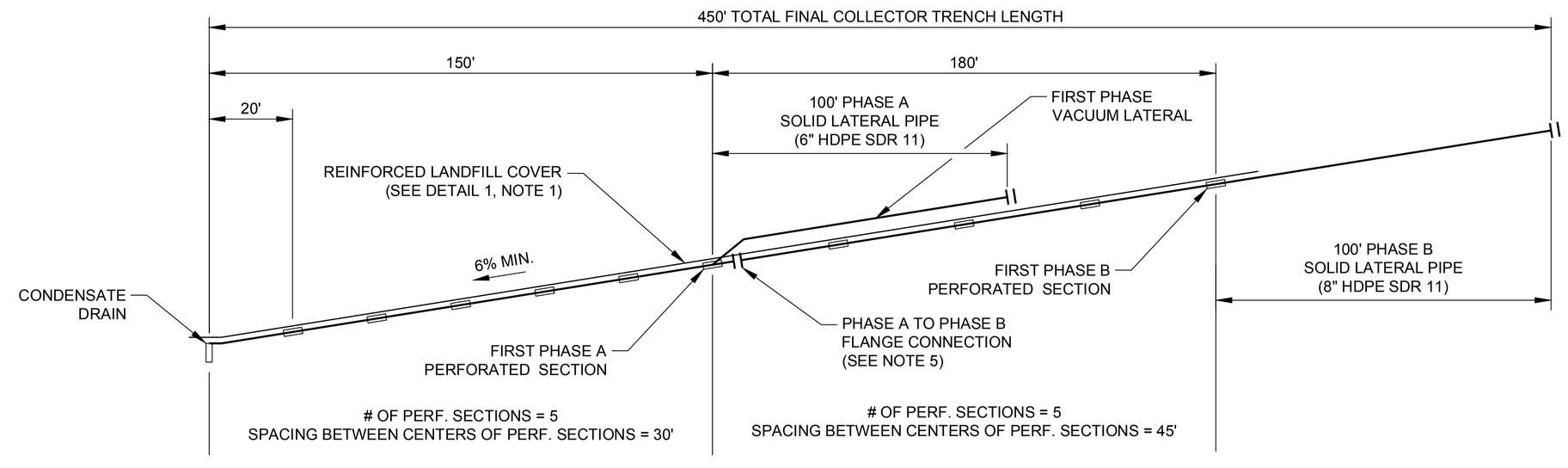

HORIZONTAL LFG COLLECTOR PERFORATION SPACING SCHEMATIC

SCALE: N.T.S. 2 | 5 5

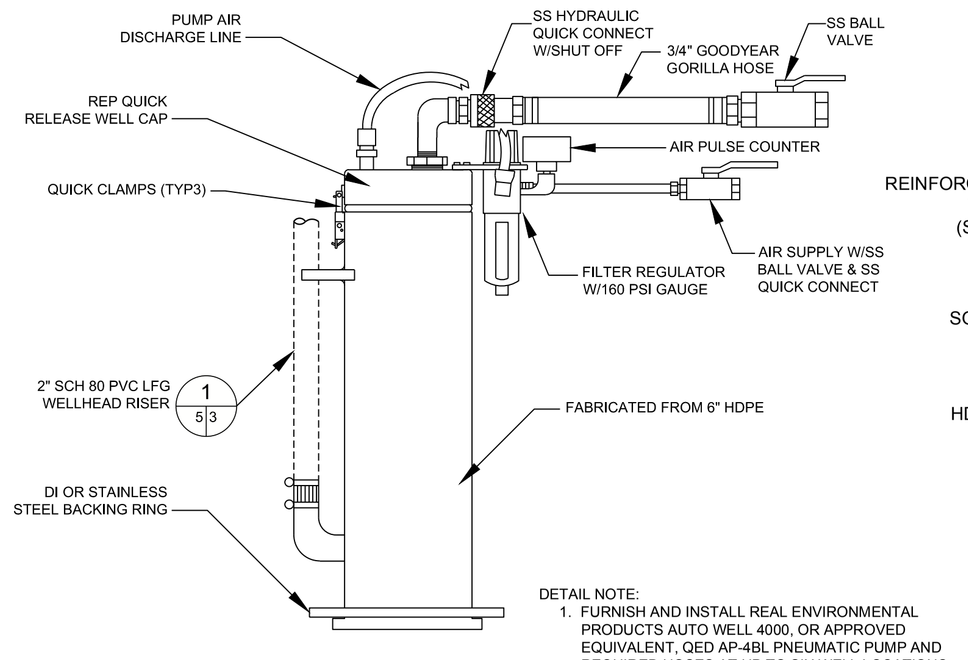

DETAIL NOTE:

1. FURNISH AND INSTALL REAL ENVIRONMENTAL PRODUCTS AUTO WELL 4000, OR APPROVED EQUIVALENT, QED AP-4BL PNEUMATIC PUMP AND REQUIRED HOSES AT UP TO SIX WELL LOCATIONS TO BE DETERMINED BY OWNER/ ENGINEER.

LFG/ LEACHATE WELLHEAD DETAIL

SCALE: N.T.S. 3 | 3 2 5 | 3 4 5

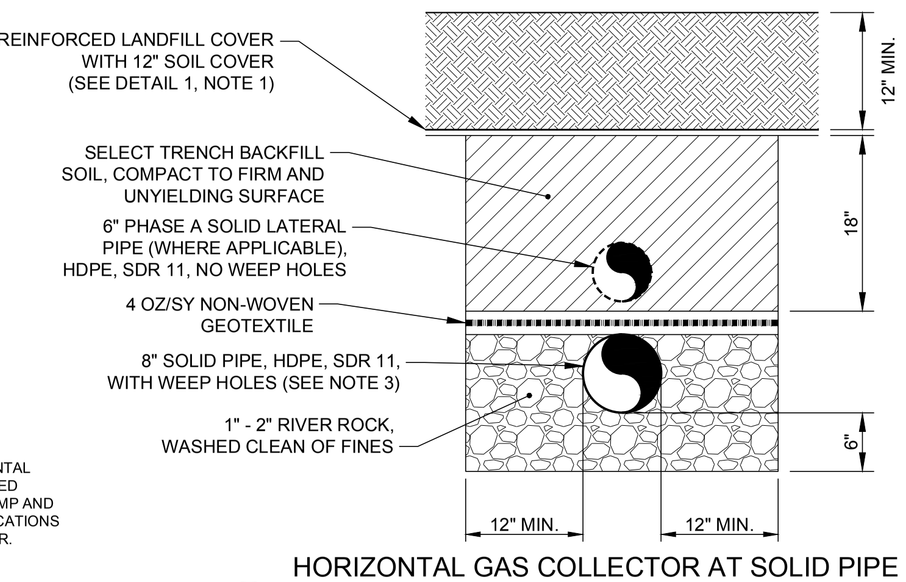

HORIZONTAL GAS COLLECTOR AT SOLID PIPE SECTION BETWEEN GRAVEL POCKETS

SCALE: N.T.S. 6 | 5 5

THE PROJECT WAS ORIGINALLY DESIGNED AND BID AS A REPLACEMENT OF THE BLOWER/FLARE STATION THAT INCLUDED REUSING SEVERAL COMPONENTS OF THE EXISTING FACILITIES AND 240 VAC MAIN POWER SUPPLY. THE CURRENT PROJECT, BIDDING PROCESS AND BID FORM IS BASED ON UPGRADING THE FACILITY TO USE 480 VAC POWER, REUSING VERY FEW AND SELECTED FACILITIES, AND USING A REVISED LAYOUT SHOWN ON SHEET 7A. ANY REFERENCES TO NEW 240 VAC EQUIPMENT IN THE PLANS OR SPECIFICATIONS ARE INTENDED TO BE 480 VAC.

Rev.	YYYY-MM-DD	DESCRIPTION	PREPARED	DESIGN	REVIEW	APPROVED
0	2016-08-19	ISSUED FOR BIDDING	MAL	APW	APW	RVW

CLIENT
WESTERN PLACER WASTE MANAGEMENT AUTHORITY
3033 FIDDYMENT ROAD
ROSEVILLE, CA. 95747

CONSULTANT
GOLDER ASSOCIATES, INC.
425 LAKESIDE DRIVE
SUNNYVALE, CALIFORNIA 94085
USA
+[1] (408) 220-9223
www.golder.com

PROJECT
WESTERN REGIONAL SANITARY LANDFILL
2016 GCCS EXPANSION

TITLE
HORIZONTAL LFG COLLECTION DETAILS

PROJECT No. 1420152 | Rev. 0 | 6 of 58 | DRAWING 5

IF THIS MEASUREMENT DOES NOT MATCH WHAT IS SHOWN, THE SHEET SIZE HAS BEEN MODIFIED FROM: ANSI D

0 1 in

Path: \\sacramento\acad\Sites\Western Regional LF\CIVIL 3D\1420152_GCCS Expansion\Concept 2 (IFB Rev0)\ | File Name: 1420152-00_GCCS_Piping Dets.dwg

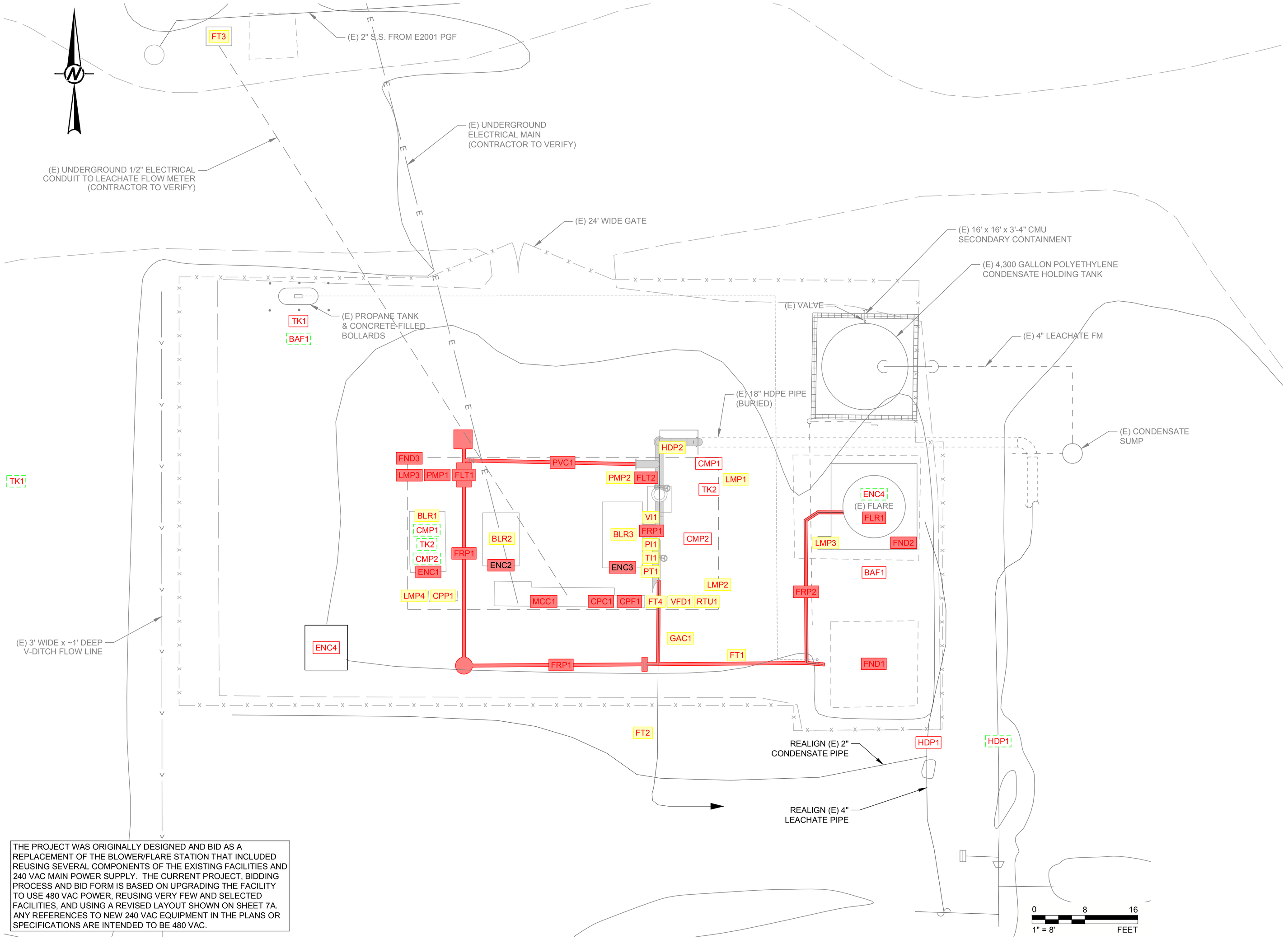

THE PROJECT WAS ORIGINALLY DESIGNED AND BID AS A REPLACEMENT OF THE BLOWER/FLARE STATION THAT INCLUDED REUSING SEVERAL COMPONENTS OF THE EXISTING FACILITIES AND 240 VAC MAIN POWER SUPPLY. THE CURRENT PROJECT, BIDDING PROCESS AND BID FORM IS BASED ON UPGRADING THE FACILITY TO USE 480 VAC POWER, REUSING VERY FEW AND SELECTED FACILITIES, AND USING A REVISED LAYOUT SHOWN ON SHEET 7A. ANY REFERENCES TO NEW 240 VAC EQUIPMENT IN THE PLANS OR SPECIFICATIONS ARE INTENDED TO BE 480 VAC.

LEGEND

- RETAIN IN-PLACE
- RE-LOCATE
- REMOVE AND PROVIDE TO OWNER
- REMOVE AND DISPOSE/ RECYCLE
- RELOCATION SITE

PROPOSED PROJECT DISPOSITION FOR SELECTED BLOWER FLARE STATION EQUIPMENT AND ITEMS

ITEM NO.	SIZE	DESCRIPTION	MEDIA	DISPOSITION WORK	FINAL LOCATION/ CONDITION
BAF1	4' SQ	Flare Air Inlet Baffle	n.a.	Relocate	East side air inlet of new flare
BLR1	25 HP	Perimeter blower #1	LFG	Remove and provide to Owner	
BLR2	25 HP	Perimeter blower #2	LFG	Remove and provide to Owner	
BLR3	75 HP	Infill blower #3	LFG	Remove and provide to Owner	
CMP1	15 HP	Air compressor #1	Air	Relocate	East side of new canopy area
CMP2	15 HP	Air compressor #2	Air	Relocate	East side of new canopy area
CPC1	n.a.	Condensate control panel	Elec.	Remove and dispose / recycle	
CPF1	n.a.	Flare control panel	Elec.	Remove and dispose / recycle	
CPP1	n.a.	Perimeter instrument control panel	Elec.	Remove and provide to Owner	
ENC1	n.a.	Blower #1 enclosure	n.a.	Remove and provide to Owner	
ENC2	n.a.	Blower #2 enclosure	n.a.	Remove and provide to Owner	
ENC3	n.a.	Blower #3 enclosure	n.a.	Remove and provide to Owner	
ENC4	n.a.	Tuff-Shed storage	n.a.	Relocate	South of condensate tank (door facing west)
FLR1	2,500 cfm	Enclosed flare	LFG	Remove and provide to Owner	Cut into 10' tall sections
FLT1	2,500 cfm	Perimeter entrainment filter	LFG	Remove and dispose / recycle	
FLT2	2,500 cfm	Infill entrainment filter	LFG	Remove and dispose / recycle	
FND1	13' x 13'	Flare foundation (south)	LFG	Remove and dispose / recycle	Backfill, regrade and re-pave
FND2	13' x 13'	Flare foundation (north)	LFG	Remove and dispose / recycle	Backfill, regrade and re-pave
FND3	23' x 50'	LFG equipment slab-on-grade	LFG	Remove and dispose / recycle	Backfill, regrade and re-pave
FRP1	12"	Pipe, perimeter, fiberglass reinforced	LFG	Remove and dispose / recycle	
FRP2	12"	Pipe, infill, fiberglass reinforced	LFG	Remove and dispose / recycle	
FT1	12"	Flare flow meter / transmitter	LFG	Remove and provide to Owner	
FT2	12"	PGF flow meter / transmitter	LFG	Remove and provide to Owner	
FT3	n.a.	Wastewater discharge flow meter	Leachate	Remove and provide to Owner	
FT4	12"	GCCS flow meter / transmitter	LFG	Remove and provide to Owner	
GAC1	n.a.	Gas analyzer	LFG	Remove and provide to Owner	
HDP1	4"	Pipe, HDPE	Cond.	Relocate	Align with BFS LFG infill headers
HDP2	12"	Pipe, infill, HDPE	LFG	Remove and provide to Owner	
LMP1	12'	Yard light	n.a.	Remove and provide to Owner	
LMP2	12'	Yard light	n.a.	Remove and provide to Owner	
LMP3	12'	Yard light	n.a.	Remove and provide to Owner	
LMP4	12'	Yard light	n.a.	Remove and provide to Owner	
LMP5	12'	Yard light	n.a.	Remove and provide to Owner	
MCC1	n.a.	Motor control center	Elec.	Remove and dispose / recycle	
PI1	n.a.	Pressure gauge	LFG	Remove and provide to Owner	
PMP1	n.a.	Perimeter filter pump, electric	Cond.	Remove and dispose / recycle	
PMP2	n.a.	Infill filter pump, diaphragm	Cond.	Remove and provide to Owner	
PT1	n.a.	Pressure sensor / transmitter	LFG	Remove and provide to Owner	
PVC1	12"	Pipe, crossover, polyvinyl chloride	LFG	Remove and dispose / recycle	
RTU1	n.a.	SCADA PLC panel	Elec.	Remove and provide to Owner	
TI1	n.a.	Temperature gauge	LFG	Remove and provide to Owner	
TK1	500 gal	Propane tank	Propane	Relocate	South of new electrical service
TK2	120 gal	Compressed air receiver	Air	Relocate	East side of new canopy area
VFD1	n.a.	Infill blower #3 variable drive	Elec.	Remove and provide to Owner	
VI1	n.a.	Vacuum gauge	LFG	Remove and provide to Owner	

NOTE(S)

1. BASE PLANS ARE FROM "BLOWER FLARE STATION LFG PIPING MODIFICATION PLAN", 6-18-09, GOLDER ASSOCIATES; AND "FLARE MODIFICATIONS", 5-09-05, SCS ENGINEERS (ORIGINAL CONDITIONS IN LAWRENCE AND ASSOCIATES, "GAS-EXTRACTION SYSTEM AS-BUILT PLANS", 1996).
2. P&ID 'TAGS' ARE ONLY USED FOR GENERAL ITEM IDENTIFICATION (AS REFERENCED IN THE TABLE ON DRAWING 11)
3. EQUIPMENT TYPE, LOCATIONS AND DIMENSIONS ARE BASED ON AVAILABLE INFORMATION PROVIDED TO THE ENGINEER. CONTRACTOR SHALL FIELD-VERIFY ALL APPLICABLE DATA AND DIMENSIONS BEFORE STARTING WORK.
4. THE ORDERS OF THE WORK ITEMS IN THESE TABLES OR DRAWINGS DO NOT IMPLY PRIORITY OR CHRONOLOGY. THE CONTRACTOR IS RESPONSIBLE FOR ASSESSING, EXECUTING AND COMPLETING THE SEQUENCE OF WORK SAFELY, EFFICIENTLY, AND IN COMPLIANCE WITH ALL REGULATORY AND OWNER REQUIREMENTS.
5. CONTRACTOR SHALL REMOVE, MODIFY OR RESTORE ALL EXISTING ITEMS REQUIRED FOR COMPLETION AND PROPER FUNCTIONING OF THE NEW EQUIPMENT IN ACCORDANCE WITH THE PLANS AND SPECIFICATIONS.
6. DISPOSITION OF MINOR INDIVIDUAL ITEMS (INCLUDING APPURTENANT CONDUIT, WIRING, VALVES AND FITTINGS) MAY NOT BE SPECIFICALLY LISTED OR SHOWN ON DRAWINGS. THE CONTRACTOR IS RESPONSIBLE FOR SAFE AND PROPER REMOVAL AND DISPOSITION OF ALL ITEMS NO LONGER REQUIRED AT THE COMPLETION OF THE PROJECT.
7. COORDINATE WITH THE OWNER WHO WILL FIELD MARK ALL ITEMS (BOTH LISTED ITEMS AND UNLISTED OR MINOR ITEMS) REQUIRED TO BE PROVIDED TO THE WPWMA UPON REMOVAL.
8. THE CONTRACTOR SHALL COORDINATE ALL SYSTEM INTERRUPTIONS WITH THE OWNER AND THE PGF, AND COMPLY WITH SYSTEM DOWNTIME RESTRICTIONS IN THE SPECIFICATIONS. THE CONTRACTOR SHALL IMPLEMENT ALL NECESSARY PROCEDURES FOR SAFE AND COMPLIANT SHUT-DOWN, MODIFICATION, AND START-UP, INCLUDING EQUIPMENT LOCK-OUT / TAG-OUT AND PIPING BLOCK / BLEED.

Rev.	YYYY-MM-DD	DESCRIPTION	PREPARED	DESIGN	REVIEW	APPROVED
0	2016-08-19	ISSUED FOR BIDDING	MAL	APW	APW	RVW

CLIENT
WESTERN PLACER WASTE MANAGEMENT AUTHORITY
3033 FIDDYMENT ROAD
ROSEVILLE, CA. 95747

CONSULTANT
GOLDER ASSOCIATES, INC.
425 LAKESIDE DRIVE
SUNNYVALE, CALIFORNIA 94085
USA
+[1] (408) 220-9223
www.golder.com

PROJECT
WESTERN REGIONAL SANITARY LANDFILL
2016 GCCS EXPANSION

TITLE
BLOWER/FLARE STATION EXISTING CONDITIONS/ DECOMMISSION PLAN

PROJECT No. 1420152 | Rev. 0 | 8 of 58 | DRAWING 6A

IF THIS MEASUREMENT DOES NOT MATCH WHAT IS SHOWN, THE SHEET SIZE HAS BEEN MODIFIED FROM: ANSI D

0 1 in

Path: \\sacramento\acad\Sites\Western Regional LF\CIVIL 3D\1420152_GCCS Expansion\Concept 2 (IFB Rev0)\ | File Name: 1418421_Final Equipment Layout Plan [Rev0].dwg

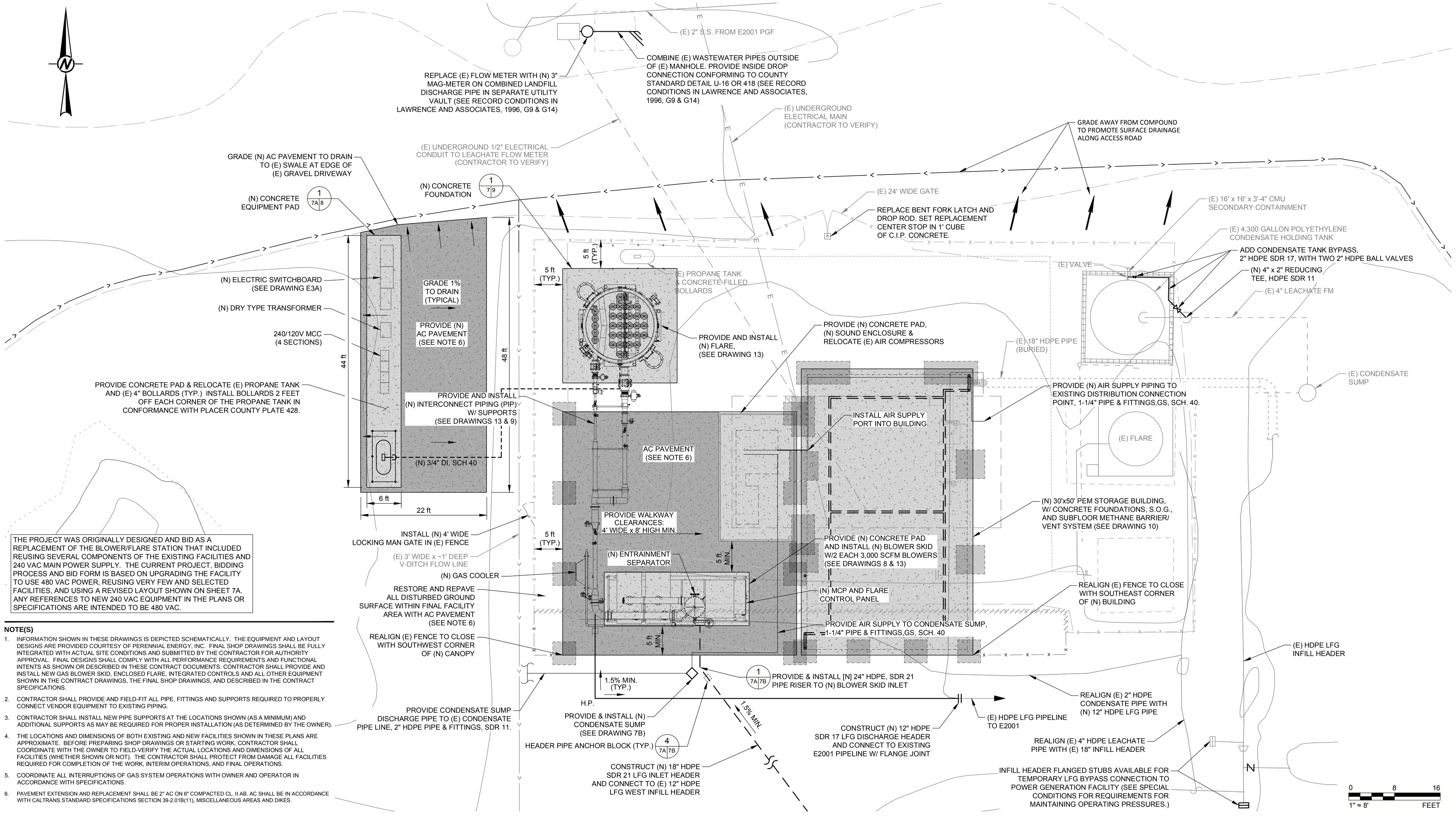

THE PROJECT WAS ORIGINALLY DESIGNED AND BID AS A REPLACEMENT OF THE BLOWER/FLARE STATION THAT INCLUDED REUSING SEVERAL COMPONENTS OF THE EXISTING FACILITIES AND 240 VAC MAIN POWER SUPPLY. THE CURRENT PROJECT, BIDDING PROCESS AND BID FORM IS BASED ON UPGRADING THE FACILITY TO USE 480 VAC POWER, REUSING VERY FEW AND SELECTED FACILITIES, AND USING A REVISED LAYOUT SHOWN ON SHEET 7A. ANY REFERENCES TO NEW 240 VAC EQUIPMENT IN THE PLANS OR SPECIFICATIONS ARE INTENDED TO BE 480 VAC.

NOTE(S)

1. INFORMATION SHOWN IN THESE DRAWINGS IS DEPICTED SCHEMATICALLY. THE EQUIPMENT AND LAYOUT DESIGNS ARE PROVIDED COURTESY OF PERENNIAL ENERGY, INC. FINAL SHOP DRAWINGS SHALL BE FULLY INTEGRATED WITH ACTUAL SITE CONDITIONS AND SUBMITTED BY THE CONTRACTOR FOR AUTHORITY APPROVAL. FINAL DESIGNS SHALL COMPLY WITH ALL PERFORMANCE REQUIREMENTS AND FUNCTIONAL INTENTS AS SHOWN OR DESCRIBED IN THESE CONTRACT DOCUMENTS. CONTRACTOR SHALL PROVIDE AND INSTALL NEW GAS BLOWER SKID, ENCLOSED FLARE, INTEGRATED CONTROLS AND ALL OTHER EQUIPMENT SHOWN IN THE CONTRACT DRAWINGS, THE FINAL SHOP DRAWINGS, AND DESCRIBED IN THE CONTRACT SPECIFICATIONS.
2. CONTRACTOR SHALL PROVIDE AND FIELD-FIT ALL PIPE, FITTINGS AND SUPPORTS REQUIRED TO PROPERLY CONNECT VENDOR EQUIPMENT TO EXISTING PIPING.
3. CONTRACTOR SHALL INSTALL NEW PIPE SUPPORTS AT THE LOCATIONS SHOWN (AS A MINIMUM) AND ADDITIONAL SUPPORTS AS MAY BE REQUIRED FOR PROPER INSTALLATION (AS DETERMINED BY THE OWNER).
4. THE LOCATIONS AND DIMENSIONS OF BOTH EXISTING AND NEW FACILITIES SHOWN IN THESE PLANS ARE APPROXIMATE. BEFORE PREPARING SHOP DRAWINGS OR STARTING WORK, CONTRACTOR SHALL COORDINATE WITH THE OWNER TO FIELD-VERIFY THE ACTUAL LOCATIONS AND DIMENSIONS OF ALL FACILITIES (WHETHER SHOWN O/R NOT). THE CONTRACTOR SHALL PROTECT FROM DAMAGE ALL FACILITIES REQUIRED FOR COMPLETION OF THE WORK, INTERIM OPERATIONS, AND FINAL OPERATIONS.
5. COORDINATE ALL INTERRUPTIONS OF GAS SYSTEM OPERATIONS WITH OWNER AND OPERATOR IN ACCORDANCE WITH SPECIFICATIONS.
6. PAVEMENT EXTENSION AND REPLACEMENT SHALL BE 2" AC ON 6" COMPACTED CL. II AB. AC SHALL BE IN ACCORDANCE WITH CALTRANS STANDARD SPECIFICATIONS SECTION 39-2.01B(11), MISCELLANEOUS AREAS AND DIKES.

Rev.	YYYY-MM-DD	DESCRIPTION	PREPARED	DESIGN	REVIEW	APPROVED
0	2016-08-19	ISSUED FOR BIDDING	MAL	APW	APW	RVW

CLIENT
WESTERN PLACER WASTE MANAGEMENT AUTHORITY
3033 FIDDYMENT ROAD
ROSEVILLE, CA. 95747

CONSULTANT
GOLDER ASSOCIATES, INC.
425 LAKESIDE DRIVE
SUNNYVALE, CALIFORNIA 94085
USA
+[1] (408) 220-9223
www.golder.com

PROJECT
WESTERN REGIONAL SANITARY LANDFILL
2016 GCCS EXPANSION

TITLE
BLOWER/ FLARE
STATION CONCEPTUAL SITE PLAN

PROJECT No. 1420152 | Rev. 0 | 10 of 58 | DRAWING 7A

Path: \\sacramento\acad\Sites\Western Regional LF\CIVIL 3D\1420152_GCCS Expansion\Concept 2 (IFB Rev0)\ | File Name: 1418421_Final Equipment Layout Plan (Rev0).dwg
IF THIS MEASUREMENT DOES NOT MATCH WHAT IS SHOWN, THE SHEET SIZE HAS BEEN MODIFIED FROM: ANSI D
0 1 in

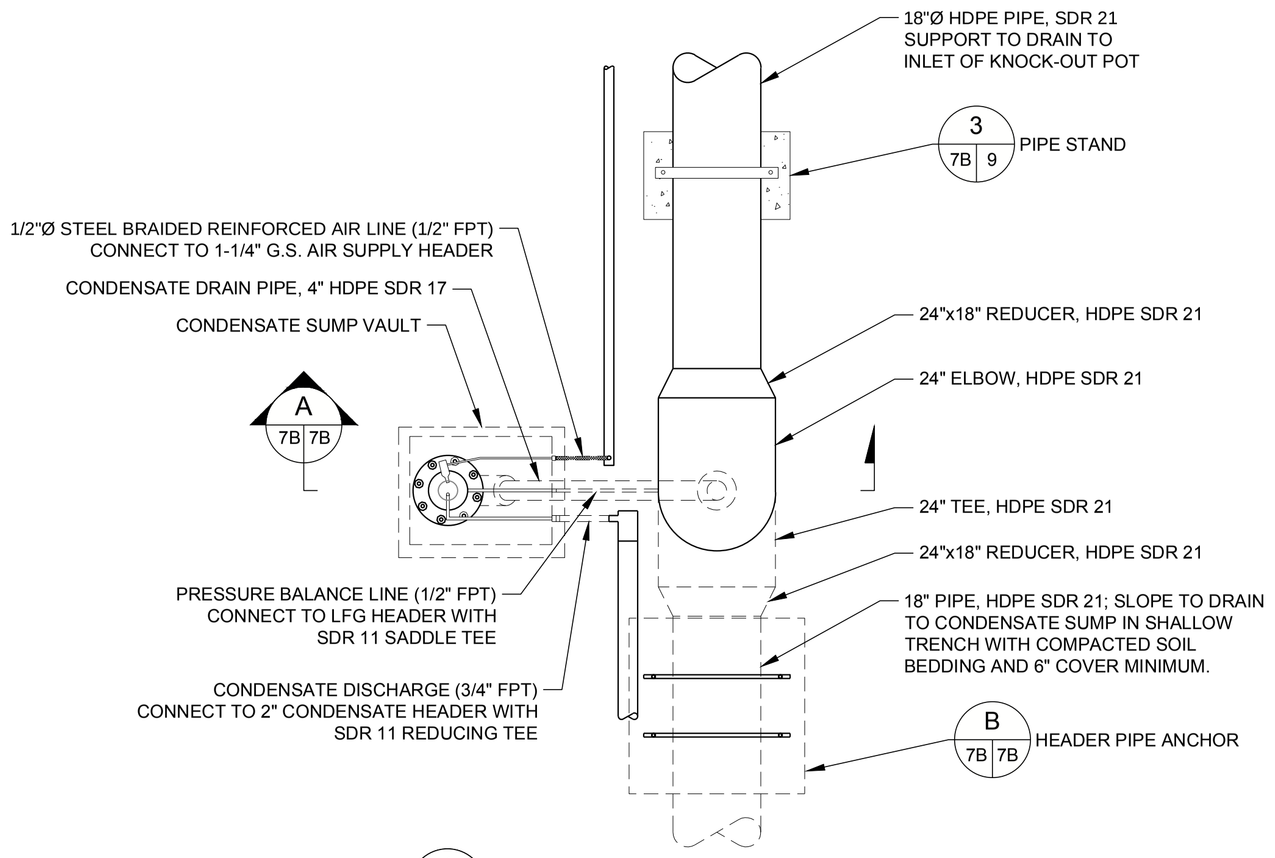

N.T.S. 1 (7A 7B) CONDENSATE SUMP INSTALLATION

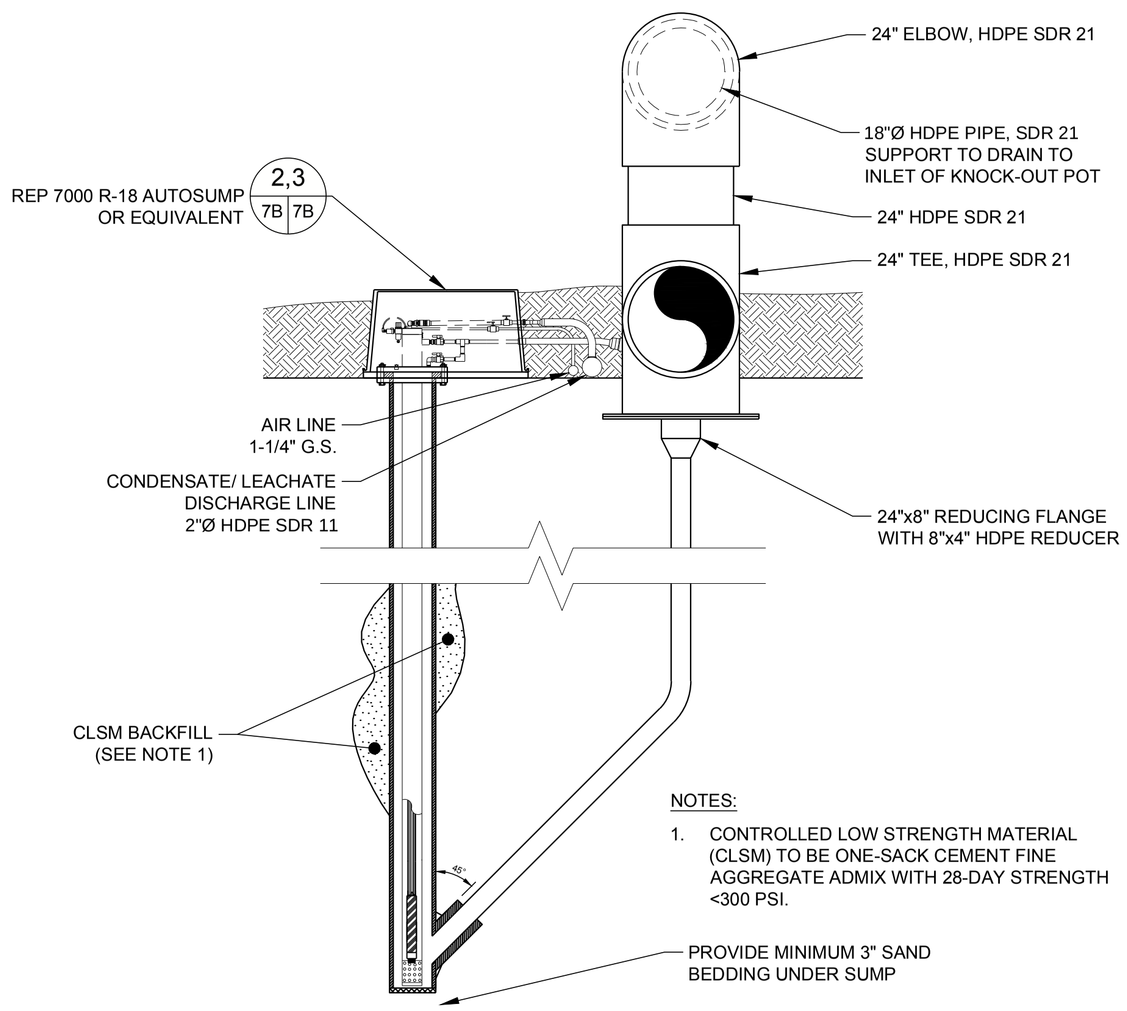

NOTES:

1. CONTROLLED LOW STRENGTH MATERIAL (CLSM) TO BE ONE-SACK CEMENT FINE AGGREGATE ADMIX WITH 28-DAY STRENGTH <300 PSI.

N.T.S. A (7B 7B) CONDENSATE SUMP SECTION

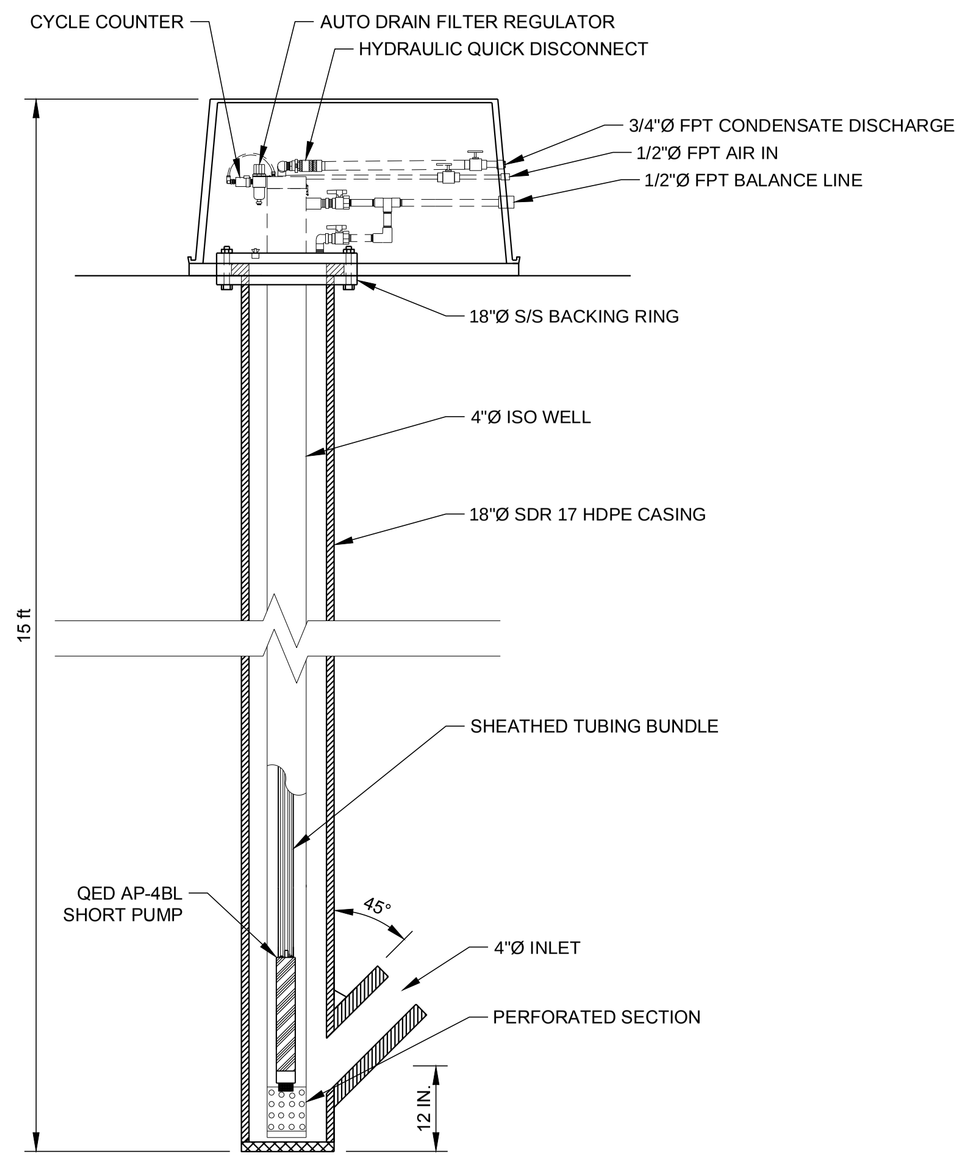

N.T.S. 2 (7B 7B) CONDENSATE SUMP

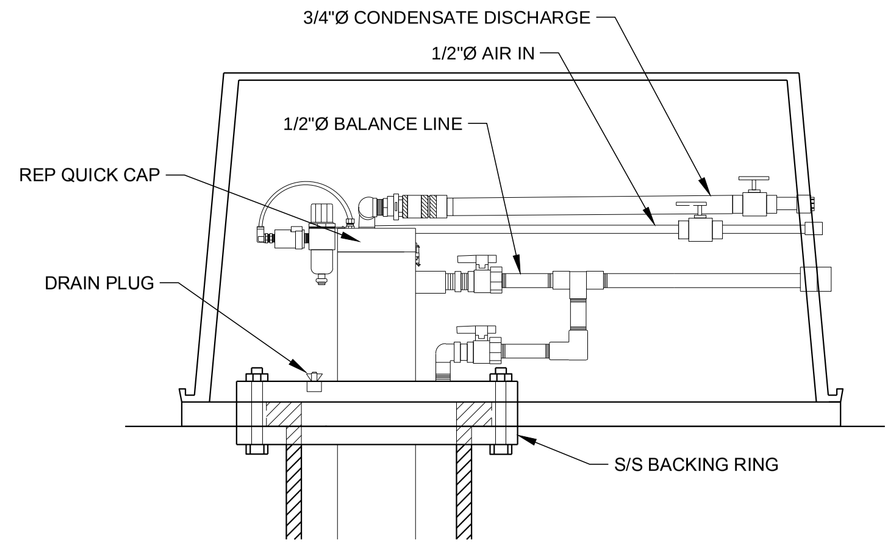

N.T.S. 3 (7B 7B) CONDENSATE SUMP

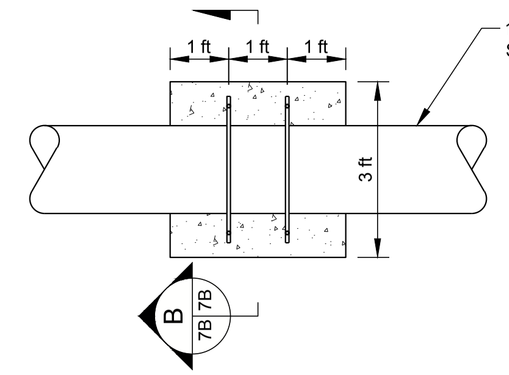

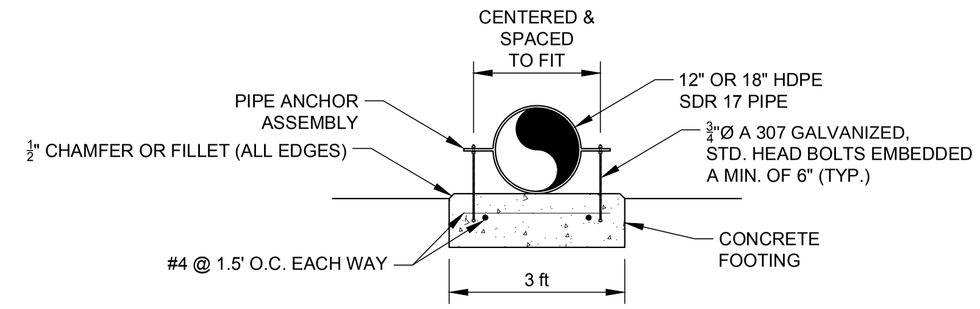

N.T.S. B (7B 7B) HEADER PIPE ANCHOR BLOCK DETAIL

THE PROJECT WAS ORIGINALLY DESIGNED AND BID AS A REPLACEMENT OF THE BLOWER/FLARE STATION THAT INCLUDED REUSING SEVERAL COMPONENTS OF THE EXISTING FACILITIES AND 240 VAC MAIN POWER SUPPLY. THE CURRENT PROJECT, BIDDING PROCESS AND BID FORM IS BASED ON UPGRADING THE FACILITY TO USE 480 VAC POWER, REUSING VERY FEW AND SELECTED FACILITIES, AND USING A REVISED LAYOUT SHOWN ON SHEET 7A. ANY REFERENCES TO NEW 240 VAC EQUIPMENT IN THE PLANS OR SPECIFICATIONS ARE INTENDED TO BE 480 VAC.

Rev.	YYYY-MM-DD	DESCRIPTION	PREPARED	DESIGN	REVIEW	APPROVED
0	2016-08-19	ISSUED FOR BIDDING	MAL	APW	APW	RVW

CLIENT
WESTERN PLACER WASTE MANAGEMENT AUTHORITY
3033 FIDDYMENT ROAD
ROSEVILLE, CA. 95747

CONSULTANT
GOLDER ASSOCIATES, INC.
425 LAKESIDE DRIVE
SUNNYVALE, CALIFORNIA 94085
USA
+[1] (408) 220-9223
www.golder.com

PROJECT
WESTERN REGIONAL SANITARY LANDFILL
2016 GCCS EXPANSION

TITLE
CONDENSATE DETAILS

PROJECT No. 1420152 | Rev. 0 | 11 of 58 | DRAWING 7B

Path: \\sacramento\acad\Sites\Western Regional LF\CIVIL 3D\1420152_GCCS Expansion\Concept 2 (IFB Rev0)\ | File Name: 1418421_Final Equipment Layout Plan [Rev0].dwg
IF THIS MEASUREMENT DOES NOT MATCH WHAT IS SHOWN, THE SHEET SIZE HAS BEEN MODIFIED FROM: ANSI D
0 1 in

GENERAL NOTES

G1. THE CONTRACT CONCRETE DRAWINGS AND SPECIFICATIONS REPRESENT THE FINISHED STRUCTURE. THEY DO NOT INDICATE THE METHOD OR SEQUENCES OF CONSTRUCTION. THE CONTRACTOR SHALL PROVIDE ALL NECESSARY MEASURES TO PROTECT THE STRUCTURE DURING CONSTRUCTION. SUCH MEASURES SHALL INCLUDE, BUT NOT BE LIMITED TO, BRACING AND SHORING OF LOADS DUE TO CONSTRUCTION EQUIPMENT, BACKFILL AND WIND.

G2. THE CONTRACTOR SHALL ALSO ASSUME RESPONSIBILITY AND PROVIDE ALL NECESSARY SAFETY PRECAUTIONS METHODS, TECHNIQUES, SEQUENCES OR PROCEDURES REQUIRED TO PERFORM THE WORK IN ACCORDANCE WITH OSHA, OWNER AND OTHER AGENCY REGULATIONS.

G3. IMMEDIATELY NOTIFY THE ENGINEER WHEN EMBEDDED ITEMS ARE FOUND TO CONFLICT WITH FORM FRAMEWORK, REINFORCING STEEL, OR OTHER EMBEDMENTS. THE ENGINEER SHALL SPECIFY MEASURES TO CORRECT THE CONFLICT.

G4. ANY FABRICATION OR CONSTRUCTION DONE PRIOR TO APPROVAL OF DRAWINGS WILL BE DONE AT THE CONTRACTORS RISK AND ANY REMEDIES TO CORRECT ANY WORK DONE PRIOR TO APPROVAL WILL BE AT THE CONTRACTOR'S EXPENSE. THE CONTRACTOR SHALL PROVIDE AS-BUILT DRAWINGS SHOWING LAYOUT OF STEEL REINFORCEMENT, ANCHORAGE AND EMBEDMENTS FOR ALL DEVIATIONS FROM CONTRACT DRAWINGS.

EXISTING CONDITIONS: CONTRACTOR SHALL EXAMINE ALL ELEVATIONS AND DIMENSIONS FOR EXISTING CONDITIONS IN THE FIELD BEFORE PROCEEDING. CONTRACTOR SHALL NOTIFY THE CONSTRUCTION MANAGER OF ANY DISCREPANCIES OR FIELD CHANGES PRIOR TO INSTALLATION OR FABRICATION. IN CASE OF DISCREPANCIES BETWEEN THE EXISTING CONDITIONS AND THE DRAWINGS, THE CONTRACTOR SHALL OBTAIN DIRECTIONS FROM THE CONSTRUCTION MANAGER BEFORE PRECEDING. DIMENSIONS NOTED AS PLUS OR MINUS (±) INDICATE UNVERIFIED DIMENSIONS AND ARE APPROXIMATE. NOTIFY CONSTRUCTION MANAGER IMMEDIATELY OF CONFLICT OR EXCESSIVE VARIATIONS FORM INDICATED DIMENSIONS. DO NOT SCALE DRAWINGS.

FOUNDATION GENERAL NOTES

F1. FOUNDATIONS SHALL BE CONSTRUCTED TO THE DIMENSIONS AS SHOWN ON THE STRUCTURAL DRAWINGS.

F2. NO STRUCTURAL CONCRETE SHALL BE POURED IN THE FOOTING OR SLAB EXCAVATIONS CONTAINING WATER.

F3. FLOW FILL CONCRETE (3000 PSI MINIMUM) MAY BE USED TO LEVEL GRADE BELOW FOOTINGS AND SLABS UPON APPROVAL OF THE DESIGN ENGINEER.

F3. EXCAVATION SHALL NOT ENCROACH BEYOND A 45° LINE EXTENDING FROM THE TOE OF AN EXISTING STRUCTURE/EQUIPMENT FOOTING.

CONCRETE GENERAL NOTES

C1. PRIOR TO PLACING CONCRETE, CONTRACTOR SHALL VERIFY THE REQUIREMENTS FOR ALL MECHANICAL AND ELECTRICAL SERVICES FOR THE LOCATION OF EMBEDDED ITEMS: (HOLES, UTILITIES, AND OTHERS).

C2. MATERIAL FORMING, PLACING, FINISHING AND CURING SHALL BE IN ACCORDANCE WITH THE REQUIREMENTS OF ACI 318 SPECIFICATION.

C3. ALL CONCRETE SHALL HAVE A MINIMUM COMPRESSIVE STRENGTH (f'c) OF 4000 PSI AT THE AGE OF 28 DAYS.

C4. REINFORCING BARS SHALL BE DEFORMED BARS AND SHALL CONFORM TO ASTM A615, GRADE 60, EXCEPT AS NOTED.

C5. PROVIDE BAR SUPPORTS AND SPACERS TO PLACE ALL BARS IN PROPER LOCATION, AND WIRE ADEQUATELY AT INTERSECTIONS TO HOLD BARS FIRMLY IN POSITION WHILE CONCRETE IS PLACED.

C6. CONTINUOUS BARS SHALL LAP AND DOWELS SHALL PROJECT ADEQUATELY TO PROVIDE A CLASS B SPLICE IN ACCORDANCE WITH ACI 318 CHAPTER 12.

C7. FOR REINFORCED CONCRETE, UNLESS NOTED OTHERWISE ON THE DESIGN DRAWINGS CLASS B SPLICE IS DEFINED AS 1.3 Ld.
ALL LAPS ARE TENSION SPLICES, UNLESS OTHERWISE NOTED ON THE DRAWINGS.
"TOP BARS" ARE HORIZONTAL BARS WITH MORE THAN 12" OF FRESH CONCRETE CAST BELOW THE BARS.

REINFORCING BAR SPLICE LENGTH SCHEDULE FOR GRADE 60, UNCOATED, AND FOR (f'c) OF 4000 PSI			
BAR SIZE	TENSION SPLICE LENGTH=1.3ld		COMPRESSION SPLICE LENGTH
	TOP BARS	OTHER BARS	
#4	32"	25"	15"
#5	40"	31"	19"
#6	48"	37"	23"

C8. DO NOT SPLICE AT MAXIMUM STRESS LOCATIONS.

C9. THE CONCRETE MIX DESIGN SHALL BE AS FOLLOWS UNLESS OTHERWISE SHOWN ON THE DESIGN DRAWINGS:

f'c-28 DAY DESIGN COMPRESSION STRENGTH	MAXIMUM AGGREGATE SIZE	SLUMP AT POINT OF PLACEMENT	AIR ENTRAINED PERCENT (±1%)	MAXIMUM WATER/CEMENT RATIO
4000 psi	3/4"	4"	4-6.0	0.5

C10. CONCRETE COVER FOR REINFORCEMENT (UNLESS OTHERWISE NOTED):
A. CONCRETE POURED AGAINST EARTH ..... 3"
B. CONCRETE POURED IN FORMS BUT EXPOSED TO WEATHER OR EARTH
(1.) #5 BARS OR SMALLER..... 1 1/2"
(2.) BARS LARGER THAN #5..... 2"

C11. ALL REINFORCING BAR HOOKS SHALL BE STANDARD HOOKS, UNLESS NOTED OTHERWISE.

GENERAL STRUCTURAL STEEL NOTES

SI1. THIS SPECIAL INSPECTION PROGRAM IS PROVIDED IN CONFORMANCE WITH CBC SECTION 1704.

SI2. THE ITEMS CHECKED WITH AN "X" IN THE "SPECIAL INSPECTION SCHEDULE" SHALL BE INSPECTED IN ACCORDANCE WITH CBC CHAPTER 17 BY A CERTIFIED SPECIAL INSPECTOR. A CERTIFIED TESTING AGENCY SHALL COMPLETE MATERIAL SAMPLING AND TESTING REQUIREMENTS. THE SPECIAL INSPECTOR AND TESTING AGENCY SHALL FURNISH REPORTS TO THE ENGINEER OF RECORD AND CONTRACTOR, FOR EACH TEST OR REPORT. ALL DISCREPANCIES SHALL BE BROUGHT TO THE IMMEDIATE ATTENTION OF THE CONTRACTOR FOR CORRECTION. IF DISCREPANCIES ARE NOT CORRECTED, ALL REMANDING DISCREPANCIES SHALL BE CLEARLY SHOWN ON THE REPORT, WITH A RECORD OF THE UNCORRECTED ITEMS. THE REPORT SHALL BE IMMEDIATELY FURNISHED TO THE ENGINEER OF RECORD AND CONTRACTOR AFTER EACH TEST RESULT OR INSPECTION. SPECIAL INSPECTION TESTING REQUIREMENTS APPLY EQUALLY TO ALL BIDDER DESIGNED COMPONENTS. THE SPECIAL INSPECTOR SHALL BE EMPLOYED BY THE OWNER, ENGINEER OF RECORD, OR THE AGENT OF THE OWNER, BUT NOT CONTRACTOR OR ANY OTHER PERSON RESPONSIBLE FOR THE WORK. THE CONTRACTOR SHALL BE RESPONSIBLE FOR CONTACTING THE SPECIAL INSPECTOR AND SCHEDULING ANY SPECIAL INSPECTION, WITHIN THE SCHEDULING REQUIREMENTS OF THE TESTING AGENCY OR SPECIAL INSPECTOR.

SI3. CONTINUOUS SPECIAL INSPECTION MEANS THAT THE SPECIAL INSPECTOR IS ON THE SITE AT ALL THE TIMES OBSERVING THE WORK REQUIRING INSPECTION. PERIODIC SPECIAL INSPECTION MEANS THAT THE SPECIAL INSPECTOR IS ON THE SITE AT THE TIME INTERVALS NECESSARY TO CONFORM THAT ALL WORK REQUIRING SPECIAL INSPECTION IS IN COMPLIANCE.

SI4. INSPECTION OF CONCRETE SHALL BE IN ACCORDANCE WITH CBC SECTION 1705.3. THE CONCRETE CONSTRUCTION SHALL BE INSPECTED FOR COMPLIANCE WITH APPROVED CONSTRUCTION DOCUMENTS.

SI5 CONCRETE: MAKE ONE SET OF FOUR CYLINDERS OF MIXED AND PLACED CONCRETE. AS A MINIMUM, ONE SET SHALL BE TAKEN AT LEAST ONCE IN THE FIELD FOR EACH DAY, FOR EVERY 150 CUBIC YARDS OF CONCRETE, OR FOR EVERY 5000 FT2 OF SURFACE AREA OF SLABS AND WALLS.
CURE THE CYLINDERS IN THE FIELD FOR THREE DAYS IN THE SAME MANNER AS THE PLACED CONCRETE. AFTER THREE DAYS, TRANSPORT TO THE TESTING LABORATORY FOR COMPRESSIVE STRENGTH TESTING. PER SET, TEST ONE CYLINDER AT SEVEN DAYS AND TWO AT TWENTY-EIGHT DAYS. THE FINAL CYLINDER SHALL BE TESTED AT DISCRETION OF THE CONTRACTOR.

SPECIAL INSPECTION SCHEDULE AS PER 2013 CBC CHAPTER 17			
ITEM	CONTINUOUS INSPECTION	PERIODIC INSPECTION	COMMENTS
INSPECTION OF REINFORCING STEEL AND PLACEMENT		X	REF. NOTE SI2 AND SI3
VERIFYING USE OF DESIGN MIX		X	REF. NOTE SI2 AND SI3
AT THE TIME OF FRESH CONCRETE SAMPLING TO FABRICATE TEST SPECIMENTS	X		REF. NOTE SI2 AND SI3
INSPECTION OF CONCRETE PLACEMENT	X		REF. NOTE SI2, SI3 AND SI5

THE PROJECT WAS ORIGINALLY DESIGNED AND BID AS A REPLACEMENT OF THE BLOWER/FLARE STATION THAT INCLUDED REUSING SEVERAL COMPONENTS OF THE EXISTING FACILITIES AND 240 VAC MAIN POWER SUPPLY. THE CURRENT PROJECT, BIDDING PROCESS AND BID FORM IS BASED ON UPGRADING THE FACILITY TO USE 480 VAC POWER, REUSING VERY FEW AND SELECTED FACILITIES, AND USING A REVISED LAYOUT SHOWN ON SHEET 7A. ANY REFERENCES TO NEW 240 VAC EQUIPMENT IN THE PLANS OR SPECIFICATIONS ARE INTENDED TO BE 480 VAC.

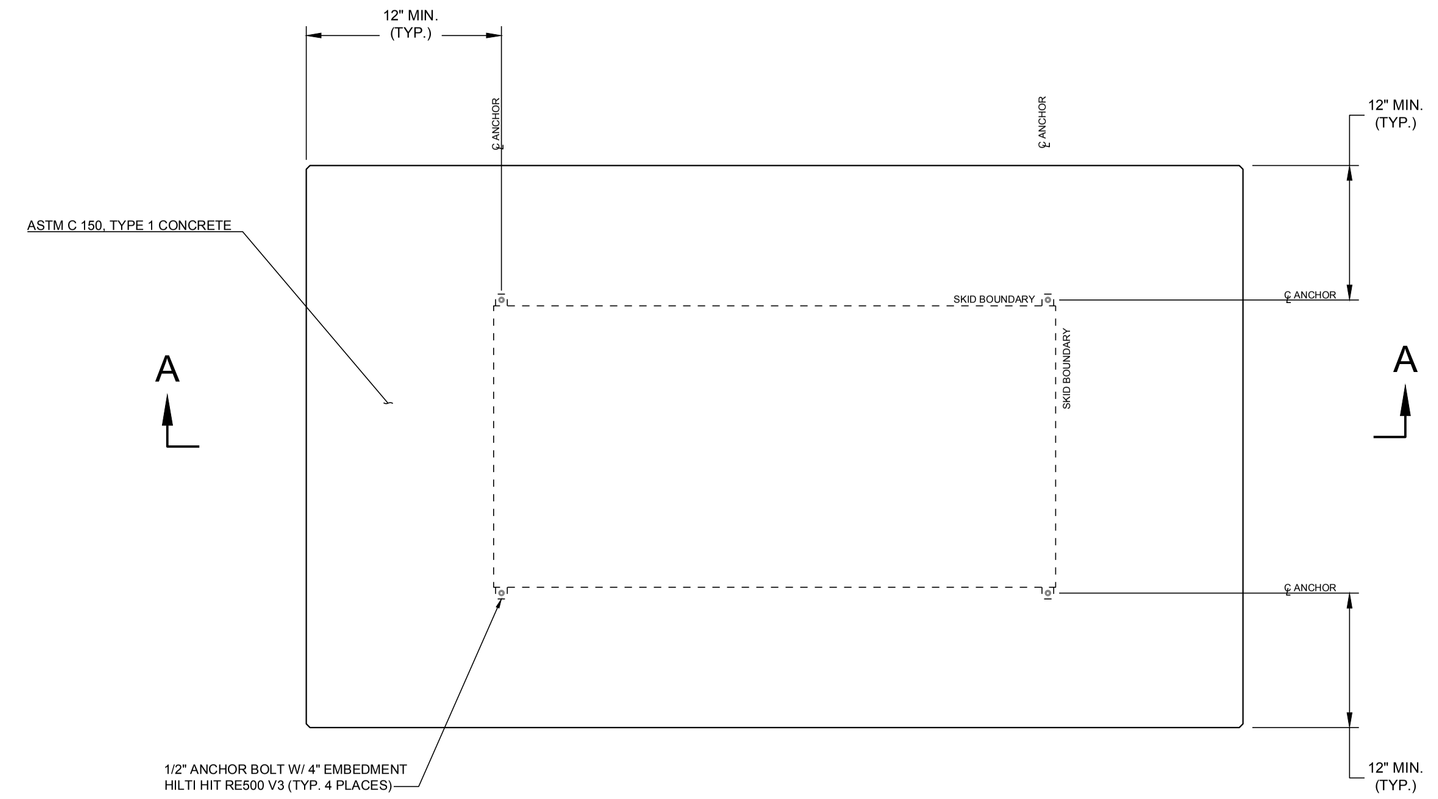

PLAN

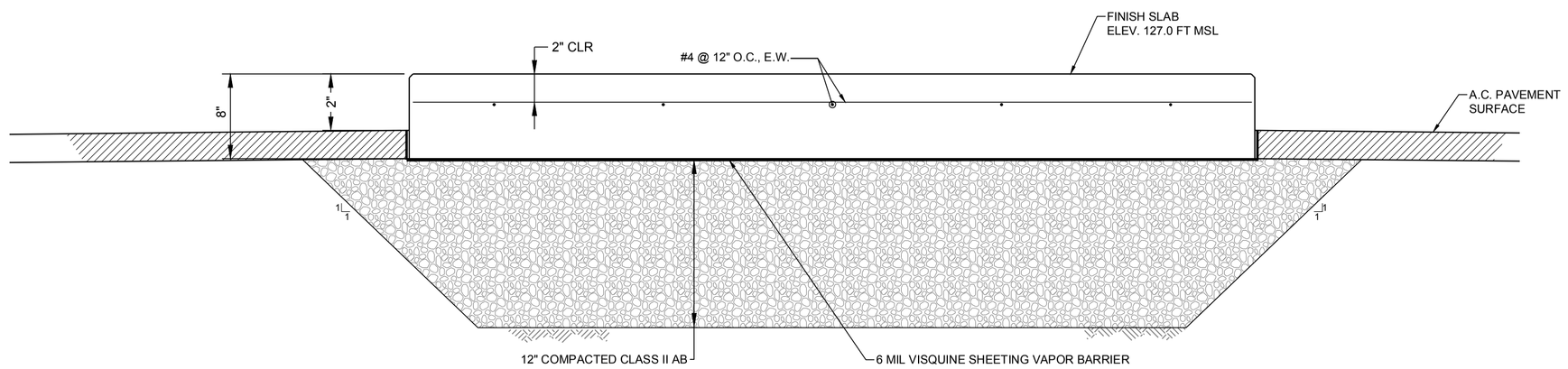

SECTION A-A

N.T.S. 1 EQUIPMENT PAD (7A|8)

Rev.	YYYY-MM-DD	DESCRIPTION	PREPARED	DESIGN	REVIEW	APPROVED
0	2016-08-19	ISSUED FOR BIDDING	MAL	APW	APW	RVW

CLIENT
WESTERN PLACER WASTE MANAGEMENT AUTHORITY
3033 FIDDYMENT ROAD
ROSEVILLE, CA. 95747

CONSULTANT
GOLDER ASSOCIATES, INC.
425 LAKESIDE DRIVE
SUNNYVALE, CALIFORNIA 94085
USA
+[1] (408) 220-9223
www.golder.com

PROJECT
WESTERN REGIONAL SANITARY LANDFILL
2016 GCCS EXPANSION

TITLE
STRUCTURAL NOTES AND DETAILS

PROJECT No. 1420152 | Rev. 0 | 12 of 58 | DRAWING 8

IF THIS MEASUREMENT DOES NOT MATCH WHAT IS SHOWN, THE SHEET SIZE HAS BEEN MODIFIED FROM: ANSI D

Path: \\sacramento\acad\Sites\Western Regional LF\CIVIL 3D\1420152_GCCS Expansion\Concept 2 (IFB RevO\) | File Name: 1418421_Flare Foundation.dwg

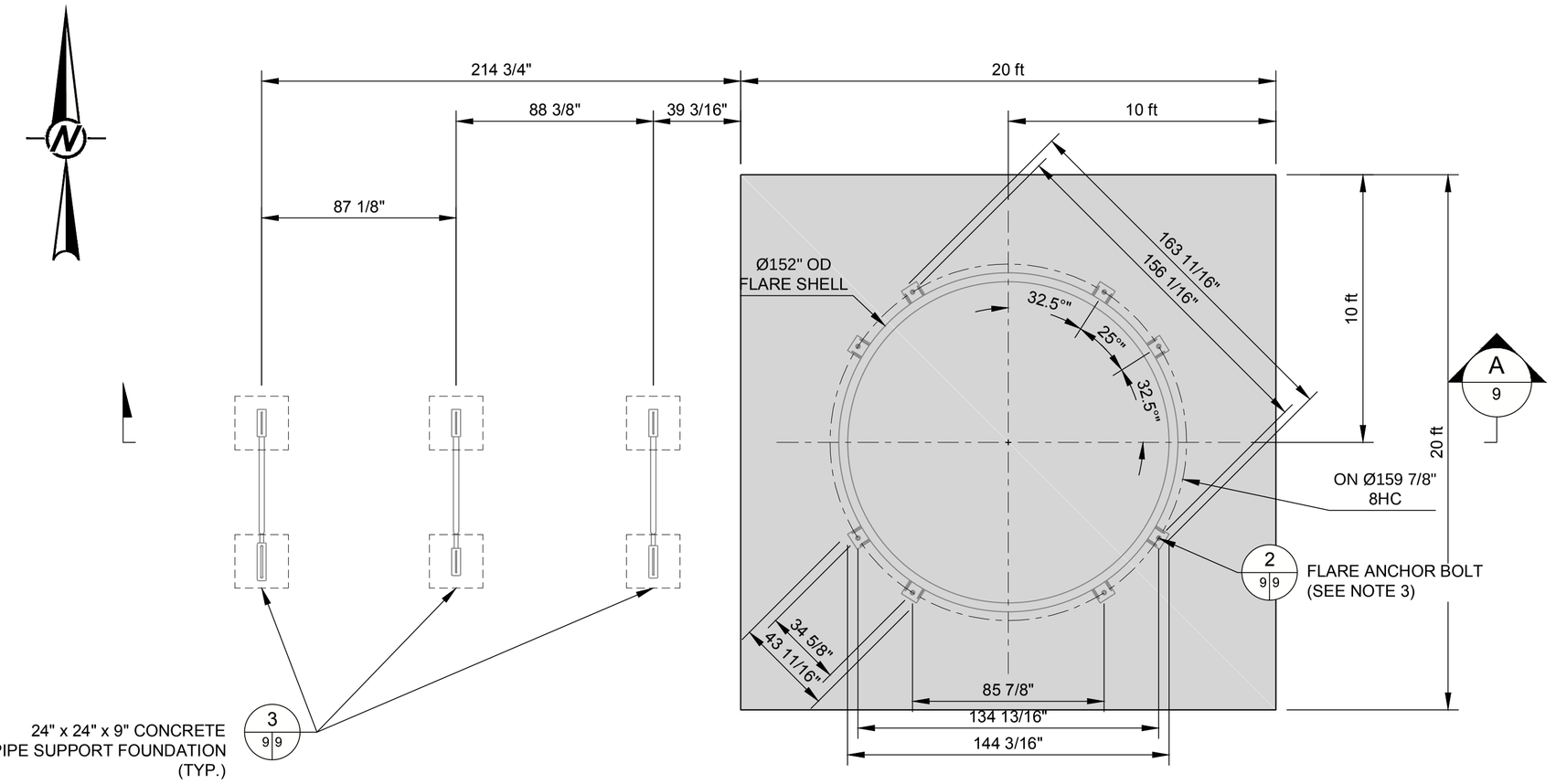

SCALE: 1"=4' 1 7|9 FLARE FOUNDATION PLAN VIEW

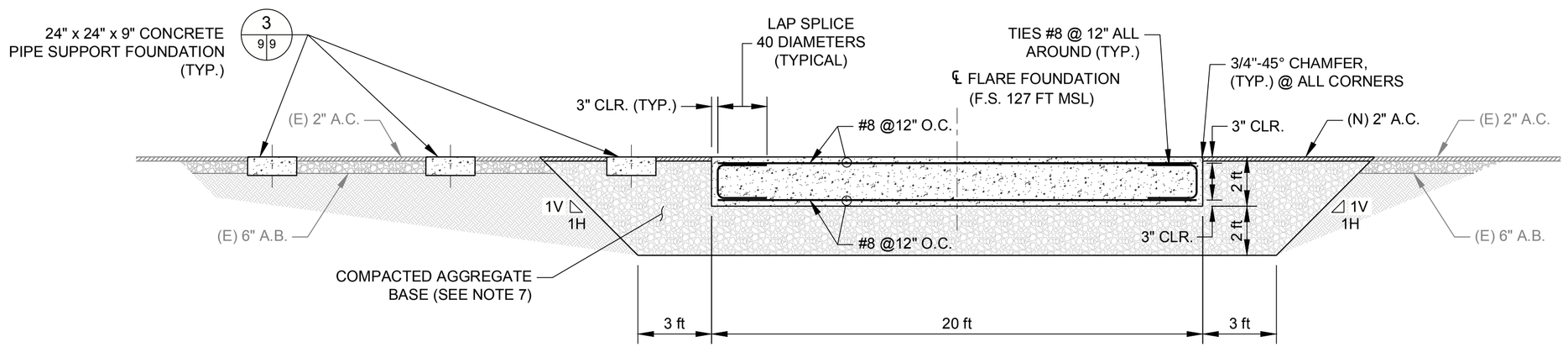

SCALE: 1"=4' A 9|9 SECTION A-A

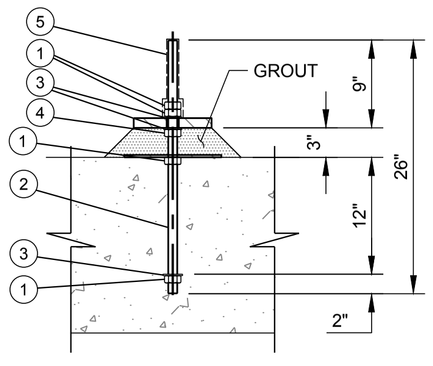

SCALE: 1"=1' 2 9|9 FLARE ANCHOR BOLT DETAIL

ANCHOR BOLT ASSEMBLY BILL OF MATERIAL (SEE NOTE 10)		
ITEM	QTY	DESCRIPTION
1	40	1-1/4" DIA HEAVY HEX NUT ASTM A563A
2	8	1-1/4" DIA ANCHOR ROD ASTM F1554 GRADE 36, 2'-2" LONG
3	16	1-1/4" DIA WASHER, ASTM F436
4	8	1-1/4" DIA LEVELING NUT, HEX JAM NUT OR APPROVED EQUAL
5	8	ANCHOR BOLT CAP
6	1	FLARE TEMPLATE (SEE NOTE 3)

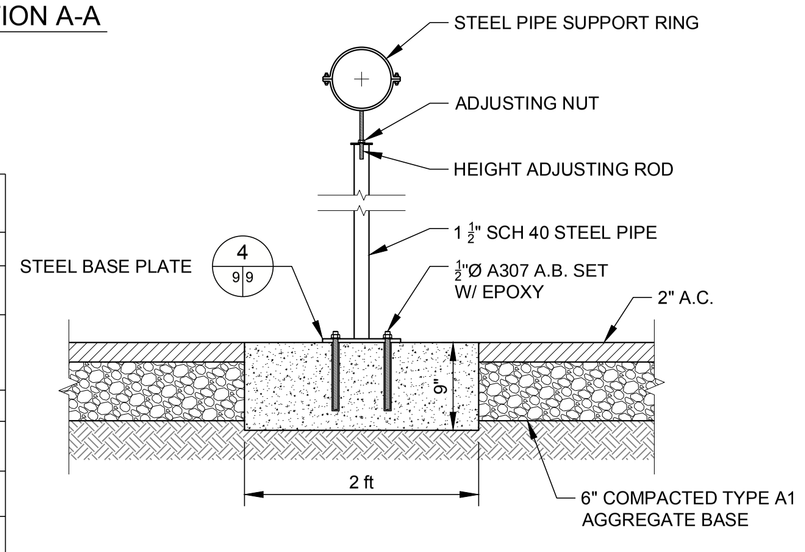

N.T.S. 3 9|9 PIPE STAND DETAIL (TYP.)

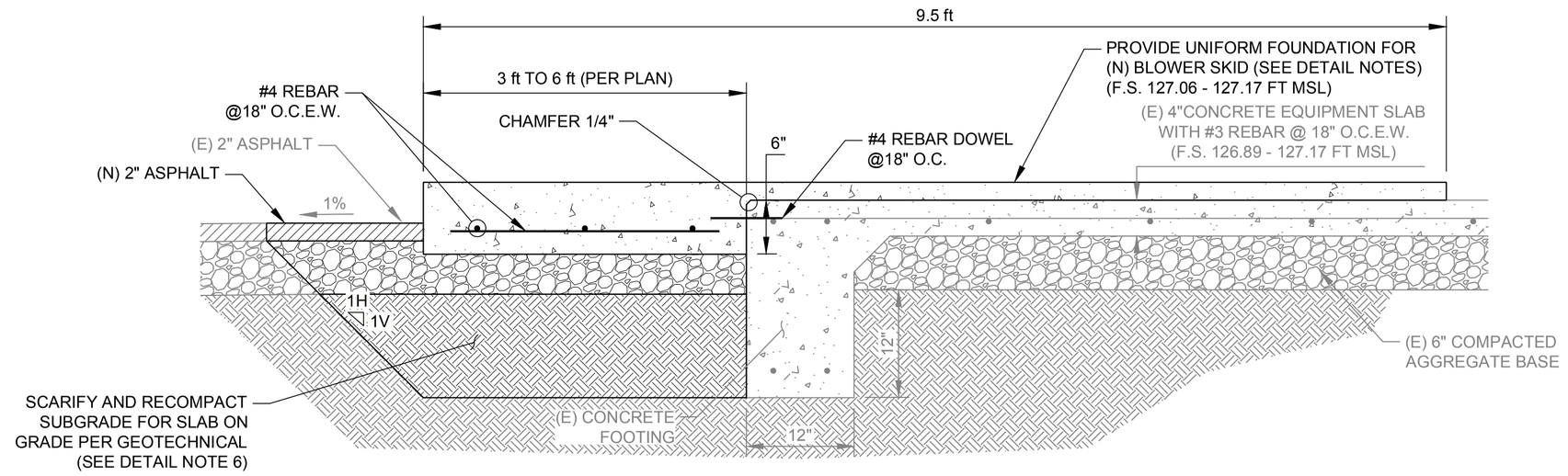

SCALE: 1"=1' 5 7|9 EQUIPMENT PAD EXTENSION DETAIL

DETAIL NOTES:

1. LOCATE EXISTING SLAB REINFORCEMENT TO MINIMIZE ENCOUNTERS DURING DRILLING.
2. ROUGHEN EXISTING CONCRETE CONTACT SURFACES TO FULL AMPLITUDE OF APPROXIMATELY ¼" AND REMOVE ALL LOOSE MATERIAL.
3. DRILL 5/8" DIAMETER HOLE, 8" DEEP HOLE FOR ADHESIVE ANCHORING OF #4 REBAR DOWEL (ASTM A615 GRADE 60).
4. CLEAN HOLE OF ALL LOOSE MATERIALS, DUST AND MOISTURE IN CONFORMANCE WITH ANCHOR ADHESIVE SYSTEM MANUFACTURER'S REQUIREMENTS, USING MATCHED-TOLERANCE STEEL BRUSH, FOLLOWED BY COMPRESSED AIR.
5. PREPARE AND INJECT ANCHOR ADHESIVE SYSTEM (HILTY HIT-HY 200-R OR APPROVED EQUAL) IN CONFORMANCE WITH MANUFACTURER'S REQUIREMENTS.
6. CONSTRUCT LEVEL AND FLAT STRUCTURAL SURFACE FOR SUPPORT OF (N) BLOWER SKID, USING BONDED CONCRETE OVERLAYS BETWEEN EXISTING RAISED EQUIPMENT PADS. SEE EXISTING FINISH SLAB ELEVATION AND CONDITIONS IN LAWRENCE AND ASSOCIATES, "GAS-EXTRACTION SYSTEM AS-BUILT PLANS, 1996.

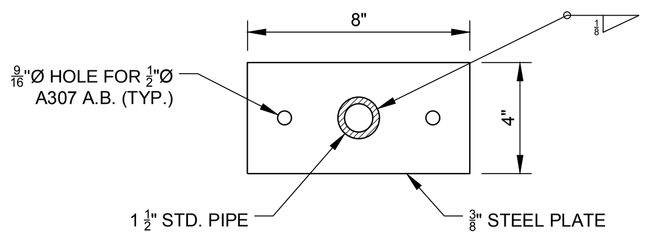

N.T.S. 4 9|9 STEEL PLATE DETAIL

THE PROJECT WAS ORIGINALLY DESIGNED AND BID AS A REPLACEMENT OF THE BLOWER/FLARE STATION THAT INCLUDED REUSING SEVERAL COMPONENTS OF THE EXISTING FACILITIES AND 240 VAC MAIN POWER SUPPLY. THE CURRENT PROJECT, BIDDING PROCESS AND BID FORM IS BASED ON UPGRADING THE FACILITY TO USE 480 VAC POWER, REUSING VERY FEW AND SELECTED FACILITIES, AND USING A REVISED LAYOUT SHOWN ON SHEET 7A. ANY REFERENCES TO NEW 240 VAC EQUIPMENT IN THE PLANS OR SPECIFICATIONS ARE INTENDED TO BE 480 VAC.

GEOTECHNICAL NOTE(S)

1. FOR DETAILS ON SUBSURFACE CONDITIONS, RECOMMENDED SOIL BEARING PRESSURE, SITE GRADING, AND SUBGRADE PREPARATION REQUIREMENTS, REFER TO "GEOTECHNICAL INVESTIGATIONS REPORT" BY BROWN & MILLS, INC. DATED FEBRUARY 28, 1995.
2. FOUNDATION EXCAVATION AND FILL SHALL BE OBSERVED AND APPROVED BY THE PROJECT GEOTECHNICAL ENGINEER PRIOR TO PLACEMENT OF REINFORCEMENT AND CONCRETE.
3. ALL FOUNDATIONS SHALL BE FOUNDED AT LEAST 3 FEET BELOW EXISTING GRADES AFTER REMOVING THE EXISTING FILL SOILS.
4. THE SUBGRADE BELOW THE FOUNDATIONS SHALL BE SCARIFIED AND RE-COMPACTED TO 95% RELATIVE COMPACTION (RELATIVE TO THE MODIFIED PROCTOR TEST; I.E., ASTM D1557) TO A MINIMUM DEPTH OF 12 INCHES. THE PROJECT GEOTECHNICAL ENGINEER MAY WAIVE THIS REQUIREMENT IF DENSE NATIVE SOIL IS ENCOUNTERED AT OR ABOVE THE 3 FEET EXCAVATION DEPTH.
5. ALL FILL AND BACKFILL MATERIALS SHALL BE APPROVED BY THE PROJECT GEOTECHNICAL ENGINEER BEFORE PLACEMENT. ALL BACKFILL SHALL CONSIST OF GRANULAR MATERIAL WITH A PLASTICITY INDEX OF LESS THAN 10 AND PLACED IN 8-INCH LOOSE LIFTS AND COMPACTED TO MINIMUM 90 PERCENT RELATIVE COMPACTION (ASTM D1557) AT A MOISTURE CONTENT OF BETWEEN -3 AND +3% OF THE OPTIMUM DETERMINED FROM ASTM D1557. BACKFILL NEXT TO FOUNDATIONS AND PEDESTALS SHALL BE DONE USING A HAND-OPERATED COMPACTOR IN 4-INCH LOOSE LIFTS.
6. THE EXISTING SUBGRADE BELOW THE DRAIN ROCK UNDERLYING THE SLAB-ON-GRADE SHALL BE SCARIFIED AND RE-COMPACTED TO 90 PERCENT RELATIVE COMPACTION (ASTM D1557) AT A MOISTURE CONTENT OF BETWEEN +2 AND +5% OF THE OPTIMUM DETERMINED FROM ASTM D1557, TO A MINIMUM DEPTH OF 12 INCHES BELOW THE BOTTOM OF DRAIN ROCK. THE SUBGRADE PREPARATION SHALL BE OBSERVED BY A QUALIFIED GEOTECHNICAL ENGINEER. IF UNACCEPTABLE SOILS ARE ENCOUNTERED, SUCH SOILS SHALL BE REMOVED AND REPLACED WITH BACKFILL AS NOTED IN NO. 5 ABOVE.

NOTE(S)

1. DIMENSIONS ARE IN FEET AND INCHES.
2. FLARE FOUNDATION DESIGN CRITERIA

   WIND DESIGN:
   WIND SPEED: 110 MPH (3-SEC PEAK GUST), EXPOSURE CATEGORY C

   ALLOWABLE SOIL BEARING:
   2000 PSF (FOR ENGINEERED FILL)
   PER GEOTECHNICAL REPORT, REMOVE (E) FILL SOILS TO (E) CEMENTED SILTSTONE SURFACE (HARDPAN), PLUS EXCAVATE AN ADDITIONAL 3 INCHES. CONSTRUCT ENGINEERED FILL (OR PLACE LEAN CONCRETE) TO FOUNDATION SUBGRADE. ENGINEER SHALL VERIFY THAT ALL FOUNDATIONS FULLY PENETRATE EXISTING FILL SOILS.

   CONCRETE STRENGTH:
   F'C= 3000 PSI @ 28 DAYS

   CEMENT:
   ASTM C150 TYPE I

   REINFORCING STEEL:
   ASTM A615 GRADE 60 DEFORMED BAR

   SUBGRADE COMPACTION FOR ENGINEERED FILL:
   95 PERCENT MODIFIED PROCTOR MAXIMUM DENSITY

   EARTHQUAKE LOADS:

   FLARE WEIGHT: 70 KIPS
   BASE SHEAR: 21 KIPS
   MOMENT: 420 FT-KIPS

   WIND LOADS:

   FLARE
   BASE SHEAR: 27.4 KIPS
   MOMENT: 731 FT-KIPS
3. ANCHOR BOLT TEMPLATE SHALL BE PROVIDED BY FLARE MANUFACTURER. ANCHOR BOLT SIZE AND PATTERN SHALL BE VERIFIED WITH MANUFACTURER'S SHOP DRAWINGS PRIOR TO CONSTRUCTION.
4. FOUR (4) CONCRETE TEST CYLINDERS SHALL BE TAKEN BY THE CONTRACTOR AND DELIVERED TO THE TESTING LAB APPROVED BY OWNER. ONE TEST CYLINDER SHALL BE TESTED AT 7 DAYS FOR 70 PERCENT OF DESIGN STRENGTH. TWO SHALL BE TESTED AT 28 DAYS FOR FULL DESIGN STRENGTH, AND ONE SHALL BE HELD UNTIL THE FINAL ACCEPTANCE OF THE PROJECT.
5. FINISH GRADE TO DRAIN. PLACE EARTH FILL PER SPECIFICATION.
6. CONTRACTOR SHALL POTHOLE, LOCATE AND PROTECT ALL EXISTING UNDERGROUND UTILITIES.
7. THE AGGREGATE BASE SHOULD BE COMPACTED TO 95 PERCENT RELATIVE COMPACTION (ASTM D 1557) USING A VIBRATORY ROLLER. AGGREGATE BASE SHALL HAVE LESS THAN 6 PERCENT OF MASS PASSING #200 MESH SIEVE IN ACCORDANCE WITH ASTM D422.
8. FOUNDATION AND ANCHOR BOLT DIMENSIONS MAY VARY BASED ON FINAL EQUIPMENT SHOP DRAWINGS.
9. FOR BLOWER SKID, USE 3/4" ANCHOR BOLT W/ 4 3/4" EMBEDMENT HILTI EXP ANCHOR KB-TZ SS 304 OR APPROVED EQUAL.
10. ANCHOR BOLT ASSEMBLY SHALL HAVE A GALVANIZED FINISH.
11. GROUT BY "MASTERFLOW 928". NON-SHRINK GROUT SHALL BE MANUFACTURED BY MASTER-BUILDERS OR APPROVED EQUAL.
12. DO NOT USE FLARE UNTIL CONCRETE HAS CURED 28 DAYS.

Rev.	YYYY-MM-DD	DESCRIPTION	PREPARED	DESIGN	REVIEW	APPROVED
0	2016-08-19	ISSUED FOR BIDDING	MAL	APW	APW	RVW

CLIENT
WESTERN PLACER WASTE MANAGEMENT AUTHORITY
3033 FIDDYMENT ROAD
ROSEVILLE, CA. 95747

CONSULTANT
GOLDER ASSOCIATES, INC.
425 LAKESIDE DRIVE
SUNNYVALE, CALIFORNIA 94085
USA
+[1] (408) 220-9223
www.golder.com

PROJECT
WESTERN REGIONAL SANITARY LANDFILL
2016 GCCS EXPANSION

TITLE
BLOWER/ FLARE STATION FOUNDATION DETAILS

PROJECT No. 1420152 | Rev. 0 | 13 of 58 | DRAWING 9

IF THIS MEASUREMENT DOES NOT MATCH WHAT IS SHOWN, THE SHEET SIZE HAS BEEN MODIFIED FROM: ANSI D

Path: \\sacramento\acad\Sites\Western Regional LF\CIVIL 3D\1420152_GCCS Expansion\Concept 2 (IFB Rev0)\ | File Name: 1418421_Flare Foundation.dwg

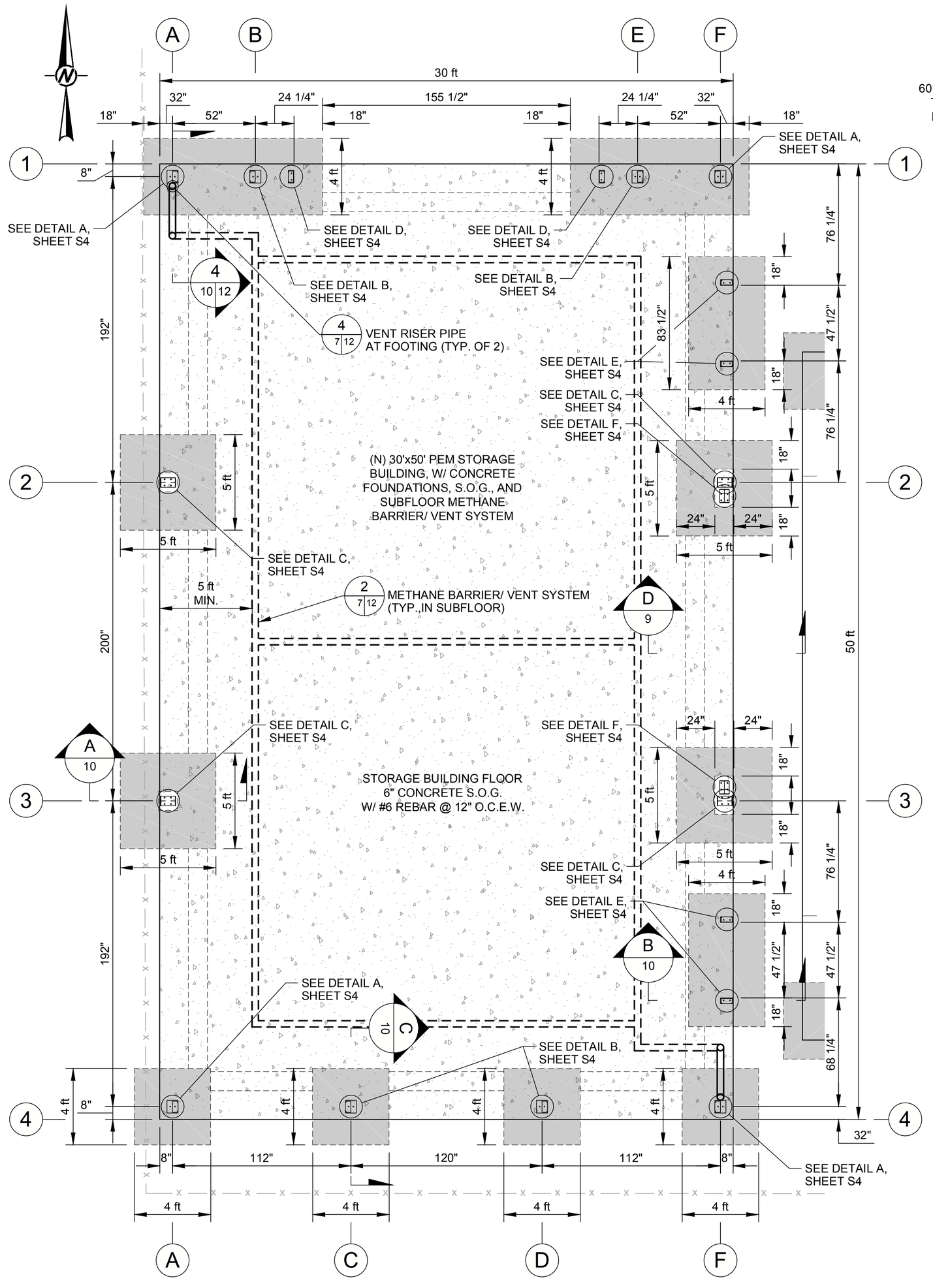

SCALE: 1"=4' 1 7 10 PEM STORAGE BUILDING FOUNDATION PLAN VIEW

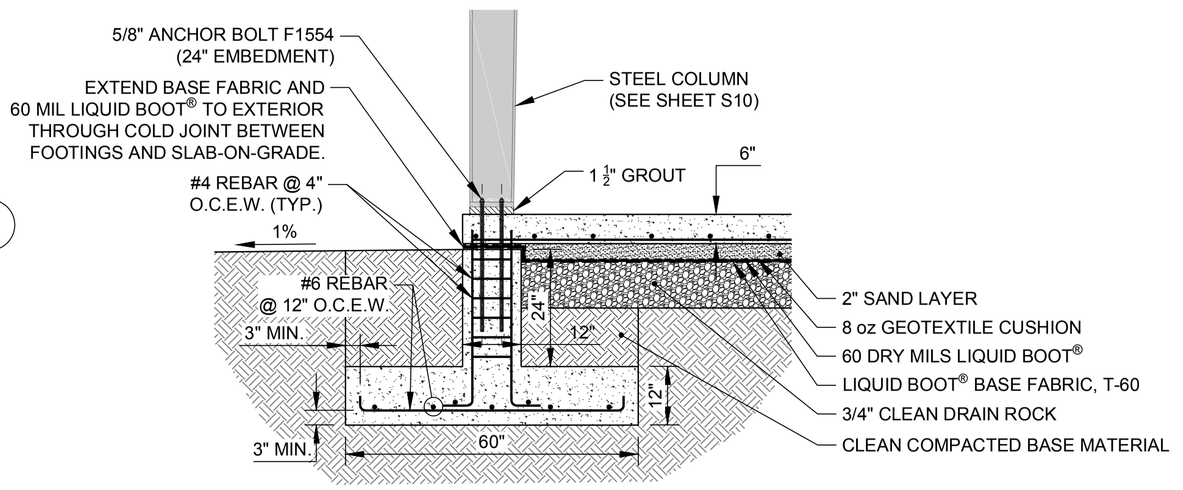

SCALE: 1"=2' A 10 SECTION A

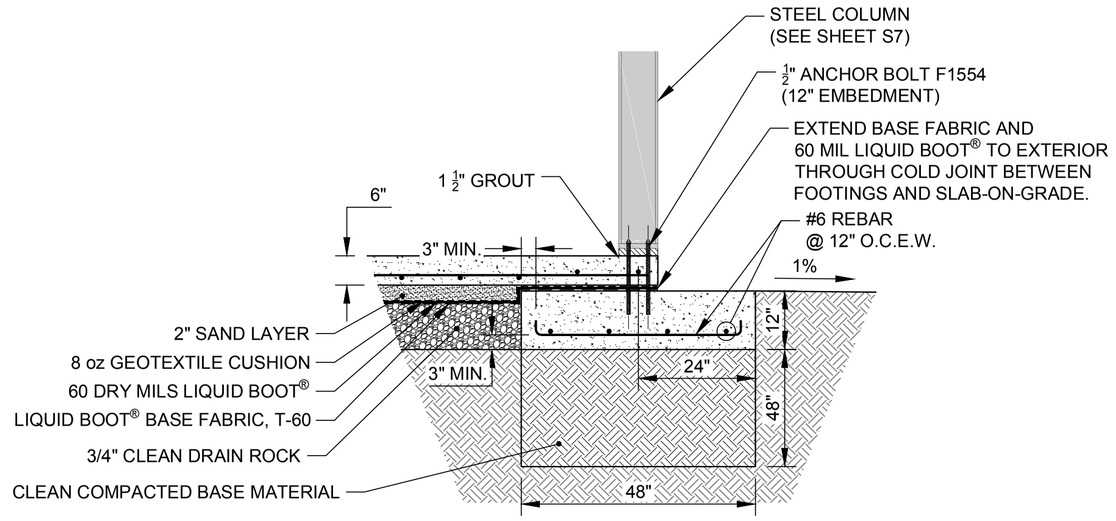

SCALE: 1"=2' B 10 SECTION B

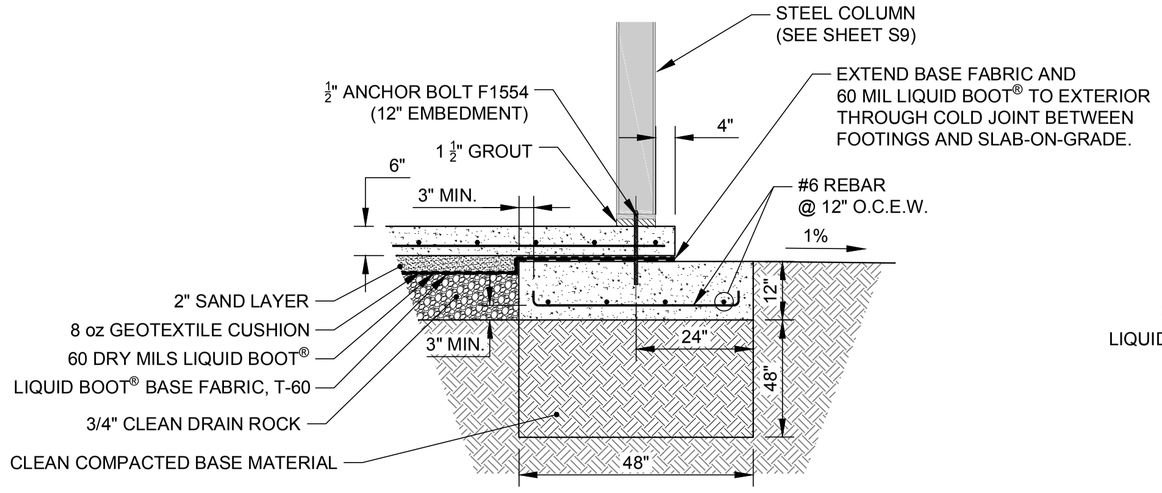

SCALE: 1"=2' C 10 SECTION C

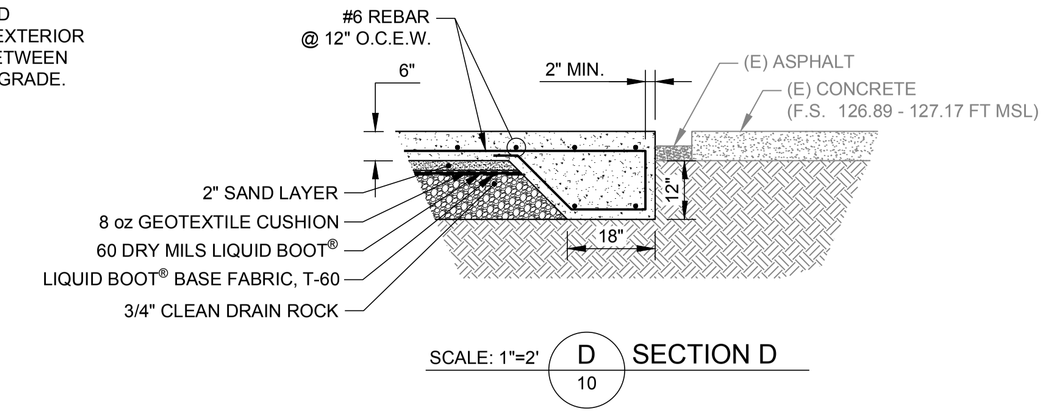

SCALE: 1"=2' D 10 SECTION D

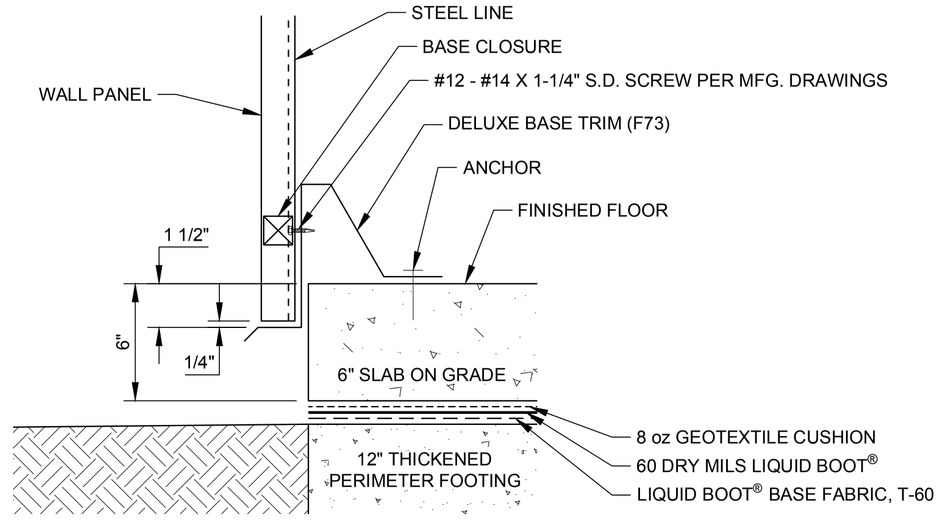

* MINIMUM ¼" DIA. ANCHOR OR EQUIVALENT POWER-DRIVEN FASTENER AT 24" ON CENTER MAXIMUM.

SCALE: NTS 2 10 10 SECTION THRU WALL PANEL AND CONCRETE FOUNDATION WITH DELUXE BASE TRIM

THE PROJECT WAS ORIGINALLY DESIGNED AND BID AS A REPLACEMENT OF THE BLOWER/FLARE STATION THAT INCLUDED REUSING SEVERAL COMPONENTS OF THE EXISTING FACILITIES AND 240 VAC MAIN POWER SUPPLY. THE CURRENT PROJECT, BIDDING PROCESS AND BID FORM IS BASED ON UPGRADING THE FACILITY TO USE 480 VAC POWER, REUSING VERY FEW AND SELECTED FACILITIES, AND USING A REVISED LAYOUT SHOWN ON SHEET 7A. ANY REFERENCES TO NEW 240 VAC EQUIPMENT IN THE PLANS OR SPECIFICATIONS ARE INTENDED TO BE 480 VAC.

GEOTECHNICAL NOTE(S)

1. FOR DETAILS ON SUBSURFACE CONDITIONS, RECOMMENDED SOIL BEARING PRESSURE, SITE GRADING, AND SUBGRADE PREPARATION REQUIREMENTS, REFER TO "GEOTECHNICAL INVESTIGATIONS REPORT" BY BROWN & MILLS, INC. DATED FEBRUARY 28, 1995.
2. FOUNDATION EXCAVATION AND FILL SHALL BE OBSERVED AND APPROVED BY THE PROJECT GEOTECHNICAL ENGINEER PRIOR TO PLACEMENT OF REINFORCEMENT AND CONCRETE.
3. ALL FOUNDATIONS SHALL BE FOUNDED AT LEAST 3 FEET BELOW EXISTING GRADES AFTER REMOVING THE EXISTING FILL SOILS.
4. THE SUBGRADE BELOW THE FOUNDATIONS SHALL BE SCARIFIED AND RE-COMPACTED TO 95% RELATIVE COMPACTION (RELATIVE TO THE MODIFIED PROCTOR TEST; I.E., ASTM D1557) TO A MINIMUM DEPTH OF 12 INCHES. THE PROJECT GEOTECHNICAL ENGINEER MAY WAIVE THIS REQUIREMENT IF DENSE NATIVE SOIL IS ENCOUNTERED AT OR ABOVE THE 3 FEET EXCAVATION DEPTH.
5. ALL FILL AND BACKFILL MATERIALS SHALL BE APPROVED BY THE PROJECT GEOTECHNICAL ENGINEER BEFORE PLACEMENT. ALL BACKFILL SHALL CONSIST OF GRANULAR MATERIAL WITH A PLASTICITY INDEX OF LESS THAN 10 AND PLACED IN 8-INCH LOOSE LIFTS AND COMPACTED TO MINIMUM 90 PERCENT RELATIVE COMPACTION (ASTM D1557) AT A MOISTURE CONTENT OF BETWEEN -3 AND +3% OF THE OPTIMUM DETERMINED FROM ASTM D1557. BACKFILL NEXT TO FOUNDATIONS AND PEDESTALS SHALL BE DONE USING A HAND-OPERATED COMPACTOR IN 4-INCH LOOSE LIFTS.
6. THE EXISTING SUBGRADE BELOW THE DRAIN ROCK UNDERLYING THE SLAB-ON-GRADE SHALL BE SCARIFIED AND RE-COMPACTED TO 90 PERCENT RELATIVE COMPACTION (ASTM D1557) AT A MOISTURE CONTENT OF BETWEEN +2 AND +5% OF THE OPTIMUM DETERMINED FROM ASTM D1557, TO A MINIMUM DEPTH OF 12 INCHES BELOW THE BOTTOM OF DRAIN ROCK. THE SUBGRADE PREPARATION SHALL BE OBSERVED BY A QUALIFIED GEOTECHNICAL ENGINEER. IF UNACCEPTABLE SOILS ARE ENCOUNTERED, SUCH SOILS SHALL BE REMOVED AND REPLACED WITH BACKFILL AS NOTED IN NO. 5 ABOVE.

Rev.	YYYY-MM-DD	DESCRIPTION	PREPARED	DESIGN	REVIEW	APPROVED
0	2016-08-19	ISSUED FOR BIDDING	MAL	APW	APW	RVW

CLIENT
WESTERN PLACER WASTE MANAGEMENT AUTHORITY
3033 FIDDYMENT ROAD
ROSEVILLE, CA. 95747

CONSULTANT
GOLDER ASSOCIATES, INC.
425 LAKESIDE DRIVE
SUNNYVALE, CALIFORNIA 94085
USA
+[1] (408) 220-9223
www.golder.com

PROJECT
WESTERN REGIONAL SANITARY LANDFILL
2016 GCCS EXPANSION

TITLE
PEM STORAGE BUILDING FOUNDATION DETAILS

PROJECT No. 1420152 | Rev. 0 | 14 of 58 | DRAWING 10

IF THIS MEASUREMENT DOES NOT MATCH WHAT IS SHOWN, THE SHEET SIZE HAS BEEN MODIFIED FROM: ANSI D

0 1 in

Path: \\sacramento\acad\Sites\Western Regional LF\CIVIL 3D\1420152_GCCS Expansion\Concept 2 (IFB Rev0\) | File Name: 1418421_Flare Foundation.dwg

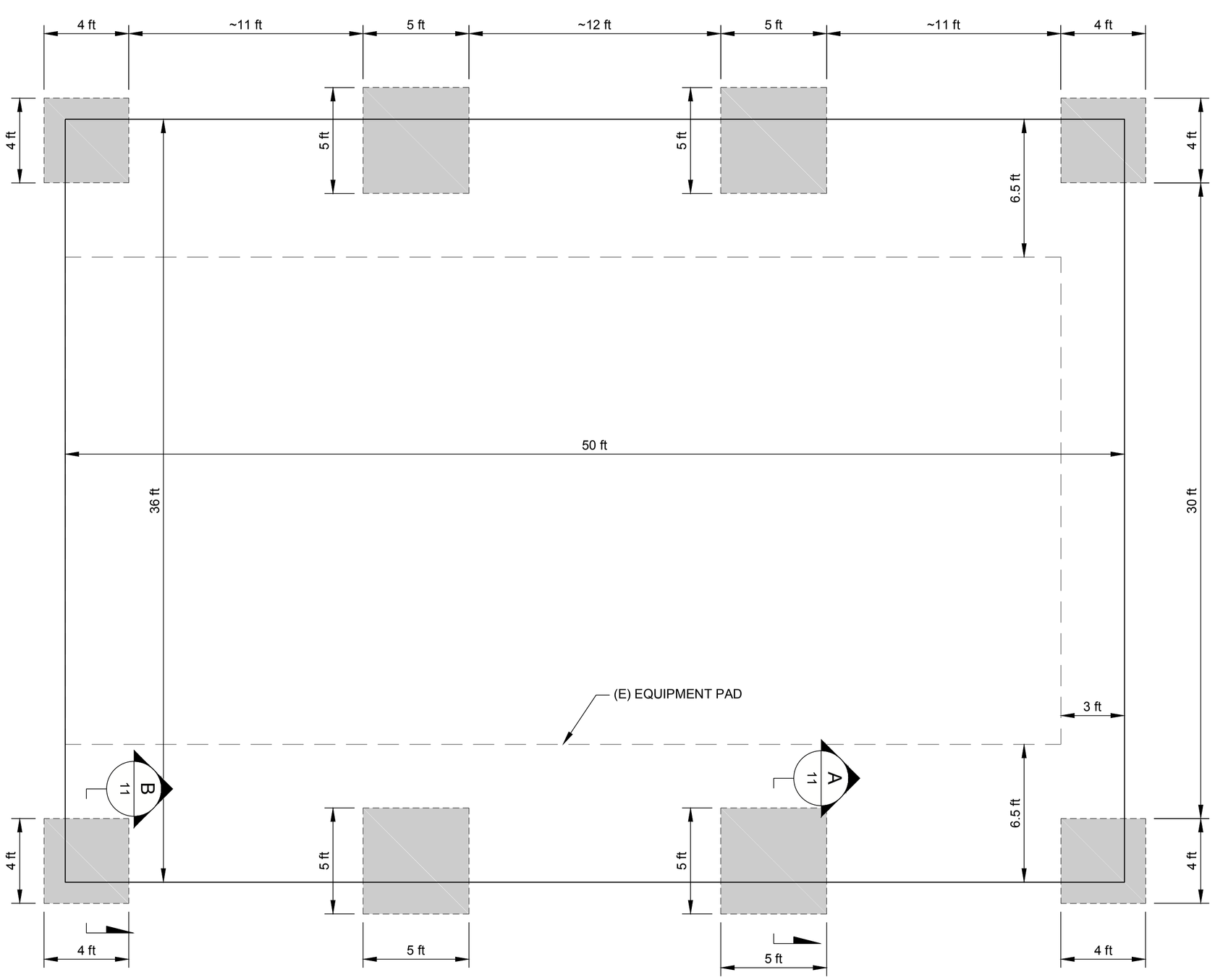

SCALE: 1"=4' 1/7|11 EQUIPMENT CANOPY FOUNDATION PLAN VIEW

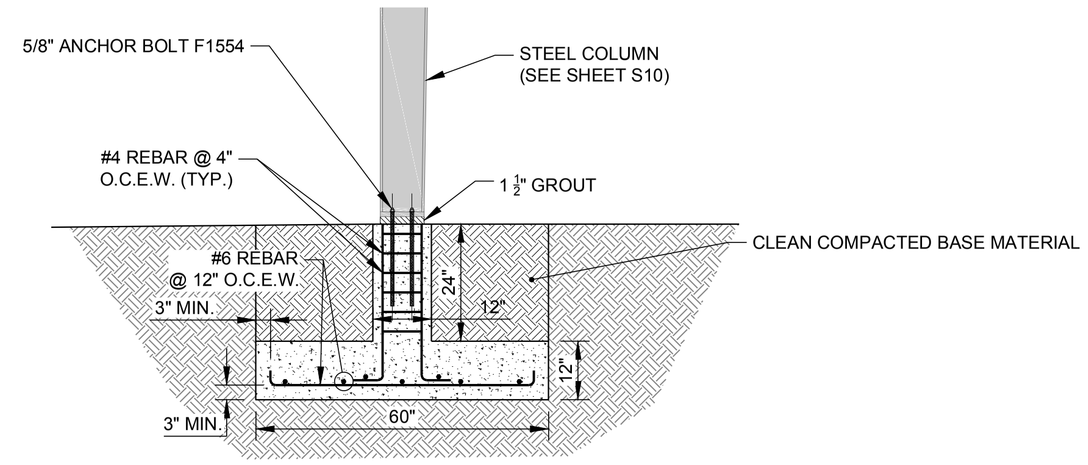

SCALE: 1"=2' A/11 SECTION A

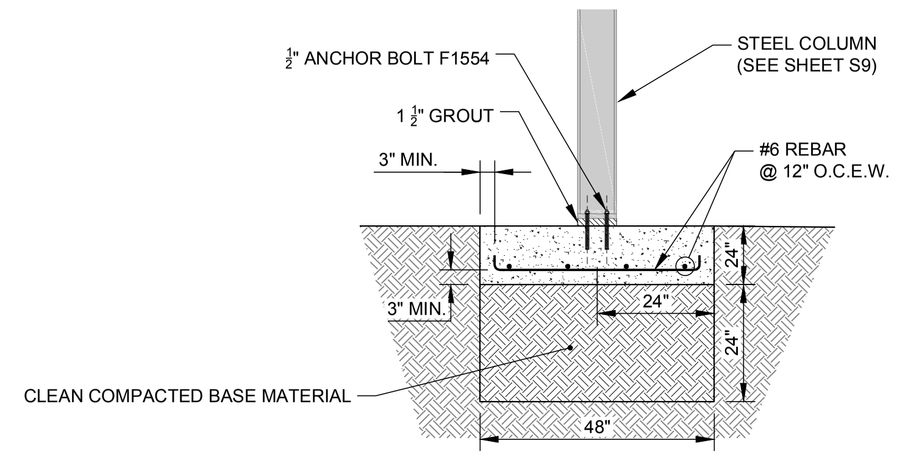

SCALE: 1"=2' B/11 SECTION B

THE PROJECT WAS ORIGINALLY DESIGNED AND BID AS A REPLACEMENT OF THE BLOWER/FLARE STATION THAT INCLUDED REUSING SEVERAL COMPONENTS OF THE EXISTING FACILITIES AND 240 VAC MAIN POWER SUPPLY. THE CURRENT PROJECT, BIDDING PROCESS AND BID FORM IS BASED ON UPGRADING THE FACILITY TO USE 480 VAC POWER, REUSING VERY FEW AND SELECTED FACILITIES, AND USING A REVISED LAYOUT SHOWN ON SHEET 7A. ANY REFERENCES TO NEW 240 VAC EQUIPMENT IN THE PLANS OR SPECIFICATIONS ARE INTENDED TO BE 480 VAC.

NOTE(S) (SEE GEOTECHNICAL NOTES ON SHEET 10)

1. CANOPY FOUNDATION LOCATIONS AND DIMENSIONS ARE ESTIMATES FOR BIDDING PURPOSES ONLY. FINAL LOCATIONS AND DIMENSIONS WILL BE PROVIDED FOR CONSTRUCTION, BASED ON CANOPY VENDOR FINAL CALCULATIONS AND DRAWINGS.

Rev.	YYYY-MM-DD	DESCRIPTION	PREPARED	DESIGN	REVIEW	APPROVED
0	2016-08-19	ISSUED FOR BIDDING	MAL	APW	APW	RVW

CLIENT
WESTERN PLACER WASTE MANAGEMENT AUTHORITY
3033 FIDDYMENT ROAD
ROSEVILLE, CA. 95747

CONSULTANT
GOLDER ASSOCIATES, INC.
425 LAKESIDE DRIVE
SUNNYVALE, CALIFORNIA 94085
USA
+[1] (408) 220-9223
www.golder.com

PROJECT
WESTERN REGIONAL SANITARY LANDFILL
2016 GCCS EXPANSION

TITLE
EQUIPMENT CANOPY FOUNDATION DETAILS (PRELIMINARY)

PROJECT No. 1420152 | Rev. 0 | 15 of 58 | DRAWING 11

IF THIS MEASUREMENT DOES NOT MATCH WHAT IS SHOWN, THE SHEET SIZE HAS BEEN MODIFIED FROM: ANSI D

Path: \\sacramento\acad\Sites\Western Regional LF\CIVIL 3D\1420152_GCCS Expansion\Concept 2 (IFB Rev0\) | File Name: 1418421_Flare Foundation.dwg

THE PROJECT WAS ORIGINALLY DESIGNED AND BID AS A REPLACEMENT OF THE BLOWER/FLARE STATION THAT INCLUDED REUSING SEVERAL COMPONENTS OF THE EXISTING FACILITIES AND 240 VAC MAIN POWER SUPPLY. THE CURRENT PROJECT, BIDDING PROCESS AND BID FORM IS BASED ON UPGRADING THE FACILITY TO USE 480 VAC POWER, REUSING VERY FEW AND SELECTED FACILITIES, AND USING A REVISED LAYOUT SHOWN ON SHEET 7A. ANY REFERENCES TO NEW 240 VAC EQUIPMENT IN THE PLANS OR SPECIFICATIONS ARE INTENDED TO BE 480 VAC.

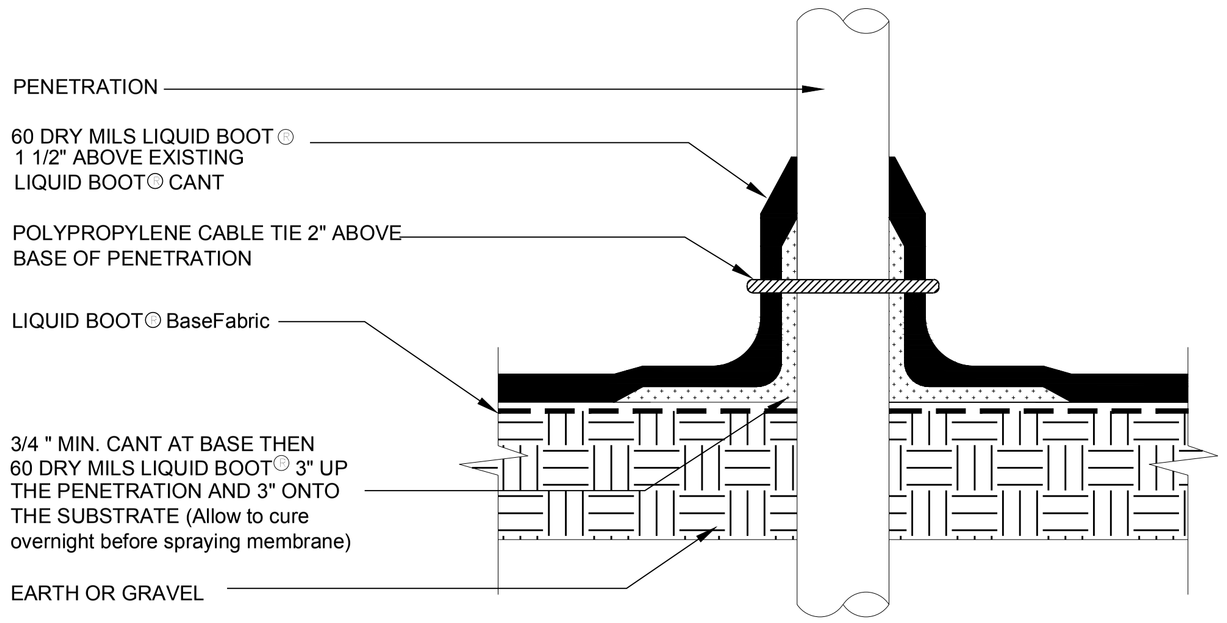

NOTE:
All penetrations shall be cleaned per specifications before LIQUID BOOTⒸ is applied.

SCALE: N.T.S. 1 (12|12) METHANE BARRIER PENETRATIONS ON EARTH OR GRAVEL SUBGRADE TYPICAL DETAIL

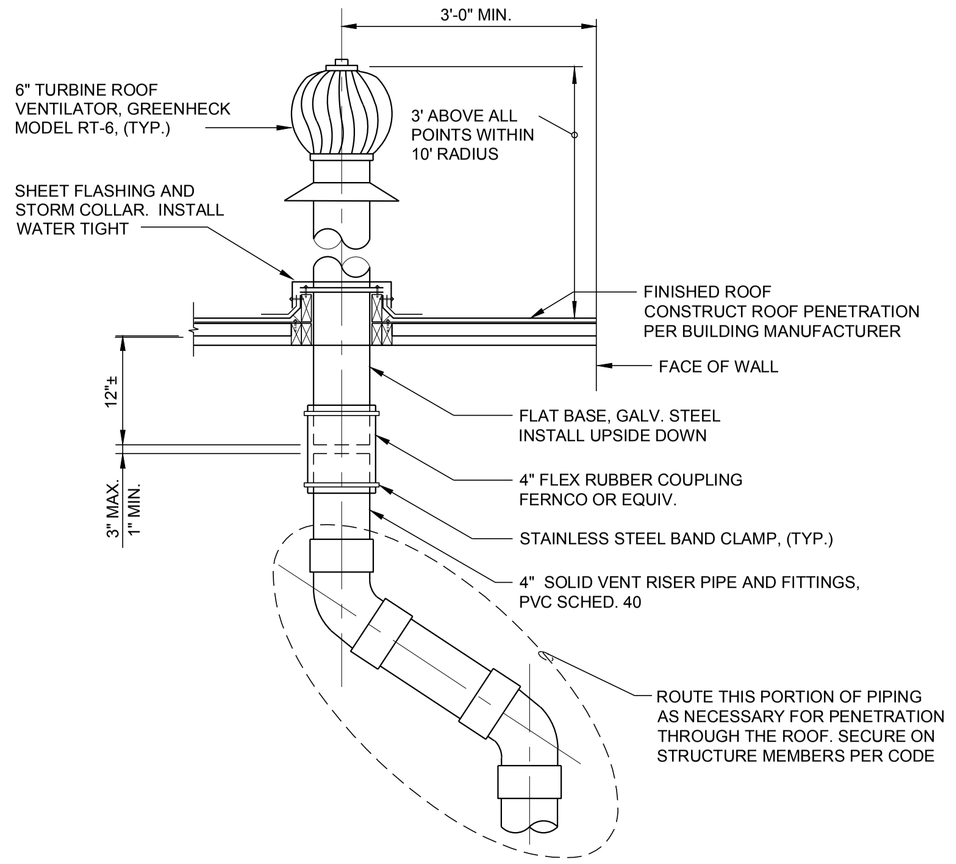

SCALE: N.T.S. 3 (7|12) VENT RISER PIPE ROOF PENETRATION (TYP.)

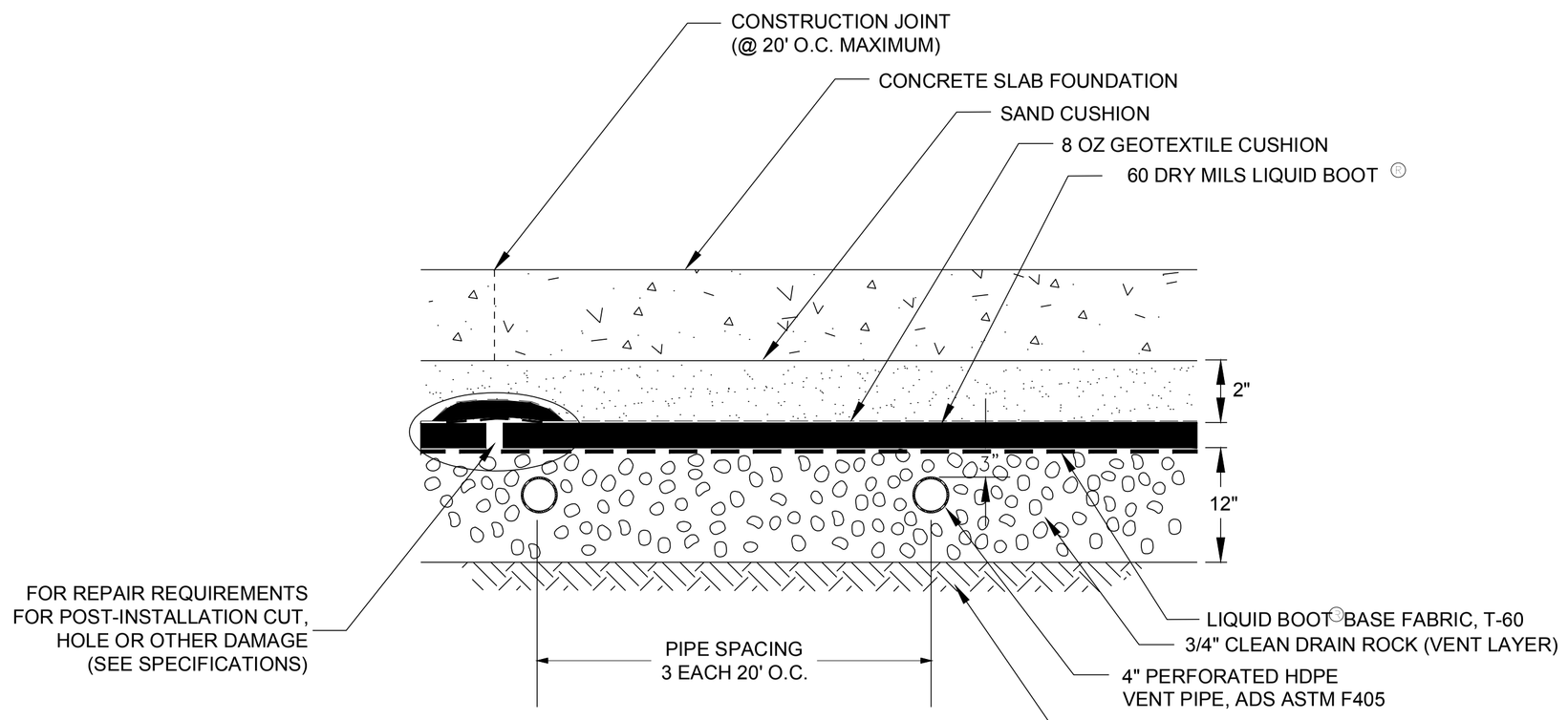

SCALE: N.T.S. 2 (7|12) METHANE BARRIER/ VENT SYSTEM TYPICAL SECTION

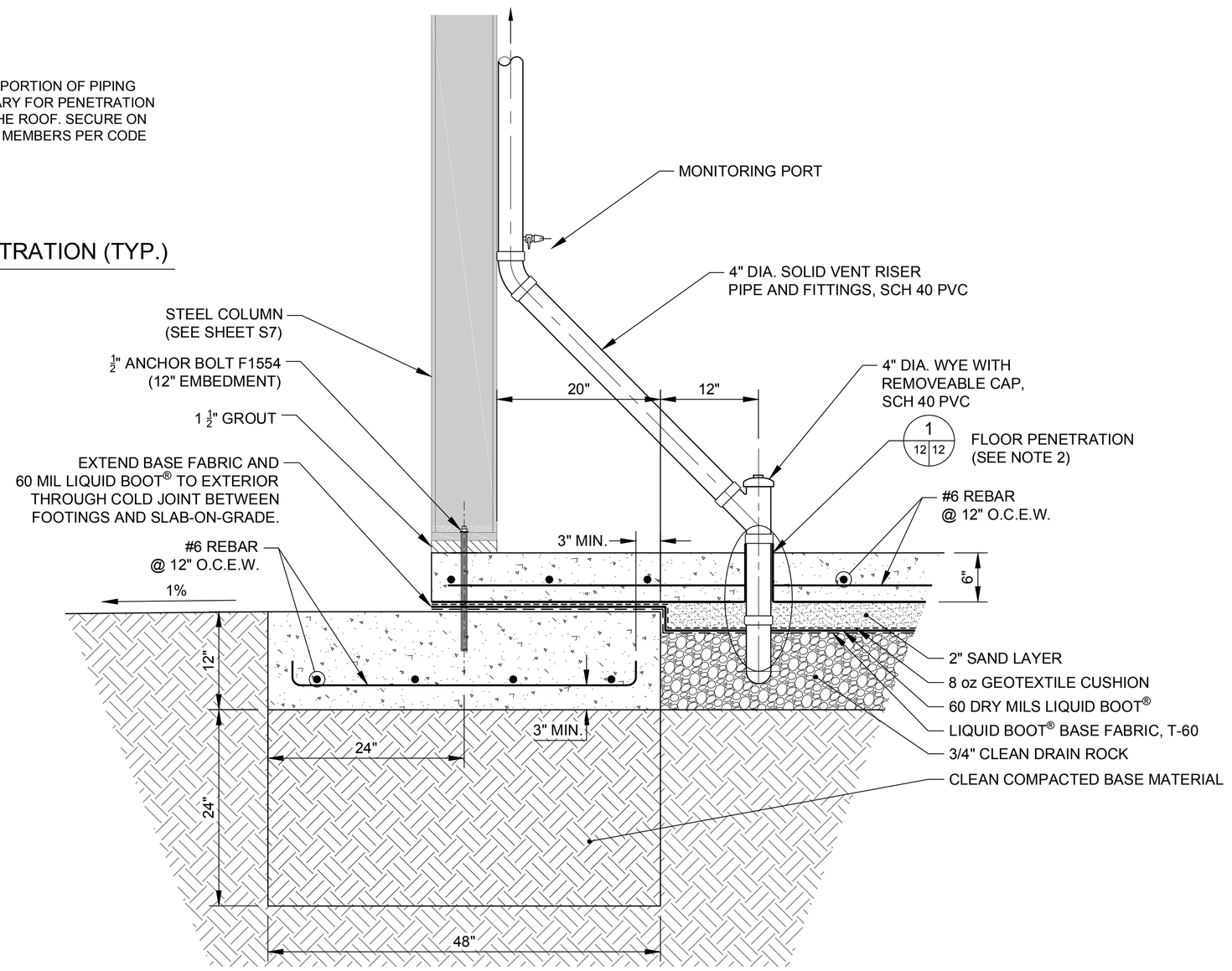

DETAIL NOTE(S)

1. STRUCTURAL ELEMENTS SHOWN ON THIS DRAWING ARE SCHEMATIC ONLY. SEE DRAWING 10 FOR SLAB-ON-GRADE AND STRUCTURAL FOUNDATION PLAN AND DETAILS.
2. PIPING SHOWN OFFSET TO INTERIOR FOR CLARITY. ALIGN SUBFLOOR RISER THROUGH PERIMETER FOOTING CLOSE TO FACE OF WALL. MAINTAIN 1.5" CLEAR TO CONCRETE REINFORCEMENT.

SCALE: N.T.S. 4 (7|12) VENT RISER PIPE AT FOOTING

Rev.	YYYY-MM-DD	DESCRIPTION	PREPARED	DESIGN	REVIEW	APPROVED
0	2016-08-19	ISSUED FOR BIDDING	MAL	APW	APW	RVW

CLIENT
WESTERN PLACER WASTE MANAGEMENT AUTHORITY
3033 FIDDYMENT ROAD
ROSEVILLE, CA. 95747

CONSULTANT
GOLDER ASSOCIATES, INC.
425 LAKESIDE DRIVE
SUNNYVALE, CALIFORNIA 94085
USA
+[1] (408) 220-9223
www.golder.com

PROJECT
WESTERN REGIONAL SANITARY LANDFILL
2016 GCCS EXPANSION

TITLE
METHANE PROTECTION DETAILS

PROJECT No. 1420152 | Rev. 0 | 16 of 58 | DRAWING 12

IF THIS MEASUREMENT DOES NOT MATCH WHAT IS SHOWN, THE SHEET SIZE HAS BEEN MODIFIED FROM: ANSI D

Path: \\sacramento\acad\Sites\Western Regional LF\CIVIL 3D\1420152_GCCS Expansion\Concept 2 (IFB Rev0)\ | File Name: 1418421_Flare Foundation.dwg

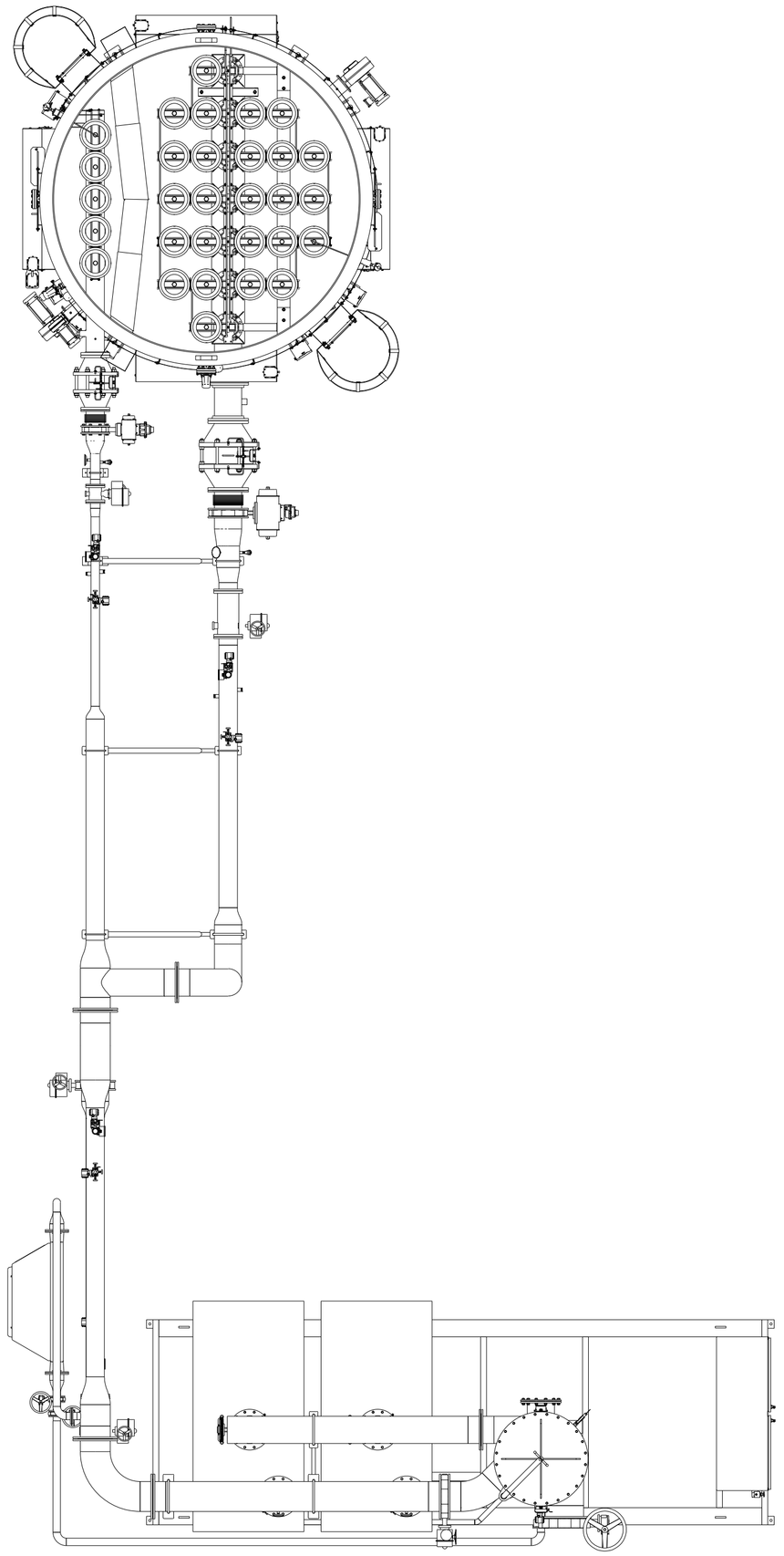

PLAN VIEW
NOT TO SCALE

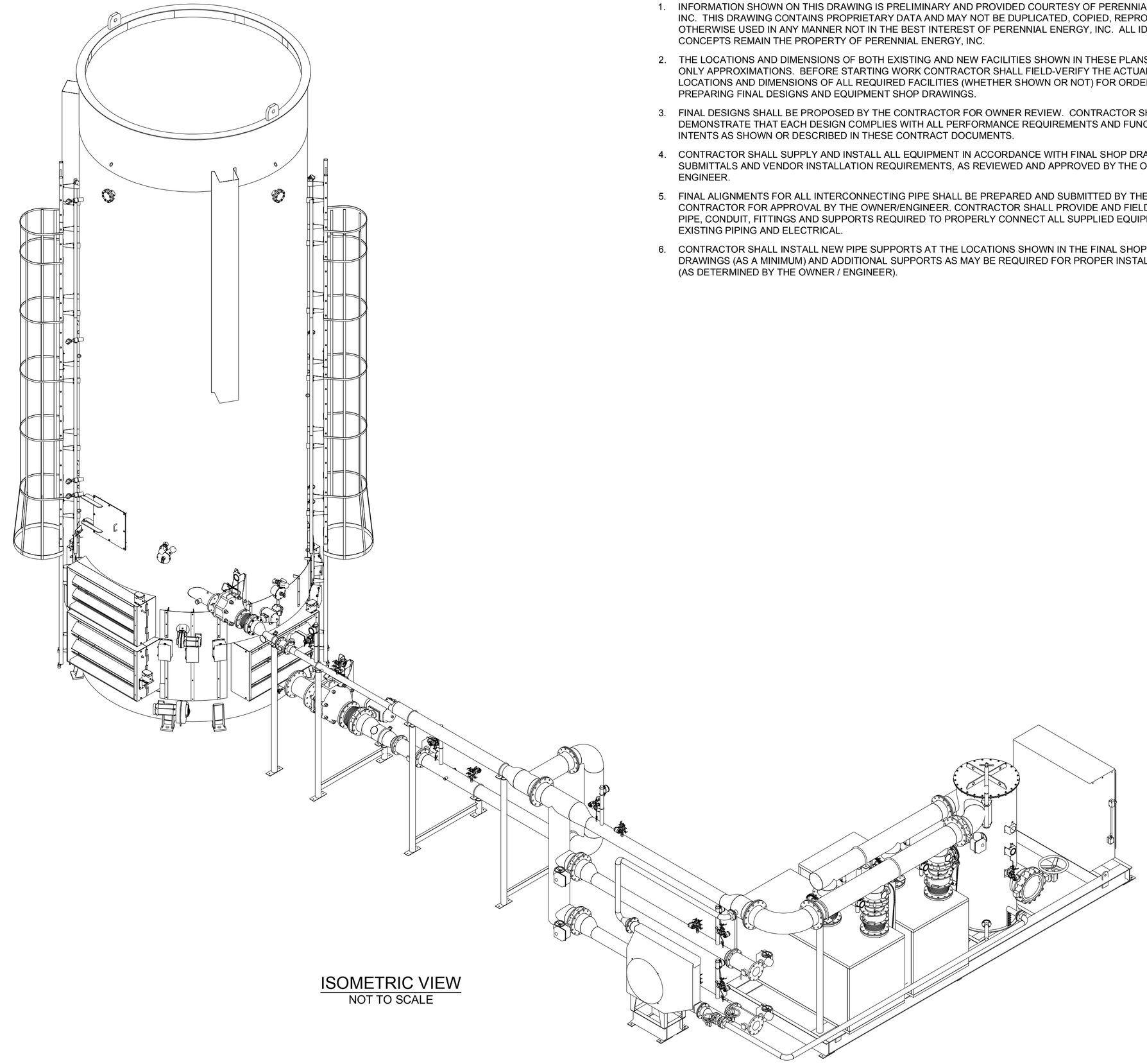

ISOMETRIC VIEW
NOT TO SCALE

NOTE(S)

1. INFORMATION SHOWN ON THIS DRAWING IS PRELIMINARY AND PROVIDED COURTESY OF PERENNIAL ENERGY, INC. THIS DRAWING CONTAINS PROPRIETARY DATA AND MAY NOT BE DUPLICATED, COPIED, REPRODUCED OR OTHERWISE USED IN ANY MANNER NOT IN THE BEST INTEREST OF PERENNIAL ENERGY, INC. ALL IDEAS AND CONCEPTS REMAIN THE PROPERTY OF PERENNIAL ENERGY, INC.
2. THE LOCATIONS AND DIMENSIONS OF BOTH EXISTING AND NEW FACILITIES SHOWN IN THESE PLANS ARE ONLY APPROXIMATIONS. BEFORE STARTING WORK CONTRACTOR SHALL FIELD-VERIFY THE ACTUAL LOCATIONS AND DIMENSIONS OF ALL REQUIRED FACILITIES (WHETHER SHOWN OR NOT) FOR ORDERING AND PREPARING FINAL DESIGNS AND EQUIPMENT SHOP DRAWINGS.
3. FINAL DESIGNS SHALL BE PROPOSED BY THE CONTRACTOR FOR OWNER REVIEW. CONTRACTOR SHALL DEMONSTRATE THAT EACH DESIGN COMPLIES WITH ALL PERFORMANCE REQUIREMENTS AND FUNCTIONAL INTENTS AS SHOWN OR DESCRIBED IN THESE CONTRACT DOCUMENTS.
4. CONTRACTOR SHALL SUPPLY AND INSTALL ALL EQUIPMENT IN ACCORDANCE WITH FINAL SHOP DRAWINGS, SUBMITTALS AND VENDOR INSTALLATION REQUIREMENTS, AS REVIEWED AND APPROVED BY THE OWNER / ENGINEER.
5. FINAL ALIGNMENTS FOR ALL INTERCONNECTING PIPE SHALL BE PREPARED AND SUBMITTED BY THE CONTRACTOR FOR APPROVAL BY THE OWNER/ENGINEER. CONTRACTOR SHALL PROVIDE AND FIELD-FIT ALL PIPE, CONDUIT, FITTINGS AND SUPPORTS REQUIRED TO PROPERLY CONNECT ALL SUPPLIED EQUIPMENT TO EXISTING PIPING AND ELECTRICAL.
6. CONTRACTOR SHALL INSTALL NEW PIPE SUPPORTS AT THE LOCATIONS SHOWN IN THE FINAL SHOP DRAWINGS (AS A MINIMUM) AND ADDITIONAL SUPPORTS AS MAY BE REQUIRED FOR PROPER INSTALLATION (AS DETERMINED BY THE OWNER / ENGINEER).

THE PROJECT WAS ORIGINALLY DESIGNED AND BID AS A REPLACEMENT OF THE BLOWER/FLARE STATION THAT INCLUDED REUSING SEVERAL COMPONENTS OF THE EXISTING FACILITIES AND 240 VAC MAIN POWER SUPPLY. THE CURRENT PROJECT, BIDDING PROCESS AND BID FORM IS BASED ON UPGRADING THE FACILITY TO USE 480 VAC POWER, REUSING VERY FEW AND SELECTED FACILITIES, AND USING A REVISED LAYOUT SHOWN ON SHEET 7A. ANY REFERENCES TO NEW 240 VAC EQUIPMENT IN THE PLANS OR SPECIFICATIONS ARE INTENDED TO BE 480 VAC.

Rev.	YYYY-MM-DD	DESCRIPTION	PREPARED	DESIGN	REVIEW	APPROVED
0	2016-08-19	ISSUED FOR BIDDING	MAL	PEI	APW	RVW

CLIENT
WESTERN REGIONAL WASTE MANAGEMENT AUTHORITY
3033 FIDDYMENT ROAD
ROSEVILLE, CA. 95747

CONSULTANT
GOLDER ASSOCIATES, INC.
425 LAKESIDE DRIVE
SUNNYVALE, CALIFORNIA 94085
USA
+[1] (408) 220-9223
www.golder.com

PROJECT
WESTERN REGIONAL SANITARY LANDFILL
2016 GCCS EXPANSION

TITLE
BLOWER-FLARE EQUIPMENT TOP ASSEMBLY

PROJECT No. 1420152
Rev. 0

DRAWING 14A

IF THIS MEASUREMENT DOES NOT MATCH WHAT IS SHOWN, THE SHEET SIZE HAS BEEN MODIFIED FROM: ANSI D

0 1 in

Path: \\sacramento\acad\Sites\Western Regional LF\CIVIL 3D\1420152_GCCS Expansion\Concept 2 (IFB Rev0) | File Name: 1420152-06_Perennial Drawings (Rev0).dwg

Parts Reference Designators

Location Designators

Ref Des	Location
ACS	Air Compressor Skid
CDS	Condensate Destruction System
CDGS	Cogeneration Skid
CP	Control Panel
CST	Condensate Storage Tank
EG	Engine Generator
FLR	Flare
GAC	Gas Analysis Cabinet
GCS	Gas Compression Skid
GHS	Gas Handling Skid
ITC	Ignition Transformer Cabinet
MCC	Motor Control Center
MISC	Loose Parts
PCS	Precooler Skid
PIP	Piping Not On Skid

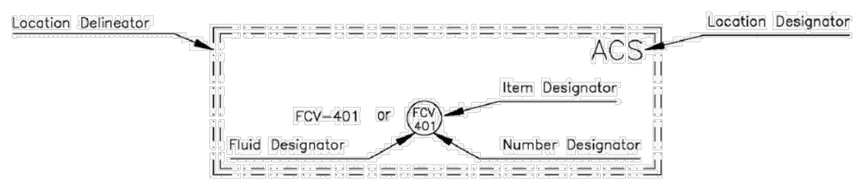

If the Reference Designator is in a bubble, then the item will be listed on that drawing's material list.
If the Reference Designator is not in a bubble, then it is referring to an item listed on another drawing's material list or it is supplied as an integral part of another item called out by a bubbled reference designator.

Fluid Designators

Ref Des	Fluid
1XX	Fossil Fuels
2XX	Oils
3XX	Biogas
4XX	Air
5XX	Combustion Exhaust
6XX	Coolants
7XX	Condensate
8XX	Inert Gases
9XX	Digester Fluids

Item Designators

Ref Des	Reference Item	Typical Usage/Description
AC	Air Conditioner	Air Conditioner
ACF	Activated Carbon Filter	Condensate Tank Vent Filter
AD	Auto Dialer	Auto Dialer
AI	Analog Input	PLC Analog Input Module
AIO	Analog Input Output	PLC Analog Input Output Module
AO	Analog Output	PLC Analog Output Module
AP	Analysis Port	Gas Sample Ports
BALL	Burner Alarm Low Low	Flame Fail Shutdown
BE	Burner Element	UV Sensor
BG	Burner Glass	View Ports
BLR	Blower	Air or Gas Blower
BN	Burner	Boiler, Hot Water Heater
BS	Burner Switch	Flame Recognition Switch
CBL	Cable	Cables, Specialty Wiring Between Devices
CGT	Combustible Gas Transmitter	LEL Transmitter
CHR	Chart Recorder	Paper or Paperless Chart Recorder
CMP	Compressor	Air or Gas Compressor
D	Diode	Diode
DI	Digital Input	PLC Digital Input Module
EDP	Electrical Distribution Panel	Load Centers, Breaker Panels
E/E	Voltage Transformer	Electrical Transformers, Power Supplies
EI	Voltage Indicator	System Voltage Monitoring
ES	Exhaust Silencer	Muffler
FAH	Flow Alarm High	High Flow Alarm
FAHH	Flow Alarm High High	High Flow Shutdown
FAL	Flow Alarm Low	Low Flow Alarm
FALL	Flow Alarm Low Low	Low Flow Shutdown
FC	Flow Controller	PID Loop Flow Controller, Burner Plug
FCV	Flow Control Valve	Actuated or Hand Modulating Valves, Dampers
FD	Fused Disconnect	Fused Disconnect
FE	Flow Element	Pitot Tube, Hot Wire Anemometer, Orifice Plate
FI	Flow Indicator	Flow Rate Gauge
FIR	Flow Indicating Recorder	Paper or Paperless Chart Recorder
FLT	Filter	Liquid or Gas Filter
FLTP	Port Filter	Unused Port Filter
FO	Flow Orifice	Flow Alarms
FQI	Flow Totalization Indicator	Chart Recorder
FSV	Flow Safety Valve	Check Valve
FT	Flow Transmitter	Flow Transmitter
FU	Fuse	Fuse
FUH	Fuse Holder	Fuse Holder
FV	Flow Valve	Open or Closed Valve not Modulating, Solenoid Valve, Shutdown Valve
FX	Flex	Expansion and Vibration Isolators, Hoses
GBK	Ground Block	Ground Block
HS	Hand Switch	Hand Operated Electrical Switches and Pushbuttons
HT	Heat Trace	Heat Trace
HTR	Heater	Electrical Heaters
HV	Hand Valve	Open or Closed Hand Operated Valve
HVP	Hand Valve Port	Gauge, Manometer and Sample Ports
I/I	Current Transformer	Alternating Current to Current Transformer
IAH	Current Alarm High	High Current Alarm
IAHH	Current Alarm High High	High Current Shutdown, Blower Overload
IAL	Current Alarm Low	Low Current Alarm, Blower Surge Alarm
IALL	Current Alarm Low Low	Low Current Shutdown, Blower Surge Shutdown
IGN	Ignitor	Spark Plugs, Spark Ignitors
II	Current Indicator	Motor Current
IIR	Current Indicating Recorder	Paper or Paperless Chart Recorder
IT	Current Transmitter	Current Transmitter
ITC	Ignitor Transformer Cabinet	Flare Ignitor
JB-HV	Junction Box-High Voltage	Interconnection Wiring
JB-LV	Junction Box-Low Voltage	Interconnection Wiring
KI	Time Indicator	Hour Meter
LAH	Level Alarm High	High Liquid Level Alarm
LAHH	Level Alarm High High	High Liquid Level Shutdown
LAL	Level Alarm Low	Low Liquid Level Alarm
LALL	Level Alarm Low Low	Low Liquid Level Shutdown
LC	Level Controller	Liquid Level Controller, Drip Trap
LCH	Level Control High	Condensate Pump Control
LCL	Level Control Low	Condensate Pump Control
LE	Level Element	Liquid Level Measuring Element, Capacitance Probe
LI	Level Indicator	Condensate Measurement
LMP	Lamp	Lights, Lamps, Beacons
LS	Level Switch	Liquid Level Switch
LT	Level Transmitter	Liquid Level Measuring Transmitter
LUB	Air Lubricator	Air Lubricator
LZ	Level controller	Air Vent
MAL	Methane Alarm Low	Low Methane Level Alarm
MALL	Methane Alarm Low Low	Low Methane Level Shutdown
MI	Methane Indicator	Methane Level Gauge
MIR	Methane Indicating Recorder	Paper or Paperless Chart Recorder
MOD	Modem	Modem
MV	Mixer Valve	Engine Carburetor
NBK	Neutral Block	Neutral Block
OAH	Oxygen Alarm High	High Oxygen Level Alarm
OAHH	Oxygen Alarm High High	High Oxygen Level shutdown
OE	Oxygen Element	Oxygen Sensor
OI	Oxygen Indicator	Oxygen Level Gauge
OIR	Oxygen Indicating Recorder	Paper or Paperless Chart Recorder
OT	Oxygen Transmitter	Oxygen Level Transmitter
PAH	Pressure Alarm High	High Pressure Alarm
PAHH	Pressure Alarm High High	High Pressure Shutdown
PAL	Pressure Alarm Low	Low Pressure Alarm
PALL	Pressure Alarm Low Low	Low Pressure Shutdown
PC	Pressure Controller	PID Loop Pressure Controller, Valve Operator Logic
PCV	Pressure Control Valve	Regulators, Actuated or Hand Modulating Valves
PDI	Pressure Differential Indicator	Differential Pressure Gauge
PDT	Pressure Differential Transmitter	DP Flow Meter
PH	Phone	Phone
PI	Pressure Indicator	Pressure Gauge
PIA	Pressure Indicator & Alarm	Pressure Gauge w/Switch
PIR	Pressure Indicating Recorder	Paper or Paperless Chart Recorder
PLC	Programmable Logic Controller	Programmable Logic Controller
PLT	Pilot	Pilot Mixing Assembly
PMP	Pump	Liquid Pump
PR	Pressure Recorder	Paper or Paperless Recorder
PS	Pressure Switch	Pressure Switch
PSE	Pressure Safety Element	Rupture Disk
PT	Pressure Transmitter	Pressure Transmitter
R	Relay	Control Relay
RCP	Receptacle	Electrical Receptacle
RES	Resistor	Resistor
RM	Relay Module	PLC Relay Module
SGN	Sign	Sign
SI	Speed Indicator	Speed or Frequency Meter
SSR	Surge Arrestor	Surge Protectors, Lightning Arrestors
TAH	Temperature Alarm High	High Temperature Alarm
TAHH	Temperature Alarm High High	High Temperature Shutdown
TAL	Temperature Alarm Low	Low Temperature Alarm
TALL	Temperature Alarm Low Low	Low Temperature Shutdown
TB	Terminal Block	Terminal Block
TC	Temperature Controller	Thermostat
TCV	Temperature Control Valve	Control Valves
TE	Temperature Element	Thermocouple, RTD, Thermister
TES	Temperature Element Switch	Thermocouple Switch
TEV	Thermostatic Expansion Valve	Thermostatic Expansion Valve
TEW	Temperature Element Well	Port for Thermocouple, RTD or Thermister
TI	Temperature Indicator	Temperature Gauge
TIA	Temperature Indicator & Alarm	Temperature Gauge w/Switch
TIR	Temperature Indicator Recorder	Paper or Paperless Chart Recorder
TK	Tank	Propane Tank, Condensate Storage Tank
TSE	Temperature Safety Element	Flame Arrestor, Flame Check
TSV	Temperature Safety Valve	Valved Fusible Link
TT	Temperature Transmitter	Temperature Transmitter
TX	Heat Exchanger	Heat Exchanger
UPS	Uninterruptable Power Supply	Uninterruptable Power Supply
VAH	Vibration Alarm High	High Vibration Alarm
VAHH	Vibration Alarm High High	High Vibration Shutdown
VFD	Variable Frequency Drive	Variable Frequency Drive
VI	Vibration Indicator	Vibration Gauge
VIR	Vibration Indicating Recorder	Paper or Paperless Chart Recorder
VT	Vibration Transmitter	Vibration Transmitter
YASD	Event Alarm	VFD Faults
YI	Event Indicator	Run Lamps
YIC	Event Indicator Controller	Touch Screens, Setpoint/Display Panels, VFD Keypads, UV Sensor Interface Panels
ZA	Position Alarm	Valve Fail To Open, Close
ZC	Position Controller	PID Loop Position Controller
ZI	Position Indicator	Valve or Damper Position Indicator
ZS	Position Switch	Valve Open, Close Switches

This Drawing Contains Proprietary Data Provided by Perennial Energy LLC and is Used With Permission. This Drawing and Data May Not Be Duplicated, Copied, Reproduced or Otherwise Used In Any Manner Not in the Best Interest of Perennial Energy LLC. All Ideas and Concepts Remain the Property of Perennial Energy LLC.

THE PROJECT WAS ORIGINALLY DESIGNED AND BID AS A REPLACEMENT OF THE BLOWER/FLARE STATION THAT INCLUDED REUSING SEVERAL COMPONENTS OF THE EXISTING FACILITIES AND 240 VAC MAIN POWER SUPPLY. THE CURRENT PROJECT, BIDDING PROCESS AND BID FORM IS BASED ON UPGRADING THE FACILITY TO USE 480 VAC POWER, REUSING VERY FEW AND SELECTED FACILITIES, AND USING A REVISED LAYOUT SHOWN ON SHEET 7A. ANY REFERENCES TO NEW 240 VAC EQUIPMENT IN THE PLANS OR SPECIFICATIONS ARE INTENDED TO BE 480 VAC.

Rev.	YYYY-MM-DD	DESCRIPTION	PREPARED	DESIGN	REVIEW	APPROVED
0	2016-08-19	ISSUED FOR BIDDING	MAL	APW	APW	RVW

CLIENT
WESTERN PLACER WASTE MANAGEMENT AUTHORITY
3033 FIDDYMENT ROAD
ROSEVILLE, CA. 95747

CONSULTANT
GOLDER ASSOCIATES, INC.
425 LAKESIDE DRIVE
SUNNYVALE, CALIFORNIA 94085
USA
+[1] (408) 220-9223
www.golder.com

PROJECT
WESTERN REGIONAL SANITARY LANDFILL
2016 GCCS EXPANSION

TITLE
BLOWER/ FLARE EQUIPMENT P&ID LEGEND

PROJECT No. 1420152 | Rev. 0 | | DRAWING 15

IF THIS MEASUREMENT DOES NOT MATCH WHAT IS SHOWN, THE SHEET SIZE HAS BEEN MODIFIED FROM: ANSI D

0 1 in

Path: \\sacramento\acad\Sites\Western Regional LF\CIVIL 3D\1420152_GCCS Expansion\Concept 2 (IFB Rev0)\ | File Name: 1420152-06_Perennial Drawings [Rev B].dwg

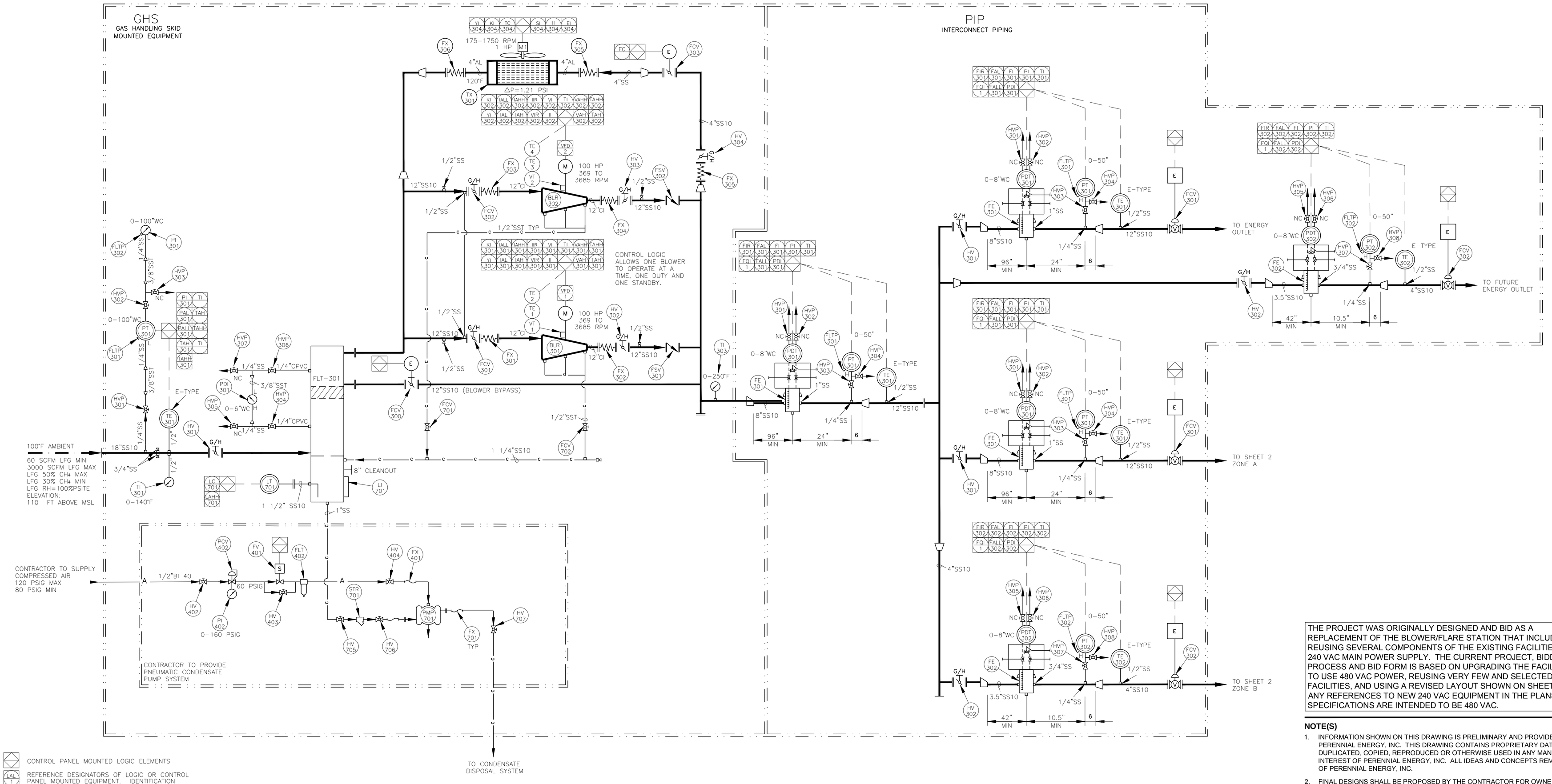

CONTROL PANEL MOUNTED LOGIC ELEMENTS

REFERENCE DESIGNATORS OF LOGIC OR CONTROL PANEL MOUNTED EQUIPMENT. IDENTIFICATION LETTERS CONFORM TO ISA'S INSTRUMENTATION SYMBOLS AND IDENTIFICATION MANUAL TABLE #1

PIPING MATERIALS LEGEND

AL: ALUMINUM	10: SCH 10 PIPE
BI: BLACK IRON	40: SCH 40 PIPE
CI: CAST IRON	80: SCH 80 PIPE
CPVC: CHLORO POLYVINYL CHLORIDE	H: I.D. HOSE
CS: CARBON STEEL	T: O.D. TUBING
EPDM: ETHYLENE PROPYLENE DIENE MONOMER	
FB: FIBERGLASS	
GS: GALVANIZED STEEL	
HDPE: HIGH DENSITY POLYETHYLENE	
SS: STAINLESS STEEL	
PVC: POLYVINYL CHLORIDE	

(EXAMPLE: 6"AL40 = 6" ALUMINUM SCHEDULE 40 PIPE)

P&ID LINES LEGEND

- ELECTRICAL CONNECTIONS
- INSULATION
- MAIN PIPING
- SUB PIPING
- CONDENSATE PIPING
- COMPRESSED AIR PIPING
- CUSTOMER SUPPLIED PIPING
- PEI SCOPE OF PROJECT

PID LOOPS

LOOP #	NAME	CONTROLLED ELEMENT	CONTROLLER, OUTPUT ELEMENT	PROCESS VARIABLE, UNITS	PV SENSOR
1	LANDFILL VACUUM CONTROL	FCV-301,2	PLC, AO1-CH?	LANDFILL VACUUM, 0.0 INWC	PT-301
2	LANDFILL FLOW CONTROL	FCV-301,2	PLC, AO1-CH?	LFG FLOWRATE, SCFM	TOTAL MASS FLOW
3	FLARE ZONE A TEMPERATURE CONTROL	FCV-401,2	PLC, AO1-CH?	FLARE ZONE A TEMPERATURE, °F	SELECTED FLARE ZONE A THERMOCOUPLE
4	FLARE ZONE B TEMPERATURE CONTROL	FCV-403,4,5,6	PLC, AO1-CH?	FLARE ZONE B TEMPERATURE, °F	SELECTED FLARE ZONE B THERMOCOUPLE

THE PROJECT WAS ORIGINALLY DESIGNED AND BID AS A REPLACEMENT OF THE BLOWER/FLARE STATION THAT INCLUDED REUSING SEVERAL COMPONENTS OF THE EXISTING FACILITIES AND 240 VAC MAIN POWER SUPPLY. THE CURRENT PROJECT, BIDDING PROCESS AND BID FORM IS BASED ON UPGRADING THE FACILITY TO USE 480 VAC POWER, REUSING VERY FEW AND SELECTED FACILITIES, AND USING A REVISED LAYOUT SHOWN ON SHEET 7A. ANY REFERENCES TO NEW 240 VAC EQUIPMENT IN THE PLANS OR SPECIFICATIONS ARE INTENDED TO BE 480 VAC.

NOTE(S)

1. INFORMATION SHOWN ON THIS DRAWING IS PRELIMINARY AND PROVIDED COURTESY OF PERENNIAL ENERGY, INC. THIS DRAWING CONTAINS PROPRIETARY DATA AND MAY NOT BE DUPLICATED, COPIED, REPRODUCED OR OTHERWISE USED IN ANY MANNER NOT IN THE BEST INTEREST OF PERENNIAL ENERGY, INC. ALL IDEAS AND CONCEPTS REMAIN THE PROPERTY OF PERENNIAL ENERGY, INC.
2. FINAL DESIGNS SHALL BE PROPOSED BY THE CONTRACTOR FOR OWNER REVIEW. CONTRACTOR SHALL DEMONSTRATE THAT EACH DESIGN COMPLIES WITH ALL PERFORMANCE REQUIREMENTS AND FUNCTIONAL INTENTS AS SHOWN OR DESCRIBED IN THESE CONTRACT DOCUMENTS.
3. CONTRACTOR SHALL SUPPLY AND INSTALL ALL EQUIPMENT IN ACCORDANCE WITH FINAL SHOP DRAWINGS, SUBMITTALS AND VENDOR INSTALLATION REQUIREMENTS, AS REVIEWED AND APPROVED BY THE OWNER / ENGINEER.
4. CONTRACTOR SHALL INTEGRATE NEW EQUIPMENT CONTROLS AND DATA OUTPUT WITH EXISTING SCADA SYSTEM, NEW SCADA SYSTEM AND BACK-UP DATA RECORDER AS DESCRIBED IN THESE CONTRACT DOCUMENTS. SEE TECHNICAL SPECIFICATIONS FOR SUMMARY OF SYSTEMS CONTROL LOGIC AND CONTROLS INTEGRATION REQUIREMENTS.
5. CONTRACTOR SHALL PROVIDE AND COORDINATE SCADA PROGRAMMING, INCLUDING PROVIDING HUMAN MACHINE INTERFACE (HMI) FOR REMOTE INTERNET AND MOBILE ACCESS TO SYSTEM FOR TRANSFERRING MONITORING DATA, VIEWING EQUIPMENT AND PROCESS STATUS, AND MAKING PROCESS ADJUSTMENTS.

Rev.	YYYY-MM-DD	DESCRIPTION	PREPARED	DESIGN	REVIEW	APPROVED
0	2016-08-19	ISSUED FOR BIDDING	MAL	APW	APW	RVW

CLIENT
WESTERN PLACER WASTE MANAGEMENT AUTHORITY
3033 FIDDYMENT ROAD
ROSEVILLE, CA. 95747

CONSULTANT
GOLDER ASSOCIATES, INC.
425 LAKESIDE DRIVE
SUNNYVALE, CALIFORNIA 94085
USA
+[1] (408) 220-9223
www.golder.com

PROJECT
WESTERN REGIONAL SANITARY LANDFILL
2016 GCCS EXPANSION

TITLE
BLOWER/ FLARE CONCEPTUAL EQUIPMENT P&ID (1 OF 2)

PROJECT No. 1420152 | Rev. 0 | 22 of 58 | DRAWING 16A

IF THIS MEASUREMENT DOES NOT MATCH WHAT IS SHOWN, THE SHEET SIZE HAS BEEN MODIFIED FROM: ANSI D

Path: \\sacramento\acad\Sites\Western Regional LF\CIVIL 3D\1420152_GCCS Expansion\Concept 2 (IIFB Rev0)\ | File Name: 1420152-06_Perennial Drawings (Rev0).dwg

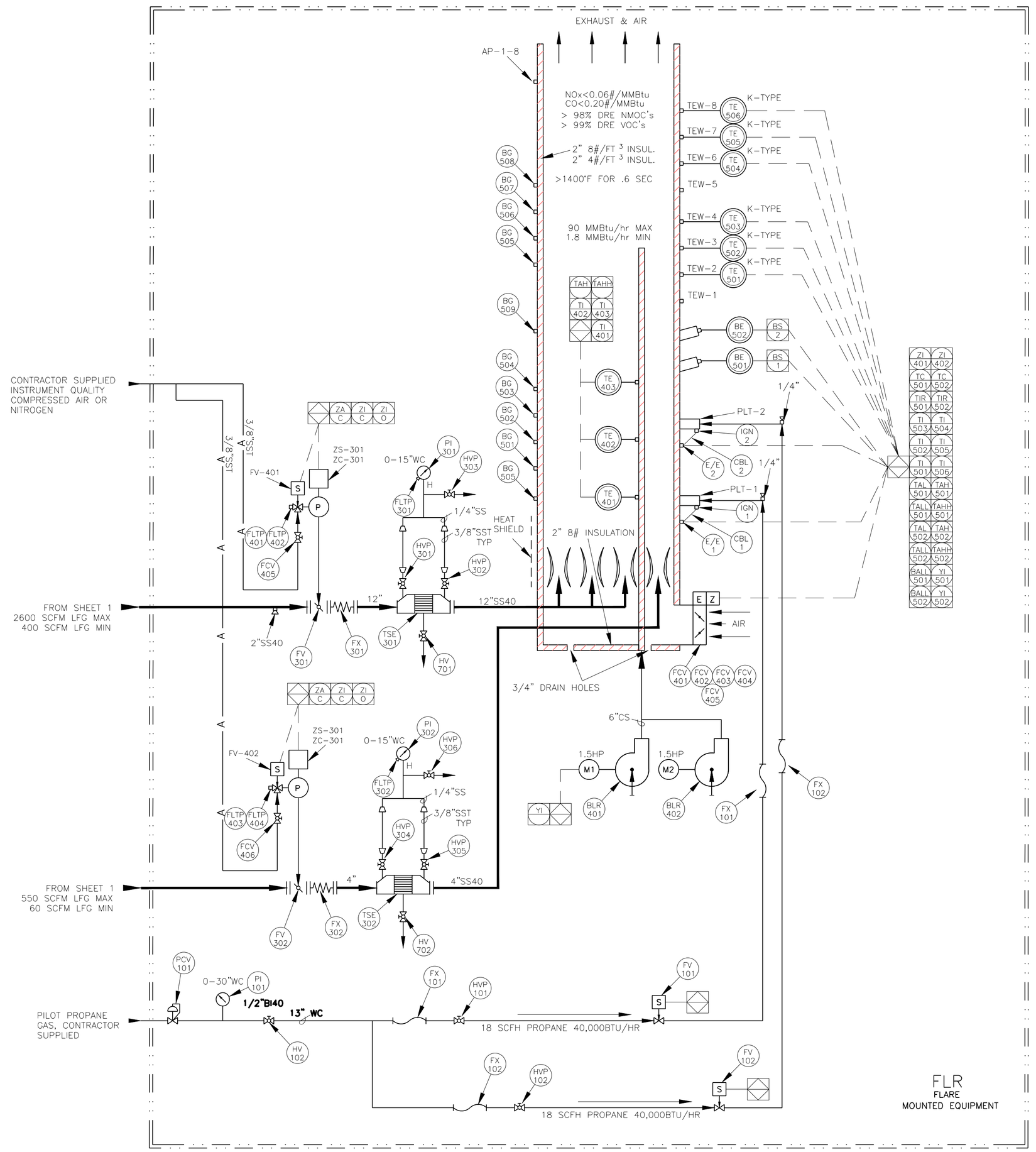

THE PROJECT WAS ORIGINALLY DESIGNED AND BID AS A REPLACEMENT OF THE BLOWER/FLARE STATION THAT INCLUDED REUSING SEVERAL COMPONENTS OF THE EXISTING FACILITIES AND 240 VAC MAIN POWER SUPPLY. THE CURRENT PROJECT, BIDDING PROCESS AND BID FORM IS BASED ON UPGRADING THE FACILITY TO USE 480 VAC POWER, REUSING VERY FEW AND SELECTED FACILITIES, AND USING A REVISED LAYOUT SHOWN ON SHEET 7A. ANY REFERENCES TO NEW 240 VAC EQUIPMENT IN THE PLANS OR SPECIFICATIONS ARE INTENDED TO BE 480 VAC.

NOTE(S)

1. INFORMATION SHOWN ON THIS DRAWING IS PRELIMINARY AND PROVIDED COURTESY OF PERENNIAL ENERGY, INC. THIS DRAWING CONTAINS PROPRIETARY DATA AND MAY NOT BE DUPLICATED, COPIED, REPRODUCED OR OTHERWISE USED IN ANY MANNER NOT IN THE BEST INTEREST OF PERENNIAL ENERGY, INC. ALL IDEAS AND CONCEPTS REMAIN THE PROPERTY OF PERENNIAL ENERGY, INC.
2. FINAL DESIGNS SHALL BE PROPOSED BY THE CONTRACTOR FOR OWNER REVIEW. CONTRACTOR SHALL DEMONSTRATE THAT EACH DESIGN COMPLIES WITH ALL PERFORMANCE REQUIREMENTS AND FUNCTIONAL INTENTS AS SHOWN OR DESCRIBED IN THESE CONTRACT DOCUMENTS.
3. CONTRACTOR SHALL SUPPLY AND INSTALL ALL EQUIPMENT IN ACCORDANCE WITH FINAL SHOP DRAWINGS, SUBMITTALS AND VENDOR INSTALLATION REQUIREMENTS, AS REVIEWED AND APPROVED BY THE OWNER / ENGINEER.
4. CONTRACTOR SHALL INTEGRATE NEW EQUIPMENT CONTROLS AND DATA OUTPUT WITH EXISTING SCADA SYSTEM, NEW SCADA SYSTEM AND BACK-UP DATA RECORDER AS DESCRIBED IN THESE CONTRACT DOCUMENTS. SEE TECHNICAL SPECIFICATIONS FOR SUMMARY OF SYSTEMS CONTROL LOGIC AND CONTROLS INTEGRATION REQUIREMENTS.
5. CONTRACTOR SHALL PROVIDE AND COORDINATE SCADA PROGRAMMING, INCLUDING PROVIDING HUMAN MACHINE INTERFACE (HMI) FOR REMOTE INTERNET AND MOBILE ACCESS TO SYSTEM FOR TRANSFERRING MONITORING DATA, VIEWING EQUIPMENT AND PROCESS STATUS, AND MAKING PROCESS ADJUSTMENTS.

Rev.	YYYY-MM-DD	DESCRIPTION	PREPARED	DESIGN	REVIEW	APPROVED
0	2016-08-19	ISSUED FOR BIDDING	MAL	APW	APW	RVW

CLIENT
WESTERN PLACER WASTE MANAGEMENT AUTHORITY
3033 FIDDYMENT ROAD
ROSEVILLE, CA. 95747

CONSULTANT
GOLDER ASSOCIATES, INC.
425 LAKESIDE DRIVE
SUNNYVALE, CALIFORNIA 94085
USA
+[1] (408) 220-9223
www.golder.com

PROJECT
WESTERN REGIONAL SANITARY LANDFILL
2016 GCCS EXPANSION

TITLE
BLOWER/ FLARE EQUIPMENT P&ID
(2 OF 2)

PROJECT No. 1420152 | Rev. 0 | 23 of 58 | DRAWING 17

Path: \\sacramento\acad\Sites\Western Regional LF\CIVIL 3D\1420152_GCCS Expansion\Concept 2 (IFB Rev0)\ | File Name: 1420152-06_Perennial Drawings [Rev B].dwg

IF THIS MEASUREMENT DOES NOT MATCH WHAT IS SHOWN, THE SHEET SIZE HAS BEEN MODIFIED FROM: ANSI D

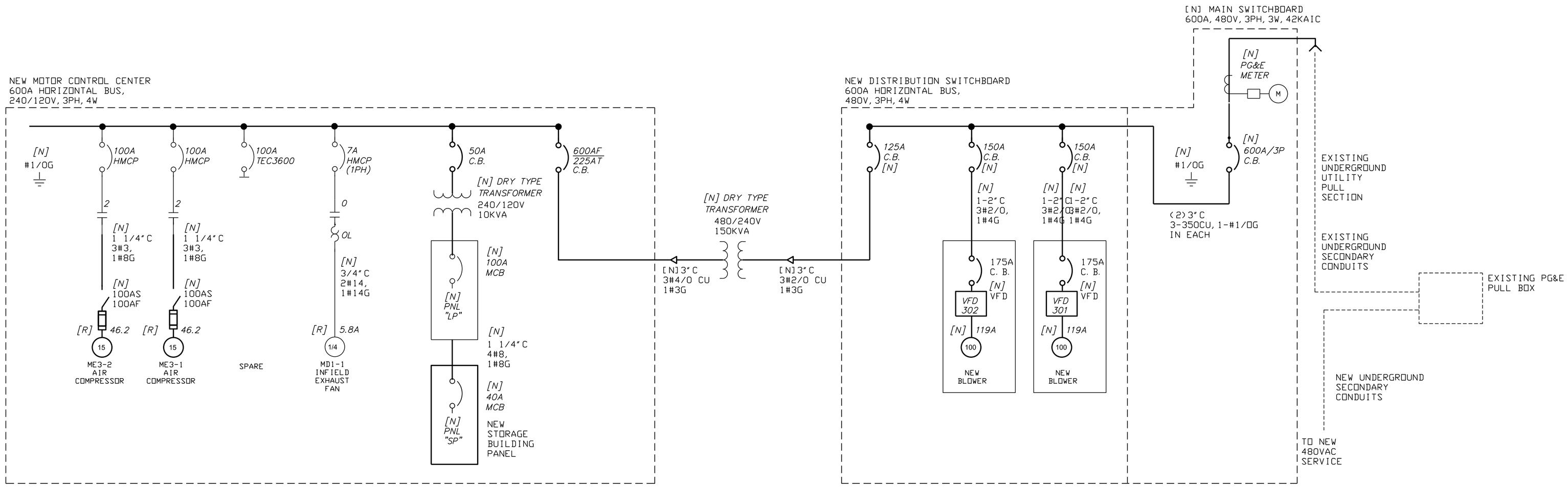

ELECTRICAL ONE LINE DIAGRAM

Western Placer Waste Management
Authority Land Fill Gas Flare Load Study
480V

BLR-301	Blower	100 HP	480V, 3PH	130.0 FLA	108.08 KVA
BLR-302	Blower	100 HP	480V, 3PH	130.0 FLA	108.08 KVA
	25% Of Largest Motor			32.5 FLA	27 KVA
				292.5 FLA	243.16 KVA

Western Placer Waste Management
Authority Land Fill Gas Flare Load Study
240/120V

M-E3-2	Air Compressor No. 2	15 HP	240V, 3PH	.0 FLA	.00 KVA
M-E3-1	Air Compressor No. 1	15 HP	240V, 3PH	42.0 FLA	17.43 KVA
M-D1-1	Blower Exhaust Fan	.25 HP	240V, 1PH	2.9 FLA	.67 KVA
M-A2-2	Demister Pump 2	.33 HP	240V, 1PH	3.6 FLA	.83 KVA
M-C2-1	Demister Pump 1	.33 HP	240V, 1PH	3.6 FLA	.83 KVA
BLR-3	Blower	75 HP	240V, 3PH	192.0 FLA	79.68 KVA
	Panel LP		240V 3Ph	25 A	10 KVA
	25% Of Largest Motor			48.0 FLA	20 KVA
				317.1 FLA	129.42 KVA

THE PROJECT WAS ORIGINALLY DESIGNED AND BID AS A REPLACEMENT OF THE BLOWER/FLARE STATION THAT INCLUDED REUSING SEVERAL COMPONENTS OF THE EXISTING FACILITIES AND 240 VAC MAIN POWER SUPPLY. THE CURRENT PROJECT, BIDDING PROCESS AND BID FORM IS BASED ON UPGRADING THE FACILITY TO USE 480 VAC POWER. REUSING VERY FEW AND SELECTED FACILITIES. AND USING A REVISED LAYOUT SHOWN ON SHEET 7A. ANY REFERENCES TO NEW 240 VAC EQUIPMENT IN THE PLANS OR SPECIFICATIONS ARE INTENDED TO BE 480 VAC.

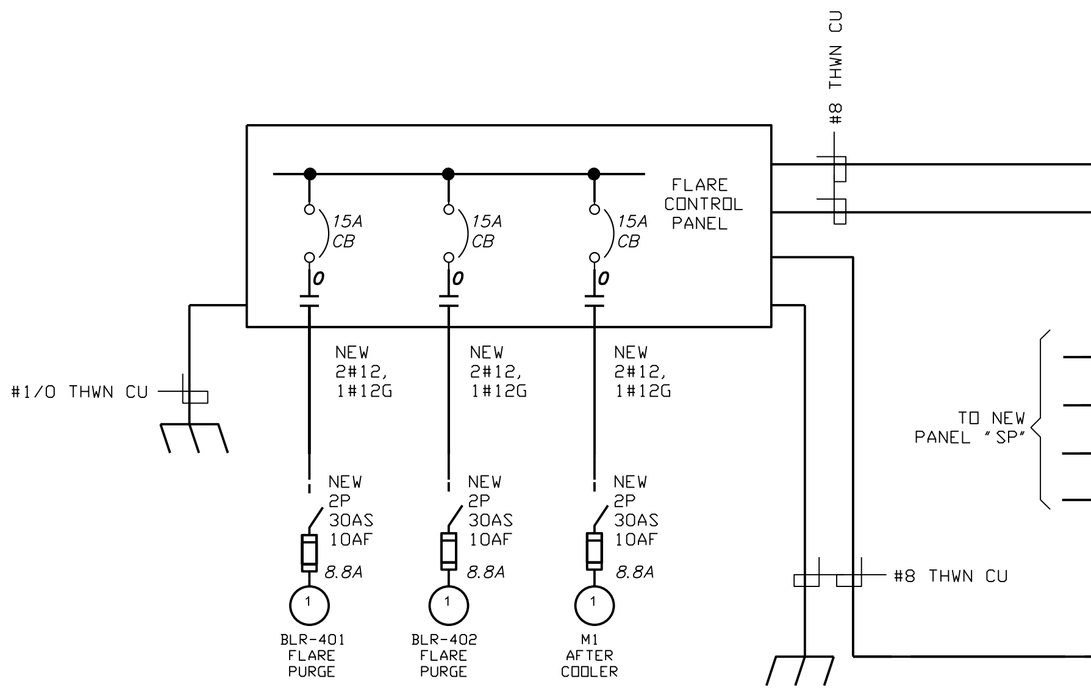

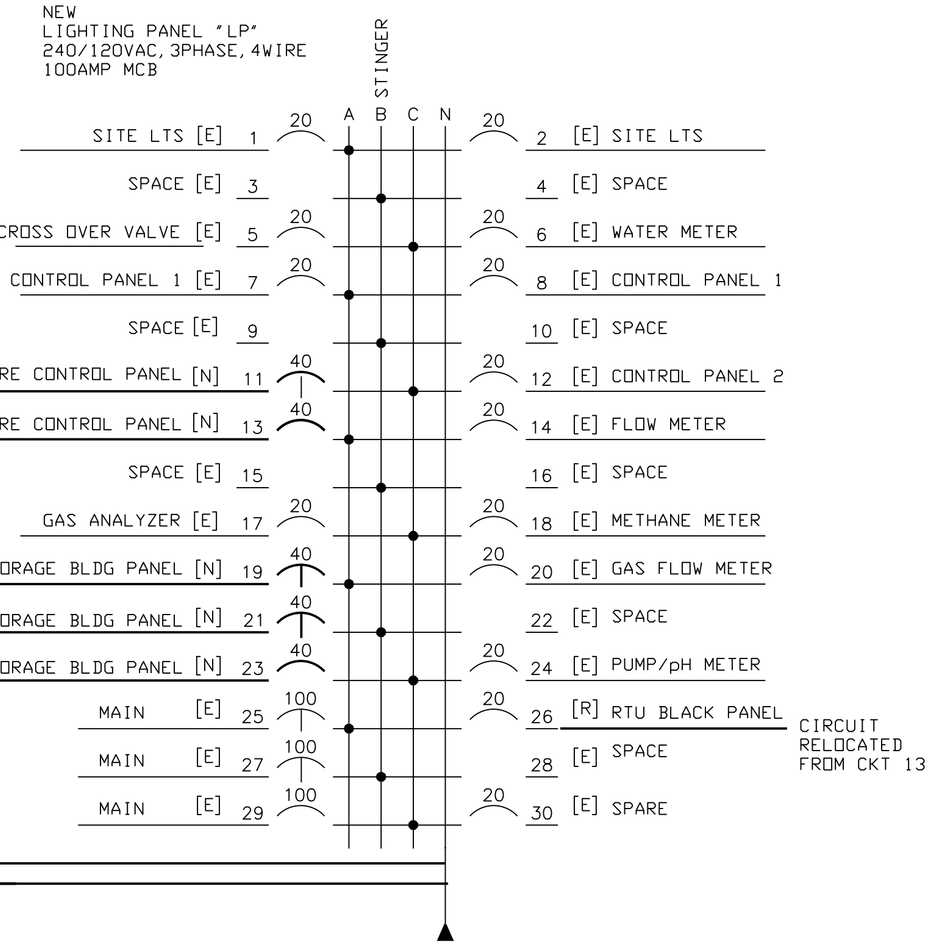

PANEL SCHEDULE

Rev.	YYYY-MM-DD	DESCRIPTION	PREPARED	DESIGN	REVIEW	APPROVED
A	2016-08-11	ISSUED FOR BID	SMA	JR	APW	JR

CLIENT
WESTERN PLACER WASTE MANAGEMENT AUTHORITY

CONSULTANT
Golder Associates

Golder Associates Inc.
425 Lakeside Drive
Sunnyvale, California 94085
USA
408-220-9223
www.golder.com

PROJECT
WESTERN REGIONAL SANITARY LANDFILL
2016 GCCS EXPANSION

TITLE
BLOWER FLARE MODIFICATIONS
ELECTRICAL ONE LINE DIAGRAM

PROJECT No. 1420152 | Rev. 1 | 25 of 48 | DRAWING E1A

Path: \\walnutcreek\acad\Sites\142-0152 WPWMA\PRODUCTION\ELECTRICAL\ | File Name: WPWMA FLARE E1A.dwg
0 1 in IF THIS MEASUREMENT DOES NOT MATCH WHAT IS SHOWN, THE SHEET SIZE HAS BEEN MODIFIED FROM: ANSI D

GENERAL NOTES

1. EQUIPMENT LAYOUT IS GENERALLY DIAGRAMMATIC, THE SIZE AND LOCATIONS OF DEVICES SHOWN ON THESE DRAWINGS SHALL BE VERIFIED. ROUTING OF WIRING SHALL BE GOVERNED BY ACTUAL CONDITIONS.
2. MOTOR CONTROL CENTER SHALL BE PROVIDED WITH ALL NECESSARY ASSEMBLIES, COMPONENTS, CONTROLLERS, PUSHBUTTONS, NAMEPLATES, TERMINAL BLOCKS AND ASSOCIATED WIRING NECESSARY TO COMPLETE THE PROJECT.
3. MOTOR WIRING AND FIELD CONTROL WIRING SHALL FEED THRU TERMINAL BLOCKS OR MARSHALLING PANELS, MCC WIRING SHALL MEET NEMA TYPE IIC REQUIREMENTS. CONTROL WIRING SHALL BE POWER LIMITED, TYPE MTW, #14AWG CU, 600V, UL1015.
4. ENDS OF CONTROL WIRING SHALL HAVE HEAT-SHRINK TYPE TAGS AT BOTH ENDS. TAGS SHALL DENOTE WIRE DESIGNATIONS.
5. ELECTRICAL CONTRACTOR SHALL ARRANGE WITH PG&E TO LOCK OUT THE INCOMING ELECTRICAL SERVICE DURING MAIN BREAKER CHANGE OVER.
6. [N]COOLING FAN AND [N]FLARE PURGE BLOWERS FED FROM [N] FLARE CONTROL PANEL.
7. PROVIDE AND INSTALL NEW NAMEPLATES AND ATTACH TO FRONT OF CUBICAL DOORS.

NUMBERED NOTES

(1) MAIN SWITCHBOARD, 600-AMP, 480V-VOLT, 3-PHASE, 3-WIRE, 42KAIC. DISCONNECT AND REMOVE EXISTING 400 AMP MAIN CIRCUIT BREAKER. PROVIDE AND INSTALL NEW 600 AMP MOLDED CASE G.E. SPECTRA ELECTRONIC TRIP MAIN CIRCUIT BREAKER, 100% CONTINUOUS RATED. RECONNECT TO EXISTING LINE AND LOAD SIDE CIRCUITRY. PROVIDE NEW TRIP PLUG, MOUNTING HARDWARE, LOAD SIDE LUGS AND ENCLOSURE FRONT PANEL AS NECESSARY. PROVIDE AND INSTALL NEW PARALLEL 350KCmil CU. CONDUCTORS FROM NEW BREAKER TO MCC IF REQUIRED.

(2) PROVIDE AND INSTALL NEW 600AF 200AT, 3POLE, 480VAC MOLDED CASE CIRCUIT BREAKER IN NEW DISTRIBUTION BOARD. MATCH VFD RECOMMENDATION. PROVIDE NEW DOOR WITH NEW LOCKABLE SWITCH AND HANDLE.

(3) DISCONNECT EXISTING AIR COMPRESSOR No. 1 (ME3-1). RECONNECT RELOCATED AIR COMPRESSOR No. 1 (ME3-1).

(4) DISCONNECT EXISTING AIR COMPRESSOR No. 2 (ME3-2). RECONNECT RELOCATED AIR COMPRESSOR No. 2 (ME3-2).

(5) PROVIDE AND INSTALL #1/0 BARE COPPER GROUND CABLE AND CONNECT EQUIPMENT TOGETHER TO FORM A CONTINUOUS GROUND NETWORK. CONNECT GROUND CABLE TO THE [N]MCC, [N]GROUND RODS, [N]FLR SKID, [N]PIP SKID, AND [N]BLOWER MOTORS. USE [N]NEMA ONE HOLE COMPRESSION LUGS AT EQUIPMENT. USE [N] EXOTHERMIC MOLDS AT TEES. CABLE BENDS SHALL MEET NEC 312.6(b)

(6) DISCONNECT EXISTING EXHAUST FAN (MD1-3). RECONNECT RELOCATED EXHAUST FAN RELABELED AS (MD1-1).

(7) CORRUGATED METAL ROOF STRUCTURE TO BE 25' LENGHT BY 9' WIDE. ROOF OVERHANGS SHALL HAVE SCREENED GUTTERS AND DOWNSPOUTS AT CORNERS OF ROOF. BUILDINGS CONTRACTOR TO PROVIDE FINAL DETAILS OF GUTTERS DOWNSPOUTS AND OTHER SHEET METAL ACCESSORIES AND METHODS OF JOINING AND ANCHORAGES. ROOF PANELS SHALL BE 24 GAUGE, G-90 ZINC-COATED (GALVANIZED) STEEL, CONFORMING TO ASTM A653, GRADE 50, 24 INCH OR 36 INCH WIDE STANDING SEAM METAL ROOF PANELS ATTACHED WITH CONCEALED SELF-TAPPING FASTENERS AT SUPPORTS AND MECHANICALLY SEAMED SIDE LAP JOINTS.

THE PROJECT WAS ORIGINALLY DESIGNED AND BID AS A REPLACEMENT OF THE BLOWER/FLARE STATION THAT INCLUDED REUSING SEVERAL COMPONENTS OF THE EXISTING FACILITIES AND 240 VAC MAIN POWER SUPPLY. THE CURRENT PROJECT, BIDDING PROCESS AND BID FORM IS BASED ON UPGRADING THE FACILITY TO USE 480 VAC POWER. REUSING VERY FEW AND SELECTED FACILITIES. AND USING A REVISED LAYOUT SHOWN ON SHEET 7A. ANY REFERENCES TO NEW 240 VAC EQUIPMENT IN THE PLANS OR SPECIFICATIONS ARE INTENDED TO BE 480 VAC.

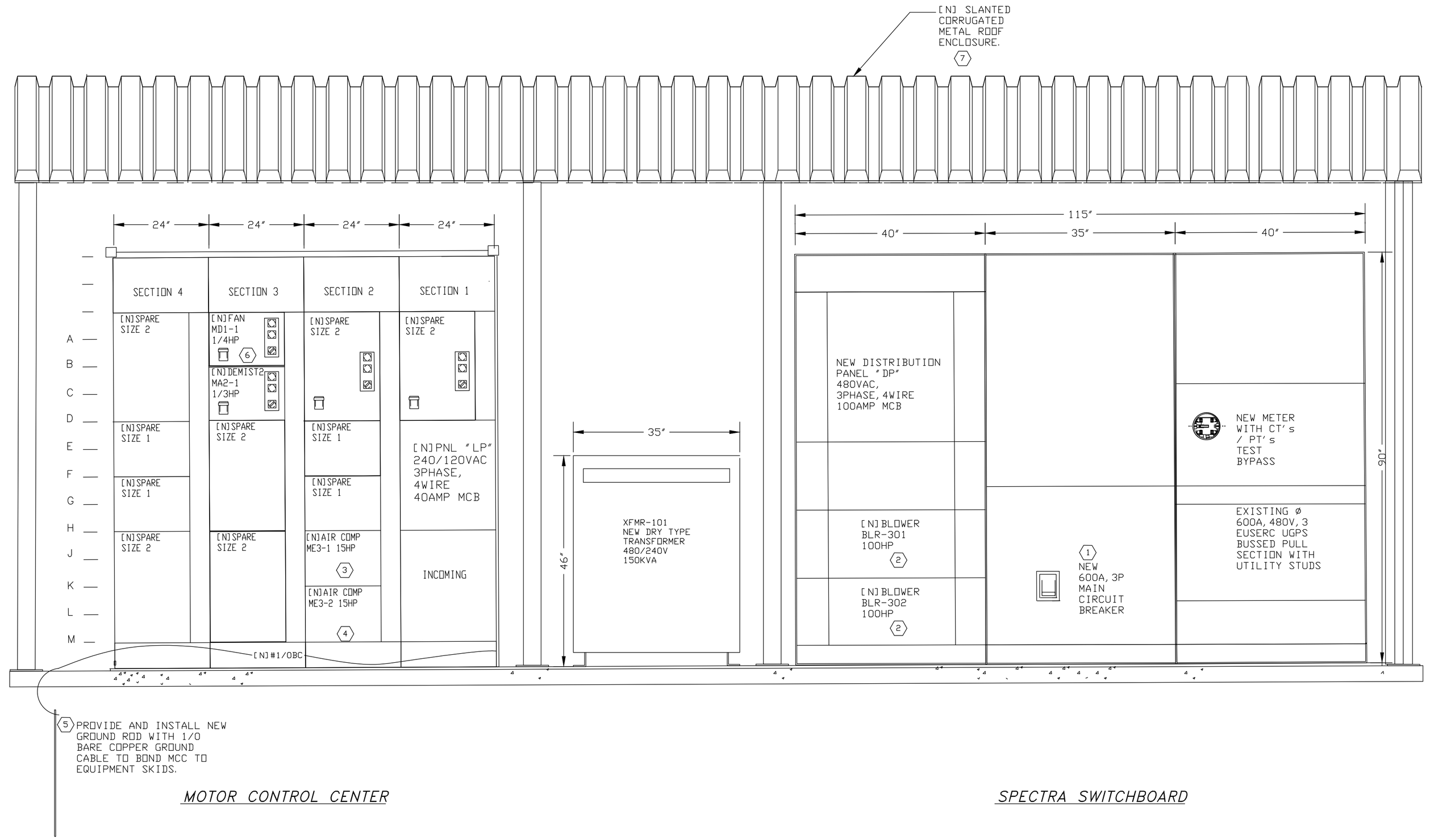

MOTOR CONTROL CENTER

SPECTRA SWITCHBOARD

Rev.	YYYY-MM-DD	DESCRIPTION	PREPARED	DESIGN	REVIEW	APPROVED
A	2016-08-11	ISSUED FOR BID	SMA	JR	APW	JR

CLIENT
WESTERN PLACER WASTE MANAGEMENT AUTHORITY

CONSULTANT
Golder Associates

Golder Associates Inc.
425 Lakeside Drive
Sunnyvale, California 94085
USA
408-220-9223
www.golder.com

PROJECT
WESTERN REGIONAL SANITARY LANDFILL
2016 GCCS EXPANSION

TITLE
BLOWER FLARE MODIFICATIONS
ELECTRICAL MOTOR CONTROL CENTER

PROJECT No.	Rev.	27 of 58	DRAWING
1420152	1		E2A

IF THIS MEASUREMENT DOES NOT MATCH WHAT IS SHOWN, THE SHEET SIZE HAS BEEN MODIFIED FROM: ANSI D

0 1 in

Path: \\wabutzreek\acad\Sites\1142-0152 WPWMA\PRODUCTION\ELECTRICAL\ | File Name: WPWMA FLARE E2A.dwg

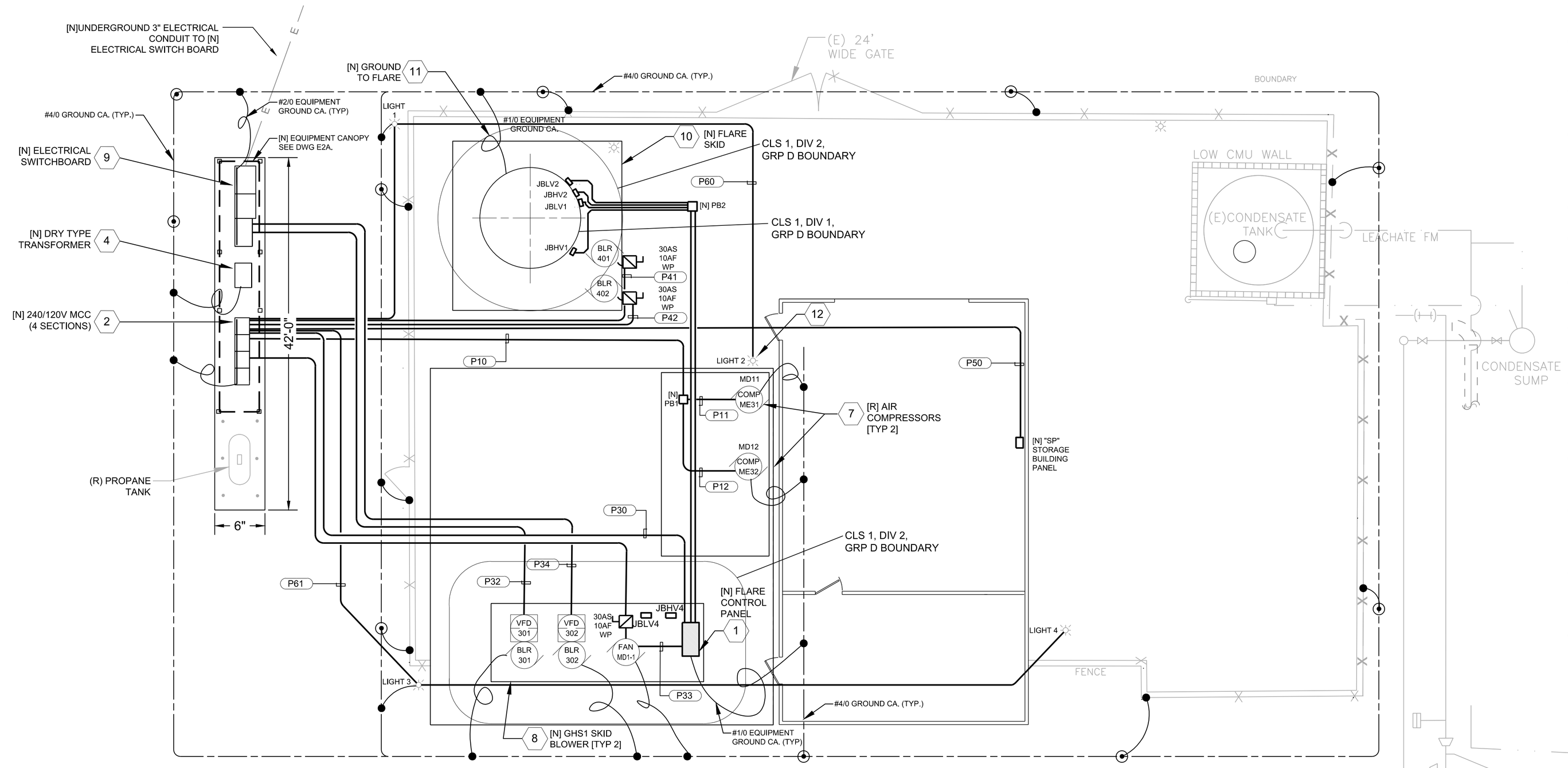

ELECTRICAL SITE PLAN

0' 10' 20'

SCALE: 1.5"=20'

NUMBERED ELECTRICAL NOTES

1. [N]FLARE CONTROL PANEL PROVIDED BY FLARE VENDOR. INSTALLED BY ELECTRICAL CONTRACTOR. VERIFY EXACT INSTALLATION REQUIREMENTS.
2. [N]MOTOR CONTROL CENTER 600A, 240/120V, 3PH, 4W SEE ELEVATION DETAIL SHEET E2A FOR NEW WORK.
3. DECOMMISSION [E] CONDENSATE CONTROL PANEL. DISCONNECT AND REMOVE [E]CIRCUITRY TO [E] FLARE CONTROL PANEL. PROVIDE AND INSTALL [N]CIRCUITRY AND EXTEND TO [N]FLARE CONTROL PANEL.
4. [N]150 KVA DRY TYPE TRANSFORMER SEE ELEVATION SHEET E2A FOR NEW WORK.
5. [E] AUBURN RTU PANEL: TRANSFER REMAINING ACTIVE SIGNALS FROM [E] RTU AND REWIRE TO NEW FLARE CONTROL PANEL INPUT MODULE FOR TRANSMISSION TO CENTRAL SCADA SERVER (COMMUNICATIONS PROTOCOL T.B.D.)
6. [N]PANEL "SP" INSTALLED IN NEW BUILDING, SEE DRAWING E-6 FOR DETAIL 120/240V,3PH,4W,40A MCB, TYPE 1 SURFACE CABINET.
7. [R]AIR COMPRESSORS. DISCONNECT AND REMOVE [E]CONDUIT AND CIRCUITRY FROM [E]COMPRESSORS. PROVIDE AND INSTALL [N]CONDUIT AND CIRCUITRY TO RELOCATED COMPRESSORS AND CONNECT.
8. [N]125HP BLOWER GAS HANDLING SKID [GHS-1]. PROVIDE AND INSTALL [N]CONDUIT AND CIRCUITRY AND CONNECT TO SKID MOUNTED FIELD WIRING TERMINAL BOXES. SKID MOUNTED PRE-WIRED BOXES BY OTHERS. VERIFY EXACT TERMINATION REQUIREMENTS WITH FLARE EQUIPMENT CONTRACTOR.
9. [N]SWITCHBOARD WITH METERING 600A, 480VAC, 3PHASE, 4 WIRE SEE ELEVATION DETAIL SHEET E2A FOR NEW WORK.
10. [N]GAS FLARE SKID [FLR] PROVIDE AND INSTALL [N]CONDUIT AND CIRCUITRY AND CONNECT TO SKID MOUNTED FIELD WIRING TERMINAL BOXES. SKID PRE-WIRED BY OTHERS. VERIFY EXACT TERMINATION REQUIREMENTS.
11. [N]GROUNDING. PROVIDE AND INSTALL ONE [N]#1/0 BARE COPPER GROUND CABLE AND CONNECT TO FLARE AND PIP SKID STEEL, BLOWER ENCLOSURES, [N]CONTROL PANEL AND [E]MCC GROUNDED BUS BAR.
12. [N] LIGHTING SHOWN PER PLACER COUNTY REGULATIONS.

THE PROJECT WAS ORIGINALLY DESIGNED AND BID AS A REPLACEMENT OF THE BLOWER/FLARE STATION THAT INCLUDED REUSING SEVERAL COMPONENTS OF THE EXISTING FACILITIES AND 240 VAC MAIN POWER SUPPLY. THE CURRENT PROJECT, BIDDING PROCESS AND BID FORM IS BASED ON UPGRADING THE FACILITY TO USE 480 VAC POWER, REUSING VERY FEW AND SELECTED FACILITIES, AND USING A REVISED LAYOUT SHOWN ON SHEET 7A. ANY REFERENCES TO NEW 240 VAC EQUIPMENT IN THE PLANS OR SPECIFICATIONS ARE INTENDED TO BE 480 VAC.

ELECTRICAL NOTES

1. ELECTRICAL MATERIALS INSTALLED IN HAZARDOUS LOCATIONS, AS DEFINED BY NFPA 70, SHALL HAVE UTILIZATION LISTING. APPLIES TO NEW CONSTRUCTION ONLY. BOUNDARIES AND : THE AREA RADIATING 3' FROM BURNER EXHAUST OPENING - CLASS 1, DIVISION 1, GROUP D, CLASSIFICATIONS THE AREA RADIATING 5' FROM BLOWERS, AND BLOWER DISCHARGE VALVES AND FLANGES - CLASS 1, DIVISION 2, GROUP D,
2. PROVIDE CONDUITS WITH UL886 SEALS AND APPROVED SEALING COMPOUND WHEN PENETRATING BOUNDARIES OR WHEN PIERCING GRADE. SEALS SHALL BE WITHIN 18" OF ENCLOSURES OR GRADE. SEALS SHALL BE PACKED AND POURED AFTER COMMISSIONING.
3. COMMON GROUNDING SYSTEM IS REQUIRED. UTILIZE [E]GROUND RODS, REPLACE ANY GROUND CABLE OR GROUND CONNECTORS THAT ARE LOOSE OR WORN, AS REQUIRED. TEST GROUND RESISTANCE. THE SYSTEM SHALL NOT EXCEED 25 OHMS. .
4. PROVIDE AND INSTALL CONDUIT AND WIRE FROM TRAY TO TERMINAL BOXES. CONTROL PANELS, MOTORS, AND INSTRUMENTATION. TERMINAL BOXES PROVIDED AND INSTALLED BY SKID MANUFACTURER. REFER TO VENDOR DRAWINGS FOR TERMINATION REQUIREMENTS..
5. MOTORS, INSTRUMENTS AND THE LIKE THAT ARE NOT PRE-CONNECTED TO A TERMINAL BOXES SHALL BE CONNECTED BY ELECTRICAL CONTRACTOR..COORDINATE WITH VENDOR FOR THE EXACT NUMBER OF DEVICES TO BE FIELD CONNECTED..

ELECTRICAL LEGEND

- 1 — NUMBERED NOTE
- C10 — CONDUIT TAG
- IY 300 — INSTRUMENT TAG
- NEW CONDUIT
- CONDUIT BY OTHERS (OR CONDUIT EXISTING)
- GROUND CABLE
- GROUND ELECTRODE
- CONNECTION
- CONDUIT SEAL
- BOX
- NEW PANEL

P - POWER
C - CONTROL
S - SIGNAL

- CIRCUIT BREAKER
- CONTACTOR
- OVERLOAD
- BLR 301 — MOTOR
- [N] NEW
- [E] EXISTING
- [R] REPLACE OR RELOCATE

- PRIMARY U/G GROUND CABLE, #4/0 STRANDED BARE COPPER
- BRANCH GROUND CABLE TAP, #2/0 STRANDED BARE COPPER
- GROUND CONNECTION OR BOND
- GROUND ROD

Rev.	YYYY-MM-DD	DESCRIPTION	PREPARED	DESIGN	REVIEW	APPROVED
A	2016-08-11	ISSUED FOR BID	SMA	JR	APW	JR

CLIENT
WESTERN PLACER WASTE MANAGEMENT AUTHORITY

CONSULTANT
Golder Associates

Golder Associates Inc.
425 Lakeside Drive
Sunnyvale, California 94085
USA
408-220-9223
www.golder.com

PROJECT
WESTERN REGIONAL SANITARY LANDFILL
2016 GCCS EXPANSION

TITLE
BLOWER FLARE MODIFICATIONS
ELECTRICAL SITE PLAN

PROJECT No. 1420152 | Rev. 1 | 29 of 58 | DRAWING E3A

IF THIS MEASUREMENT DOES NOT MATCH WHAT IS SHOWN, THE SHEET SIZE HAS BEEN MODIFIED FROM: ANSI D

Path: \\walnutcreek\acad\Sites\1422-0152 WPWMA\PRODUCTION\ELECTRICAL\ | File Name: WPWMA FLARE E3A.dwg

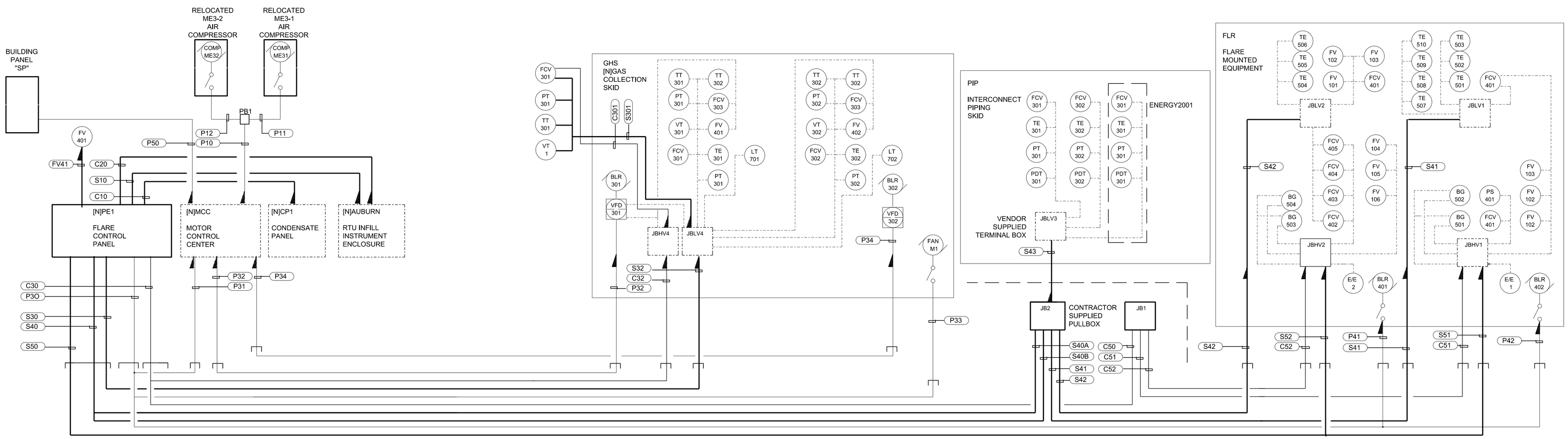

CONDUIT BLOCK DIAGRAM

LINE	TAG	SIZE	TYPE	GRND	FILL	MAT	INSUL	FROM	TO	
1	P10	1 1/4"	RMC	1#6g	6#3	CU	THWN	[N]MCC	Compressors JB	
2	P11	1'	RMC	1#6g	3#3	CU	THWN	Compressors JB	Compressor ME3-1	
3	P12	1'	RMC	1#6g	3#3	CU	THWN	Compressors JB	Compressor ME3-2	
4	P30	2"	RMC	2#12G,1#8G	2C#10,2C#12,3C#8	CU	THWN/TC	PE1 Flare Control	M1 Fan/MCC/BLR 401,2	
5	P31	1"	RMC	1#8g	3C#8	CU	THWN/TC	PE1 Flare Control	[N]MCC	
6	P32	2"	RMC	1#3G	3#4/0	CU	THWN	VFD-301	[N]MCC	
7	P33	3/4"	RMC	1#12g	2C#12	CU	THWN/TC	PE1 Flare Control	M1 Fan	
8	P40	1 1/2"	RMC	1#10g	2-2C#10	CU	THWN/TC	PE1 Flare Control	BLR 401/402	
9	P41	3/4"	RMC	1#10g	2C#10	CU	THWN/TC	PE1	BLR 401	
10	P42	3/4"	RMC	1#10g	2C#10	CU	THWN/TC	PE1	BLR 402	
11	P50	1"	RMC	1#8G	3#8	C U	THWN	[N]MCC	PANEL SP	
12	P32	2"	RMC	1#3G	3#4/0	CU	THWN	VFD-302	[N]MCC	
13	C10	1"	RMC	1#14g	8C#14	CU	THWN/TC	PE1 Flare Control	[E]Condensate Panel	
14	C20	1"	RMC	1 #14g	2-8C#14 (8rd,8wt)	CU	THWN/TC	PE1 Flare Control	[N]RTU	
15	P51	1"	RMC	1 #8g						
16	C30	2"	MC	1#14g	17-2C#14 (16rd,1bl,11wt)	CU	THWN/TC	PE1 Flare Control	[N]VFD-1/GHS1/PIP JB1	
17	C31	1 1/2"	RMC	1#14g	6-2C#14 (6rd,6wt)	CU	THWN/TC	PE1	[N]VFD-1	
18	C32	1 1/2"	RMC	1#14g	4-2C#14 (3rd,1bl,4wt)	CU	THWN/TC	RE1	HS1 JBHV4	
19	C301	1"	RMC	1#14g	2C#14 (1bl,1wt)	CU	THWN/TC	FCV-301	GHS1 JBHV4	
20	C50	2"	RMC	1#16g	7-2C#16 (11rd,2wt)	CU	THHN/TC	PE1 Flare Control	PIP JB1	
21	C51	1 1/2"	RMC	5#16g	4-2C#16 (6rd,2wt)	CU	THHN/TC	FLR JBHV1	PIP JB1	
22	C52	1 1/2"	RMC	5#16g	3-2C#16 (5rd,1wt)	CU	THHN/TC	FLR JBHV2	PIP JB1	
23	C60	1"	RMC	1#14g	8C#14	CU	THHN/TC	PE1	[N]FLARE CTRL	
24	S10	1"	RMC	_	Empty	_	_	PE1 Flare Control [N]BLDG		
25	S20	3/4"	RMC		1-CAT 5 Cable			PE1 Flare Control	[N]RTU	
26	S30	1 1/2"	RMC	1#16g	8-2c#16TSP	_	Belden 8760	PE1 Flare Control	[N]VFD-1/GHS1 JBLV4	
27	S31	3/4"	RMC	1#16g	2-2c#16TSP	_	Belden 8760	PE1	[N]VFD-1	
28	S32	2"	RMC	1#16g	17-2c#16TSP		Belden 8760	PE1	GHS1 JBLV4	
29	S301	1 1/4"	RMC	1#16g	4-2c#16TSP		Belden 8760	FCV-301	GHS1 JBLV4	
30	S40A	1 1/2"	RMC	1#16g	17-2c#16TSP	_	Belden 8760	PE1 Flare Control	PIP JB2	
31	S40B	1 1/2"	RMC	13#16g	10-2c#18(Type K),3-2c#18 (Type E)			PE1 Flare Control	PIP JB2	
32	S41	1 1/2"	RMC	7#16g	7-2c#18(Type K),4-2c#16TSP		Belden 8760	FLR JBLV1	PIP JB2	
33	S42	1 1/2"	RMC	3#16g	3-2c#18(Type K),4-2c#16TSP		Belden 8760	FLR JBLV2	PIP JB2	

No	TAG	SIZE	TYPE	GRND	FILL	MAT	INSUL	FROM	TO	
34	S43	2"	RMC	3#16g	3-2c#18(Type E), 9-2c#16TSP	_	Belden 8760	PIP JBLV3	PIP JB2	
35	S50	1 1/4"	RMC	1#16g	4-2c#16TSP	_	Belden 8760	PE1 Flare Control	FLR JBHV1,2	
36	S51	3/4"	RMC	1#16g	2-2c#16TSP	_	Belden 8760	PE1	FLR JBHV1	
37	S52	3/4"	RMC	1#16g	2-2c#16TSP	_	Belden 8760	PE1	FLR JBHV2	
38										
39	VT1	3/4"	RMC/LFMC	1#14g	1-2c#16TSP	CU	Belden 8760	S301	VT1	
40	TT301	3/4"	RMC/LFMC	1#16g	1-2c#18(Type E)	_	Omega	S301	TE1	
41	PT301	3/4"	RMC/LFMC	1#14g	1-2c#16TSP	CU	Belden 8760	S301 VT2		
42	P60	1"	RMC	1#10g	1-2C#10	CU	THWN/TC	"LP" LIGHTING PANEL	LGHT 1, 2	
43	P61	1"	RMC	1#10g	1-2C#10	CU	THWN/TC	"LP" LIGHTING PANEL	LGHT 2,3	
44	FCV301	3/4"	RMC/LFMC	1#16g	2C#14	_	THWN	C201	TE302	
45	FV41	3/4"	RMC/LFMC	1#14g	2-2c#16TSP	CU	Belden 8760	PE1 Flare Control	FCV303	
46	S40	2"	RMC	14#16g	17-2c#16TSP,3-2C#18(TYPE E) 10-2c#18(Type K)	_	Belden 8760	PE1 Flare Control	PIP JB2	

CONSTRUCTION NOTES

1 WHEN CABLE TRAY IS USED AS A SUBSTITUTE TO CONDUIT REPLACE SINGLE CONDUCTORS FOR MULTI CONDUCTOR CABLE USE UL LISTED TC CABLE. EXAMPLE: 14#14THWN SINGLE CONDUCTORS IS EQUAL TO 7-2C#14THHN TC CABLES.

2 CABLE TYPES AS FOLLOWS:

2C#14 TC	2-Wire THHN in PVC Tray Cable, Include B.C.GROUND
2c#16TSP	2 Insulated Twisted Shield Pair, Belden 8760
2c#18(type E)	E-Type Thermocouple Wire Omega
2c#18(type K)	K-Type Thermocouple Wire Omega XC-K-20

3 BUILDING LIGHTING AND RECEPTACLES NOT INCLUDED IN SCHEDULE. CONDUIT AND CIRCUITRY NOT SHOWN HERE SHALL BE SIZED USING 20160 NATIONAL ELECTRICAL CODE.

THE PROJECT WAS ORIGINALLY DESIGNED AND BID AS A REPLACEMENT OF THE BLOWER/FLARE STATION THAT INCLUDED REUSING SEVERAL COMPONENTS OF THE EXISTING FACILITIES AND 240 VAC MAIN POWER SUPPLY. THE CURRENT PROJECT, BIDDING PROCESS AND BID FORM IS BASED ON UPGRADING THE FACILITY TO USE 480 VAC POWER, REUSING VERY FEW AND SELECTED FACILITIES, AND USING A REVISED LAYOUT SHOWN ON SHEET 7A. ANY REFERENCES TO NEW 240 VAC EQUIPMENT IN THE PLANS OR SPECIFICATIONS ARE INTENDED TO BE 480 VAC.

Rev.	YYYY-MM-DD	DESCRIPTION	PREPARED	DESIGN	REVIEW	APPROVED
A	2016-08-25	ISSUED FOR BIDDING	SMA	JR	APW	JR

CLIENT
WESTERN PLACER WASTE MANAGEMENT AUTHORITY

PROJECT
WESTERN REGIONAL SANITARY LANDFILL
2016 GCCS EXPANSION

CONSULTANT
Golder Associates

Golder Associates Inc.
425 Lakeside Drive
Sunnyvale, California 94085
USA
408-220-9223
www.golder.com

TITLE
BLOWER FLARE MODIFICATIONS
ELECTRICAL CONDUIT BLOCK DIAGRAM

PROJECT No. 1420152
Rev. 1

DRAWING E4A

IF THIS MEASUREMENT DOES NOT MATCH WHAT IS SHOWN, THE SHEET SIZE HAS BEEN MODIFIED FROM: ANSI D
0 1 in

Path: \\walnutcreek\acad\Sites\142-0152 WPWMA\PRODUCTION\ELECTRICAL\ | File Name: WPWMA FLARE E4A.dwg

REMOTE TELEMETRY UNIT – I/O SCHEDULE

TAG NAME	TYPE	DESCRIPTION	CONNECTION	MISC.
EXISTING FLARE SIGNALS TO AUBURN PLC VIA HARD WIRE INPUTS				
LLF11	DA	PLC STATUS	RTU DI 3	[No Change]
LLF12	DA	FLARE FLAME OUT	RTU DI 4	NOTE 1
LLF13	DA	DEMISTER PUMP FAILURE	RTU DI 5	[No Change]
LLF14	DA	FAILURE TO RE-START	RTU DI 6	NOTE 1
LLF15	DA	PERIMETER BLOWER 1 FAILURE	RTU DI 7	NOTE 2
LLF21	DA	GENERAL FLAME FAILURE	RTU DI 8	NOTE 1
LLF22	DA	INFILL BLOWER 3 FAILURE	RTU DI 9	NOTE 3
LLF23	DA	PERIMETER BLOWER 2 FAILURE	RTU DI 10	NOTE 2
LLF24	DA	FLARE TEMPERATURE HIGH	RTU DI 11	NOTE 1
LLF25	DA	CONDENSATE TANK 66% FULL	RTU DI 12	[No Change]
LLF26	DA	FLARE TEMPERATURE LOW	RTU DI 13	NOTE 1
LLF27	DA	CONDENSATE TANK 100% FULL	RTU DI 14	[No Change]
LLF28	DA	INFILL DEMISTER TANK LEVEL	RTU DI 15	[No Change]
LLFANALF	DA	ANALYZER FAULT	RTU DI 2	[No Change]
LLFANALCLA	DA	ANALYZER CALIBRATING	RTU DI 1	[No Change]
LLFCH4	AI	GAS ANALYZER METHANE	RTU AI 1	[No Change]
LLF02	AI	GAS ANALYZER OXYGEN	RTU AI 2	[No Change]
LLFFLOW3	AI	GAS ANALYZER FLOW	RTU AI 3	[No Change]
LLFTVFD	AI	VFD SPEED	RTU AI 4	NOTE 3
LLF2001FLOW1	AI	ENERGY2001 FLOW	YOKOGAWA 1	[T.B.D.]
LLF2001TEMP	AI	ENERGY2001 TEMP	YOKOGAWA 2	[T.B.D.]
LLFWMFLOW 1	AI	WPSL INFILL FLOW	YOKOGAWA 3	[T.B.D.]
LLF2001FLOWTOTAL	AI	ENERGY2001 FLOW TOTAL	YOKOGAWA 5	[T.B.D.]
LLFWMTEMP	AI	WPWM FLARE TEMP	YOKOGAWA 6	NOTE 1

TAG NAME	TYPE	DESCRIPTION
NEW DUAL FLARE SIGNALS TO AUBURN PLC VIA LAN DATA LINK WITH [N]FLARE CONTROL PANEL.		
LLF--	DA	FAILURE TO RE-START
LLF--	DA	GENERAL FLAME FAILURE
LLF--	DA	ZONE A FLARE FLAME OUT
LLF--	DA	ZONE B FLARE FLAME OUT
LLF--	DA	ZONE A FLARE TEMPERATURE HIGH
LLF--	DA	ZONE B FLARE TEMPERATURE HIGH
LLF--	DA	ZONE A FLARE TEMPERATURE LOW
LLF--	DA	ZONE B FLARE TEMPERATURE LOW
LLF--	DA	BLOWER 1 FAILURE
LLF--	DA	BLOWER 2 FAILURE
LLF--	DA	COMPRESSOR STARTS 1 - 2
LLF--	AI	VFD 1 SPEED
LLF--	AI	VFD 2 SPEED
	AI	CONDENSATE/LEACHATE METER GPM
	AI	CONDENSATE/LEACHATE METER TOTAL GALLONS
	AI	ZONE A FLOW FPM
	AI	ZONE B FLOW FPM
	AI	ZONE A TEMPERATURE
	AI	ZONE B TEMPERATURE
	AI	PRIMARY BLOWER BEARING TEMPERATURE
	AI	LFG TEMPERATURE
	AI	COMPRESSOR AIR PRESSURE
	AI	REMOTE LEACHATE FLOW METER TOTALS

1. SIGNALS TO REMAIN AS LONG AS EXISTING FLARE CONTINUES TO REMAIN IN SERVICE.
2. BLOWER SHALL BE DECOMMISSIONED AND STATUS SIGNAL SHALL BE ABANDON.
3. BLOWER TO REMAIN IN SERVICE. STATUS SIGNAL TO BE TRANSFERRED OVER TO NEW FLARE CONTROL PANEL.
4. THIS SCHEDULE IS PRELIMINARY AND IS INTENDED TO BE USED AS A REFERENCE ONLY.

THE PROJECT WAS ORIGINALLY DESIGNED AND BID AS A REPLACEMENT OF THE BLOWER/FLARE STATION THAT INCLUDED REUSING SEVERAL COMPONENTS OF THE EXISTING FACILITIES AND 240 VAC MAIN POWER SUPPLY. THE CURRENT PROJECT, BIDDING PROCESS AND BID FORM IS BASED ON UPGRADING THE FACILITY TO USE 480 VAC POWER, REUSING VERY FEW AND SELECTED FACILITIES, AND USING A REVISED LAYOUT SHOWN ON SHEET 7A. ANY REFERENCES TO NEW 240 VAC EQUIPMENT IN THE PLANS OR SPECIFICATIONS ARE INTENDED TO BE 480 VAC.

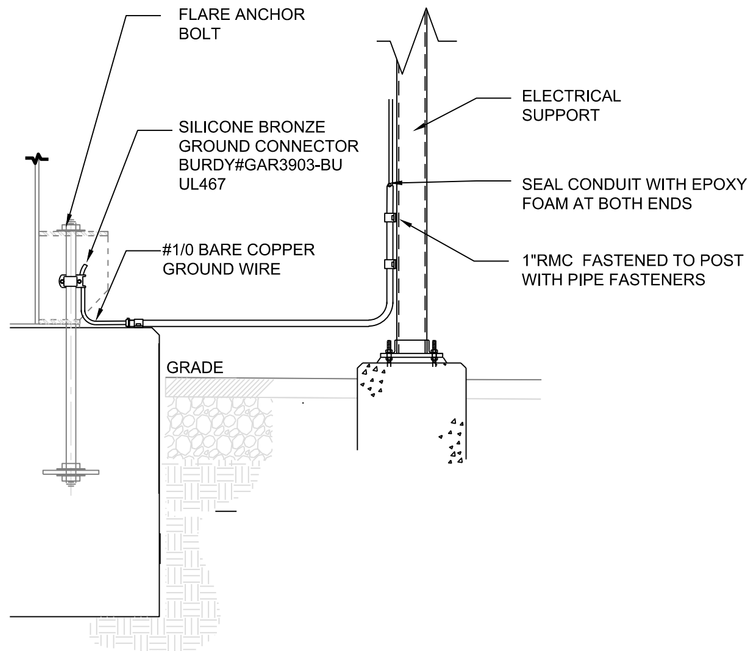

FLARE GROUNDING DETAIL
SCALE: NONE — E3A

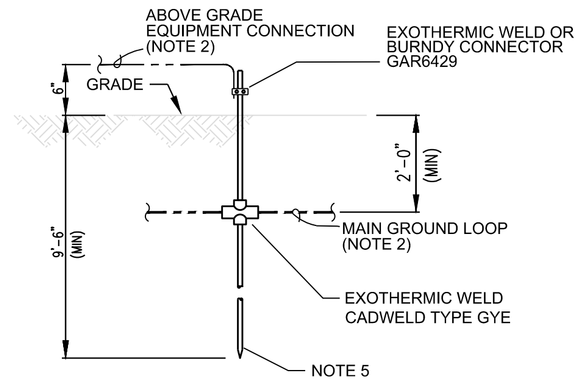

GROUND ROD
ABOVE GRADE CONNECTION WITH MAIN GROUND LOOP

DETAIL
SCALE: NONE — E3A

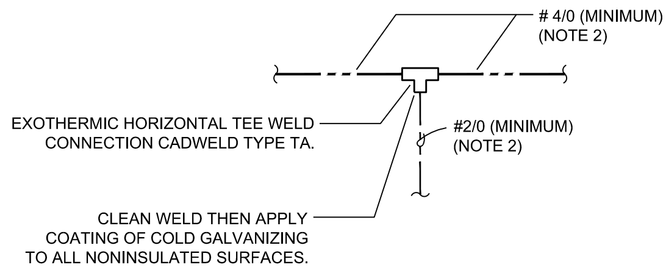

LEGEND SYMBOL: ●

UNDERGROUND TAP
#4/0 MAIN GROUND LOOP

DETAIL
SCALE: NONE — E3A

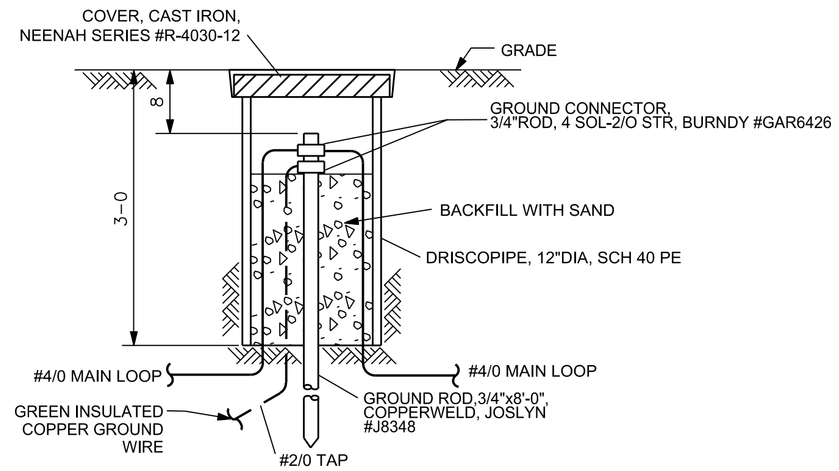

GROUND TEST WELL

DETAIL
SCALE: NONE — E3A

NOTES

1. CABLE TERMINALS TO BE EQUAL TO BURNDY "EA."
2. ALL GROUND WIRE TO BE STRANDED COPPER WITH GREEN 600V XHHW OR THW INSULATION.
3. MOTOR CONTROL CENTERS AND SWITCH GEAR SHALL HAVE A MINIMUM OF TWO "MAIN GROUND LOOP" SIZED GROUND CONNECTIONS FROM THE EQUIPMENT GROUND BUS DIRECTLY TO THE MAIN GROUND LOOP.
4. SERVIT POST SHALL BE EQUAL TO BURNDY "KC"
5. GROUND ROD TO BE 3/4" x 10' GALVANIZED STEEL. FOR EFFECTIVE USE OF GROUND ROD, RODS SHALL BE SPACED A MINIMUM OF 20' APART. REMOVE ROD GALVANIZING TO BARE STEEL BEFORE MAKING EXOTHERMIC (CADWELD) CONNECTION. THAN APPLY COATING OF COLD GALVANIZING TO ALL BARE METAL NON-GALVANIZED SURFACES.
6. SECURE PVC CONDUIT TO CONCRETE AT TWO LOCATIONS WITH CONDUIT CLAMPS.
7. MAIN GROUND LOOP TO BE DESIGNED ACCORDING TO FACILITY REQUIREMENTS BUT NOT SMALLER THAN #1/0.

Rev.	YYYY-MM-DD	DESCRIPTION	PREPARED	DESIGN	REVIEW	APPROVED
A	2016-12-18	ISSUED FOR BID	SMA	JR	APW	JR

CLIENT
WESTERN PLACER WASTE MANAGEMENT AUTHORITY

CONSULTANT
Golder Associates
Golder Associates Inc.
425 Lakeside Drive
Sunnyvale, California 94085
USA
408-220-9223
www.golder.com

PROJECT
WESTERN REGIONAL SANITARY LANDFILL
2016 GCCS EXPANSION

TITLE
BLOWER FLARE MODIFICATIONS
ELECTRICAL DETAILS

PROJECT No. 1420152 | Rev. 1 | | DRAWING E5A

Path: \\walnutcreek\acad\Sites\142-0152 WPWMA\PRODUCTION\ELECTRICAL\ | File Name: WPWMA FLARE E5A.dwg
0 1in IF THIS MEASUREMENT DOES NOT MATCH WHAT IS SHOWN, THE SHEET SIZE HAS BEEN MODIFIED FROM: ANSI D

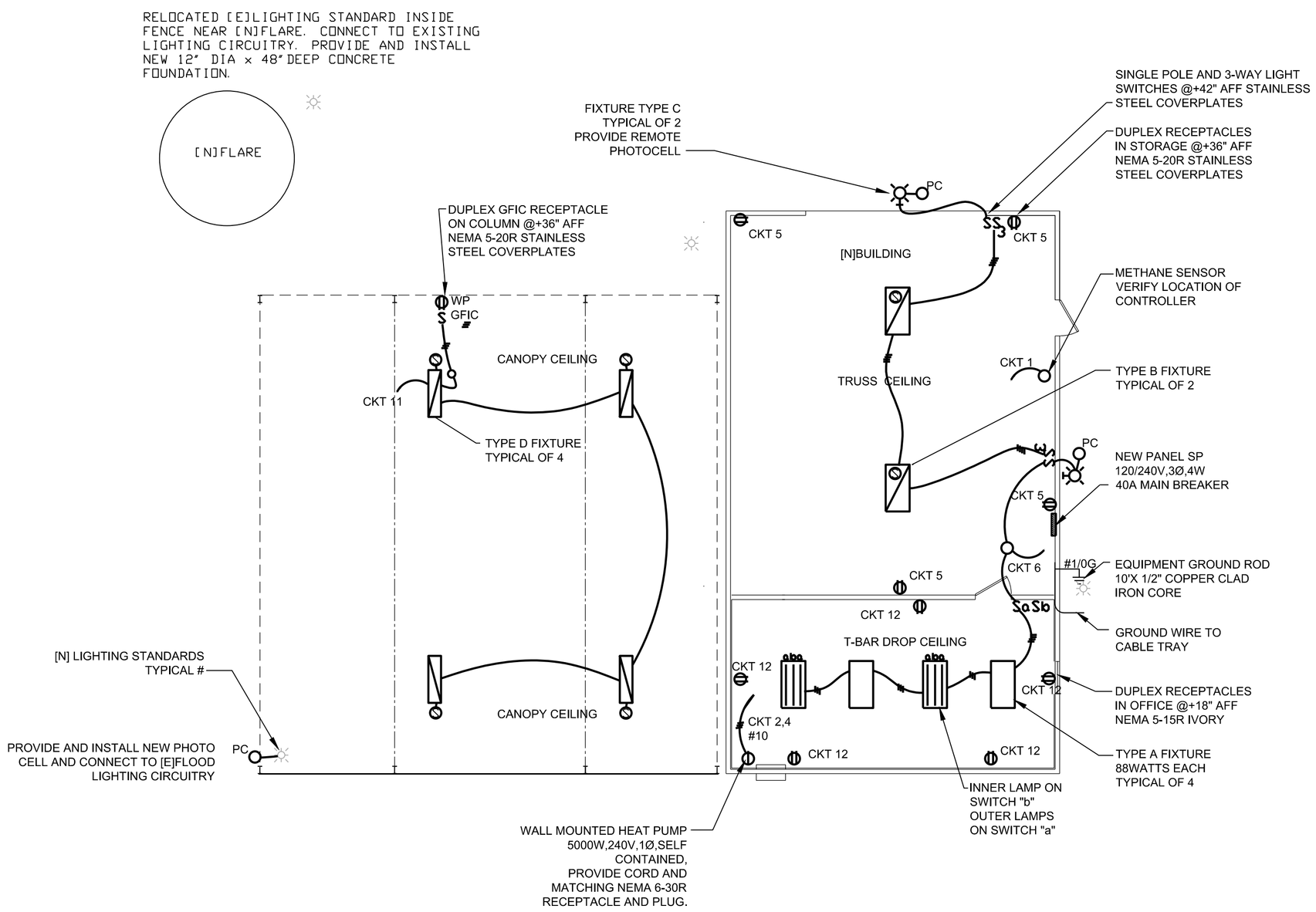

STORAGE BUILDING / CANOPY

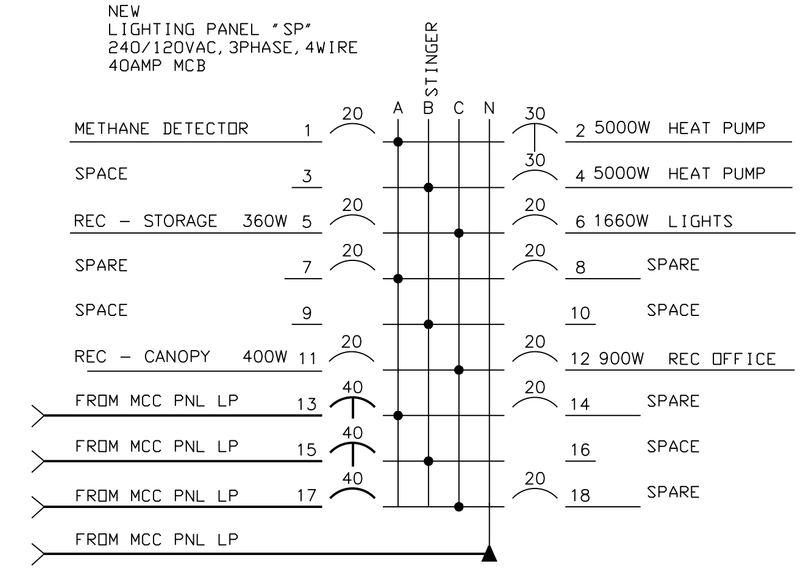

PANEL SCHEDULE

ELECTRICAL FLOOR PLAN

LIGHTING FIXTURE SCHEDULE

TYPE	WATTAGE	DESCRIPTION
FIXTURE TYPE A	3-32WT8 CW LAMPS	2X4 RECESSED T-BAR FIXTURE PRISMATIC LENS, 2-BALLAST
FIXTURE TYPE B	4-T5HO 57WATT LAMPS	2X4 LOWBAY FLUORESCENT PENDENT SECULAR REFLECTOR, MOTION SENSOR
FIXTURE TYPE C	1-ARRAY 60WATT LED 5000K	LED FLOOD IN WALL PACK @+12'-0" 13"Wx9"H IP65 W/REMOTE PHOTOCELL
FIXTURE TYPE D	2-T5HO 57WATT LAMPS	2X4 ENCLOSED FLUORESCENT PENDENT UL WET LOCATIONS, REMOTE MOTION SENSOR

CONSTRUCTION NOTE

1. CIRCUITRY SHALL BE IN CONDUIT AT ALL TIMES. CONDUIT CONCEALED IN WALLS OR CEILINGS SHALL BE EMT, RMC, OR IMC. CONDUIT IN EXPOSED AREAS IN STORAGE OR UNDER CANOPY SHALL BE GALVINIZED RIGID METAL CONDUIT "RMC".
2. PROVIDE AND INSTALL APPROVED AUTOMATIC FIRE ALARM SYSTEM. IF REQUIRED BY CODE.
3. LIGHTING FIXURE INSTALLATION SHALL MEET REQUIREMENTS IN CALIFORNIA TITLE 24 ENERGY COMPLIANCE REGULATIONS.

THE PROJECT WAS ORIGINALLY DESIGNED AND BID AS A REPLACEMENT OF THE BLOWER/FLARE STATION THAT INCLUDED REUSING SEVERAL COMPONENTS OF THE EXISTING FACILITIES AND 240 VAC MAIN POWER SUPPLY. THE CURRENT PROJECT, BIDDING PROCESS AND BID FORM IS BASED ON UPGRADING THE FACILITY TO USE 480 VAC POWER. REUSING VERY FEW AND SELECTED FACILITIES. AND USING A REVISED LAYOUT SHOWN ON SHEET 7A. ANY REFERENCES TO NEW 240 VAC EQUIPMENT IN THE PLANS OR SPECIFICATIONS ARE INTENDED TO BE 480 VAC.

0' 10' 20'
SCALE: 1.5" =20'

Rev.	YYYY-MM-DD	DESCRIPTION	PREPARED	DESIGN	REVIEW	APPROVED
A	2016-08-11	ISSUED FOR BID	SMA	JR	APW	JR

CLIENT
WESTERN PLACER WASTE MANAGEMENT AUTHORITY

PROJECT
WESTERN REGIONAL SANITARY LANDFILL
2016 GCCS EXPANSION

CONSULTANT
Golder Associates
Golder Associates Inc.
425 Lakeside Drive
Sunnyvale, California 94085
USA
408-220-9223
www.golder.com

TITLE
BLOWER FLARE MODIFICATIONS
ELECTRICAL FLOOR PLAN - STORAGE BUILDING

PROJECT No. 1420152
Rev. 1

DRAWING E6A

IF THIS MEASUREMENT DOES NOT MATCH WHAT IS SHOWN, THE SHEET SIZE HAS BEEN MODIFIED FROM: ANSI D

Path: \\walnutcreek\acad\Sites\142-0152 WPWMA\PRODUCTION\ELECTRICAL\ | File Name: WPWMA FLARE E6A.dwg

APPENDIX B
ALTERNATIVES TO LANDFILL NEW SOURCE PERFORMANCE STANDARDS (NSPS) REQUIREMENTS

1 ALTERNATIVE TO LANDFILL NSPS REQUIREMENTS

> **§60.752(b)(2)(i)(B)** The collection and control system design plan shall include any alternatives to the operational standards, test methods, procedures, compliance measures, monitoring, record keeping or reporting provisions of §60.753 through §60.758 proposed by the owner or operator.

Pursuant to Code of Federal Regulations (CFR) Title 40 Part 60 (known as New Source Performance Standards [NSPS]) Section (§)60.752(b)(2)(i)(B), a landfill gas collection and control system (GCCS) design plan may include proposed alternative procedures to the operational standards, test methods, procedures, compliance measures, monitoring, record keeping and reporting provisions of §60.753 through §60.758 in the NSPS. This section of the landfill GCCS design plan report identifies proposed exemptions/alternatives to the NSPS.

1.1 Temporary Partial GCCS Shutdowns

From time to time during normal operation and maintenance of the GCCS, control valves in the collection system must be closed in order to isolate a portion of the system for troubleshooting, maintenance, or addition of new wells. During such periods, wells in the temporary closure area may exhibit positive pressure for the static reading on the wellhead and gas collection header. The WPWMA requests this flexibility and notes that these temporary events will be documented as Startup, Shutdown and Malfunction (SSM) events as defined in the site's SSM Plan with proper documentation.

Exclusion of Leachate System from Operating Parameters

> **§60.753(c)** Operational Standards: "Operate each interior wellhead in the collection system with a LFG temperature less than 55 degrees Celsius and with either a nitrogen level less than 20 percent or an oxygen level less than 5 percent. The owner or operator may establish a higher operating temperature, nitrogen, or oxygen value at a particular well. A higher operating value demonstration shall show supporting data that the elevated parameter does not cause fires or significantly inhibit anaerobic decomposition by killing methanogens."

The GCCS may include future connections to leachate manholes and cleanout risers to extract LFG from the leachate collection system for interim odor and surface emissions control. Industry experience at other NSPS sites shows that leachate collection manholes and cleanout risers sometimes contain concentrations of nitrogen and oxygen similar to that of ambient air, above the NSPS thresholds. This is due to the fact that the leachate collection system is not an air-tight vacuum system, and was not designed as such. However, it does

provide a valuable collection point for LFG, since LFG production tends to be heaviest in areas of moist refuse (such as that found directly above the leachate drainage layer).

Unlike the vertical gas extraction wells, the leachate manhole draws from the leachate collection system beneath the refuse. Therefore, concentrations of air within these extraction points will not cause subsurface oxidation within the refuse, as could potentially happen in a classic vertical extraction well within refuse. Therefore, WPWMA requests that the pressure and nitrogen/oxygen exceedance limits not apply to leachate cleanout risers and leachate manhole extraction points.

Determination of Oxygen Levels at Monitoring Points

> **§60.753(c)(2)** Operational Standards: "Unless an alternative test method is established as allowed by § 60.752(b)(2)(i) of this subpart, the oxygen shall be determined by an oxygen meter using Method 3A or 3C ... "

When applicable, WPWMA proposes to use a portable on-site multi-gas analyzer, in lieu of a laboratory method, for determining the oxygen content of the LFG at each vertical extraction well and monitoring point. The site will be using a portable meter, such as a Landtec GEM-2000 or equivalent, calibrated to the manufacturer's specifications, to determine the oxygen content of the LFG. This is acceptable to and has previously been approved by the USEPA.

Monitoring of Extraction Wells in Active Fill Areas

> **§60.755(a)(3)** Compliance Provisions: "For the purpose of demonstrating whether the gas collection system flow rate is sufficient to determine compliance with §60.752(b)(2)(ii)(A)(3), the owner or operator shall measure gauge pressure in the gas collection header at each individual well, monthly."
>
> **§60.755(a)(5)** Compliance Provisions: "For the purpose of identifying whether excess air infiltration into the landfill is occurring, the owner or operator shall monitor each well monthly for temperature and nitrogen or oxygen as provided in § 60.753(c)."
>
> **§60.756(a)** Monitoring of Operations: "Except as provided in §60.752(b)(2)(i)(B), Each owner or operator seeking to comply with §60.752(b)(2)(ii)(A) for an active gas collection system shall install a sampling port and a thermometer, other temperature measuring device, or an access port for temperature measurements at each wellhead and:
>
> (l) Measure the gauge pressure in the gas collection header on a monthly basis as provided in §60.755(a)(3); and
>
> (2) Monitor nitrogen or oxygen concentration in the LFG on a monthly basis as provided in §60.755(a)(5); and

> (3) Monitor temperature of the LFG on a monthly basis as provided in §60.755(a)(5)."

Future vertical extraction wells may be placed in the active areas several years before the waste has reached final elevation grades. This is in compliance with the NSPS. However, since the vertical extraction wells are placed in active areas, they periodically need to be "raised" (i.e., the well casing extended 15 feet to 25 feet vertically) in order to not be buried under lifts of waste. In such cases, the well is temporarily disconnected until the surrounding lift of waste is brought high enough to reconnect the well to the collection system. The time period between when a vertical extraction well is disconnected and raised, and when the waste height is high enough to reconnect the lateral pipeline riser, may range from a few weeks to a few months. This can result in missed monthly readings at the vertical extraction well, since the well casing is too high for the technician to safely reach.

Since the NSPS allows for exclusion of surface monitoring in "dangerous areas" of the site, WPWMA believes it is reasonable to request exclusion to monitoring the vertical extraction wells raised in active areas. WPWMA proposes that readings will be missed at a particular vertical extraction well, for up to two (2) months, as long as the vertical extraction well cannot be safely accessed. If WPWMA cannot bring the waste height up to the new grade and re-attach the vertical extraction well within a two (2) month period, then modifications to the lateral pipeline riser and wellhead assembly (such as the vertical extraction well being cut back down and re-attached) will be made for monitoring. This request is in accordance with §60.752(b)(2)(i)(B), which allows the operator to propose alternatives to the monitoring procedures in the NSPS.

Start-Up of New or Replacement Wells

> **§60.755(a)(4)** Compliance Provisions: "Owners or operators are not required to expand the system as required in paragraph (a)(3) of this section during the first 180 days after gas collection system startup."

Landfill GCCS are typically built in phases to accommodate for additional waste placement and occasionally require the installation of new or replacement vertical extraction wells due to settlement, damage, etc. Installation of one or a few new or replacement vertical extraction wells can cause challenges with balancing the entire system and therefore may require additional time to not only achieve negative pressure in all vertical extraction wells but to also maintain the operating standard for oxygen, nitrogen, and/or temperature.

Per 40 CFR §60.755(a)(4), the Landfill is not required to expand the system during the first 180 days after GCCS start-up where pressure exceedances were recorded at one or more vertical extraction wells. Given the wellfield balancing challenges, WPWMA proposes that the exemption from system expansion applies to any individual vertical extraction well or

series of vertical extraction wells associated with the new or replacement vertical extraction wells upon start-up.

2 ALTERNATIVE COMPLIANCE OPTIONS TO CALIFORNIA CODE OF REGULATIONS - PREVIOUSLY APPROVED

WPWMA previously submitted a proposal for alternative compliance options to CCR Title 17, Division 3, Chapter 1, Subchapter 10, Article 4, Subarticle 6 (Title 17) to the PCAPCD. PCAPCD responded and approved various alternatives in an August 7, 2012 letter. The approved alternatives are presented below.

Methane Destruction Compliance Parameter - Flares

> **CCR §95464(b)(2)(A)(4)** requires that an enclosed flare operated as a control device be operated within the parameter ranges established during the initial or most recent source test.

Approved alternative: PCAPCD believes that it is reasonable that there be a tolerance on the flare operating temperature. If the last source test were used as the minimum operating temperature, then the allowable flare temperature would continually ratchet up with subsequent flare tests. PCAPCD accepts the requested 50 degree Fahrenheit below source test request. However, flare temperature is not the only compliance parameter. The methane destruction efficiency of at least 99 percent by weight of 95464(B)(2)(A)(1) must be demonstrated by annual or triennial source test. PCAPCD plans to amend the flare permits to include the annual methane destruction test.

Source Test Methods

> **CCR §95464(b)(4)** requires annual compliance testing of the control devices specifies the use of the test methods identified in CCR 95471(f), as follows: USEPA Methods 18, 25, 25A, or 25C.

Approved alternative: PCAPCD intends to add to the flare permits the 99 percent methane destruction requirement and use the test methods required in the permits. So the SEM should state that the test methods are called out in the permits. The Landfill Regulation requires flare testing annually until the destruction limit is achieved three (3) years consecutively, and then the testing frequency can be extended to three (3) years. The testing frequency in PCAPCD permits is biennially. Once the three (3) consecutive years of meeting the methane destruction requirement is achieved, PCAPCD intends to require the methane testing biennially with the other flare testing.

Wellhead Pressure Requirements

> **CCR §95469(c)** requires corrective action if monthly wellhead pressure monitoring results in a positive pressure reading except as exempted in CCR 95464(d) (well raising) and CCR 95464(e) (temporary shutdown in order to repair the components, due to catastrophic events such as earthquakes, to connect new LFG collection system components to the existing system, to extinguish landfill fires, or to perform construction activities.)

Approved alternative: PCAPCD approved the WPWMA request to allow temporary exemption from well head pressure requirements due to potential subsurface oxidation, well damage, poor LFG quality, or other reasons as documented by the WPWMA not listed in §95469. The event is to be described to the PCAPCD in writing and PCAPCD must concur.

Wellhead Pressure Exceedance Corrective Action

> **CCR §95469(c)(2)** requires further corrective actions be initiated, including, but not limited to, any necessary expansion of the GCCS, to correct any positive pressure readings if positive pressure readings cannot be corrected within 15 days after the initial positive pressure reading. CCR 95469(c)(3) requires corrective action, including any necessary expansion of the GCCS, to correct any positive pressure readings within 120 days of the initial positive pressure reading.

Approved alternative: PCAPCD will consider requests for alternative engineering solutions to be evaluated and allow an alternative timeline to consider and implement alternative solutions. This will require concurrence by PCAPCD for the engineering study and implementation.

Wellhead Negative Pressure Requirements

> **CCR §95464(c)** requires that wellheads be operated under negative pressure except as noted in CCR 95464(c)(d) or (e).

Approved alternative: PCAPCD concurred with WPWMA's interpretation is that this applies to wells within the limit of the waste and not to perimeter wells or soil vapor extraction wells which are not in refuse and are not extracting LFG, consistent with the NSPS.

Continuous Routing of LFG/Operations of GCCS

> **CCR §95464(b)(1)(A)** requires that the owner or operator of a GCCCS "Route the collected gas to a gas control device or devices, and operate the gas collection and control system continuously except as provided in CCR 95464(d) and (e)".

Approved alternative: PCAPCD will accept WPWMA's interpretation, consistent with the NSPS, that GCCS downtime of less than five (5) days and/or control device downtime of less than one (1) hour not be considered reportable deviations, and therefore only subject to the SSM reporting requirements.

Surface Emissions Monitoring Requirements

The sections below present the alternatives approved by PCPAPCD in their August 7, 2012 letter for surface emissions monitoring requirements.

Areas Excluded from Collection and SEM

> **CCR §95464(a)(1)(F)(1)** allows any areas of the landfill that contain only asbestos-containing waste, inert waste, or non-decomposable solid waste may be excluded from collection.

Approved alternative: Any areas of the landfill that contain only asbestos-containing waste, inert waste or non-decomposable solid waste may be excluded from collection and SEM.

Areas Excluded from SEM Where Safety Issues Exist

> **CCR §95471(c)(1)** requires that **t**he entire landfill surface must be divided into individually identified 50,000 square foot grids. The grids must be used for both instantaneous and integrated SEM.

Approved alternative: PCAPCD accepts and allows the exclusion of areas of greater than 25 percent slope.

Re-monitoring After Instantaneous and Integrated Exceedances

> **CCR §95469(a)(1)(B) and (a)(2)(B)** require correct action be taken by the owner or operator require corrective action be taken by the owner or operator such as, but not limited to, cover maintenance or repair, or well vacuum adjustments and location re-monitored within ten calendar days of a measured exceedance of the instantaneous and/or integrated surface emission standards.

Approved alternative: PCAPCD will allow additional time for re-monitoring in cases where the area is dangerous or cannot be safely reached.

SEM Remediation after Third Instantaneous and/or Third Integrated SEM Exceedance

> **CCR §95469(a)(1)(B)(2) and (a)(2)(B)(2)** require the installation of a new or replacement well within 120 calendar days of detecting a third exceedance of the Instantaneous SEM limit of CCR 95465(a)(l) and/or the Integrated SEM limit of CCR 95465(a)(2).

Approved alternative: PCAPCD will allow other modifications than just additional wells, as appropriate, to correct exceedances. A corresponding alternative compliance timeline beyond 120 days will be allowed, as appropriate.

SEM Monitoring Height

> **CCR §95471(c)(1)(A)** requires that SEM be conducted by holding the probe within three (3) inches of the landfill surface while traversing the grid.

Approved alternative: If an area clear of surface vegetation cannot be found in the walking path, PCAPCD will allow the top of the vegetation to be considered the landfill surface and the probe be held within three inches vertical of the vegetation surface.

Wind Speed

> **CCR §95471(c)(1)(C)** requires that SEM must be terminated when the average wind speed exceeds file miles per hour or the instantaneous wind speed exceeds 10 miles per hour.

Approved alternative: PCAPCD will accept the alternative wind speeds of 10 miles per hour for average wind and 20 miles per hour for instantaneous wind speed.

Measurable Precipitation

> **CCR §95471(c)(1)(D)** requires that SEM must be conducted only when there has been no measurable precipitation in the preceding 72 hours.

Approved alternative: PCAPCD will allow SEM to be conducted only when there has been no measurable precipitation in the preceding 24 hours. WPWMA shall minimize the times when SEM is conducted with precipitation in the preceding 24 to 72 hours.

Grid Areas – Near Landfill Waste Boundaries

> **CCR §95471(c)(1)** requires that **t**he entire landfill surface must be divided into individually identified 50,000 square foot grids. The grids must be used for both instantaneous and integrated SEM.

Approved alternative: Since landfills are not sized in 50,000 square foot increments, PCAPCD will allow along waste area boundaries and around areas that cannot be subjected to SEM due to safety reasons, grid segments that are slightly larger or smaller than 50,000 square feet.

Closed Areas – Reduction to Annual SEM

> **CCR §95469(a)(3)** allows an owner or operator of a closed or inactive MSWQ landfill, or any closed or inactive areas on an active MSW landfill that can demonstrate that in the three years before the effective date of this subarticle that there were no measured exceedances of the limits specified in 95469 by annual or quarterly monitoring may monitor annually.

Approved alternative: PCAPCD will allow closed areas designated as Modules 1, 2, 10 and 11 to be tested annually. If an exceedance of the limits is measured, the testing of the affected area hall return to quarterly testing.

APPENDIX C

LANDGEM LANDFILL GAS EMISSIONS MODELING

Summary Report

Landfill Name or Identifier: Western Regional Sanitary Landfill

Date: Friday, October 28, 2016

Description/Comments:
LandGEM analysis for low food waste diversion case (34.5% food waste average after 2021)

About LandGEM:

First-Order Decomposition Rate Equation:

$$Q_{CH_4} = \sum_{i=1}^{n} \sum_{j=0.1}^{1} kL_o \left(\frac{M_i}{10} \right) e^{-kt_{ij}}$$

Where,

Q_{CH4} = annual methane generation in the year of the calculation ($m^3/year$)
i = 1-year time increment
n = (year of the calculation) - (initial year of waste acceptance)
j = 0.1-year time increment
k = methane generation rate ($year^{-1}$)
L_o = potential methane generation capacity (m^3/Mg)
M_i = mass of waste accepted in the ith year (Mg)
t_{ij} = age of the jth section of waste mass M_i accepted in the ith year (*decimal years*, e.g., 3.2 years)

LandGEM is based on a first-order decomposition rate equation for quantifying emissions from the decomposition of landfilled waste in municipal solid waste (MSW) landfills. The software provides a relatively simple approach to estimating landfill gas emissions. Model defaults are based on empirical data from U.S. landfills. Field test data can also be used in place of model defaults when available. Further guidance on EPA test methods, Clean Air Act (CAA) regulations, and other guidance regarding landfill gas emissions and control technology requirements can be found at http://www.epa.gov/ttnatw01/landfill/landflpg.html.

LandGEM is considered a screening tool — the better the input data, the better the estimates. Often, there are limitations with the available data regarding waste quantity and composition, variation in design and operating practices over time, and changes occurring over time that impact the emissions potential. Changes to landfill operation, such as operating under wet conditions through leachate recirculation or other liquid additions, will result in generating more gas at a faster rate. Defaults for estimating emissions for this type of operation are being developed to include in LandGEM along with defaults for convential landfills (no leachate or liquid additions) for developing emission inventories and determining CAA applicability. Refer to the Web site identified above for future updates.

Input Review

LANDFILL CHARACTERISTICS

Landfill Open Year	**1979**	
Landfill Closure Year (with 80-year limit)	**2056**	
Actual Closure Year (without limit)	***2056***	
Have Model Calculate Closure Year?	**No**	
Waste Design Capacity		*short tons*

MODEL PARAMETERS

Methane Generation Rate, k	**0.036**	$year^{-1}$
Potential Methane Generation Capacity, L_o	**116**	m^3/Mg
NMOC Concentration	**595**	*ppmv as hexane*
Methane Content	**50**	*% by volume*

GASES / POLLUTANTS SELECTED

Gas / Pollutant #1:	**Total landfill gas**
Gas / Pollutant #2:	**Methane**
Gas / Pollutant #3:	**Carbon dioxide**
Gas / Pollutant #4:	**NMOC**

WASTE ACCEPTANCE RATES

Year	Waste Accepted		Waste-In-Place	
	(Mg/year)	*(short tons/year)*	*(Mg)*	*(short tons)*
1979	1,610	1,771	0	0
1980	36,205	39,826	1,610	1,771
1981	37,272	40,999	37,815	41,597
1982	39,026	42,929	75,087	82,596
1983	66,034	72,637	114,114	125,525
1984	99,795	109,775	180,147	198,162
1985	116,264	127,890	279,943	307,937
1986	132,545	145,799	396,206	435,827
1987	140,678	154,746	528,751	581,626
1988	186,641	205,305	669,429	736,372
1989	170,483	187,531	856,070	941,677
1990	170,042	187,046	1,026,553	1,129,208
1991	166,837	183,521	1,196,595	1,316,254
1992	168,149	184,964	1,363,432	1,499,775
1993	171,245	188,370	1,531,581	1,684,739
1994	158,437	174,281	1,702,826	1,873,109
1995	165,445	181,989	1,861,264	2,047,390
1996	165,146	181,661	2,026,708	2,229,379
1997	160,968	177,065	2,191,855	2,411,040
1998	181,424	199,566	2,352,823	2,588,105
1999	202,045	222,250	2,534,246	2,787,671
2000	235,023	258,525	2,736,292	3,009,921
2001	249,346	274,281	2,971,315	3,268,446
2002	266,225	292,847	3,220,661	3,542,727
2003	227,683	250,451	3,486,885	3,835,574
2004	233,951	257,346	3,714,568	4,086,025
2005	244,051	268,456	3,948,519	4,343,371
2006	256,545	282,199	4,192,570	4,611,827
2007	242,057	266,263	4,449,115	4,894,027
2008	217,299	239,029	4,691,172	5,160,290
2009	200,534	220,587	4,908,472	5,399,319
2010	187,152	205,867	5,109,005	5,619,906
2011	189,136	208,050	5,296,157	5,825,773
2012	181,798	199,978	5,485,293	6,033,822
2013	194,106	213,516	5,667,091	6,233,800
2014	198,375	218,213	5,861,197	6,447,317
2015	212,976	234,274	6,059,572	6,665,530
2016	202,644	222,908	6,272,549	6,899,804
2017	201,331	221,464	6,475,192	7,122,712
2018	193,676	213,044	6,676,523	7,344,175

WASTE ACCEPTANCE RATES (Continued)

Year	Waste Accepted		Waste-In-Place	
	(Mg/year)	*(short tons/year)*	*(Mg)*	*(short tons)*
2019	196,484	216,133	6,870,199	7,557,219
2020	199,405	219,345	7,066,683	7,773,352
2021	203,097	223,406	7,266,088	7,992,697
2022	206,986	227,685	7,469,185	8,216,103
2023	210,951	232,046	7,676,171	8,443,788
2024	214,992	236,491	7,887,122	8,675,834
2025	219,112	241,023	8,102,114	8,912,325
2026	223,311	245,642	8,321,226	9,153,348
2027	227,592	250,351	8,544,537	9,398,991
2028	231,955	255,150	8,772,129	9,649,341
2029	236,403	260,043	9,004,084	9,904,492
2030	240,937	265,030	9,240,486	10,164,535
2031	245,558	270,114	9,481,423	10,429,565
2032	250,269	275,296	9,726,981	10,699,679
2033	255,072	280,579	9,977,250	10,974,976
2034	259,967	285,964	10,232,322	11,255,554
2035	264,957	291,453	10,492,289	11,541,518
2036	270,044	297,048	10,757,246	11,832,971
2037	275,229	302,752	11,027,290	12,130,019
2038	280,515	308,567	11,302,519	12,432,771
2039	285,903	314,494	11,583,034	12,741,338
2040	291,396	320,536	11,868,938	13,055,832
2041	296,995	326,695	12,160,334	13,376,367
2042	302,703	332,973	12,457,329	13,703,062
2043	308,521	339,373	12,760,032	14,036,035
2044	314,453	345,898	13,068,553	14,375,409
2045	320,499	352,549	13,383,006	14,721,306
2046	326,662	359,329	13,703,505	15,073,855
2047	332,945	366,240	14,030,167	15,433,184
2048	339,351	373,286	14,363,112	15,799,424
2049	345,880	380,468	14,702,463	16,172,709
2050	352,536	387,789	15,048,343	16,553,177
2051	359,321	395,253	15,400,879	16,940,967
2052	366,238	402,862	15,760,200	17,336,220
2053	373,289	410,618	16,126,438	17,739,082
2054	373,289	410,618	16,499,727	18,149,700
2055	373,289	410,618	16,873,017	18,560,318
2056	0	0	17,246,306	18,970,937
2057	0	0	17,246,306	18,970,937
2058	0	0	17,246,306	18,970,937

Pollutant Parameters

		Gas / Pollutant Default Parameters:		*User-specified Pollutant Parameters:*	
	Compound	Concentration (*ppmv*)	Molecular Weight	Concentration (*ppmv*)	Molecular Weight
Gases	Total landfill gas		0.00		
	Methane		16.04		
	Carbon dioxide		44.01		
	NMOC	4,000	86.18		
Pollutants	1,1,1-Trichloroethane (methyl chloroform) - HAP	0.48	133.41		
	1,1,2,2-Tetrachloroethane - HAP/VOC	1.1	167.85		
	1,1-Dichloroethane (ethylidene dichloride) - HAP/VOC	2.4	98.97		
	1,1-Dichloroethene (vinylidene chloride) - HAP/VOC	0.20	96.94		
	1,2-Dichloroethane (ethylene dichloride) - HAP/VOC	0.41	98.96		
	1,2-Dichloropropane (propylene dichloride) - HAP/VOC	0.18	112.99		
	2-Propanol (isopropyl alcohol) - VOC	50	60.11		
	Acetone	7.0	58.08		
	Acrylonitrile - HAP/VOC	6.3	53.06		
	Benzene - No or Unknown Co-disposal - HAP/VOC	1.9	78.11		
	Benzene - Co-disposal - HAP/VOC	11	78.11		
	Bromodichloromethane - VOC	3.1	163.83		
	Butane - VOC	5.0	58.12		
	Carbon disulfide - HAP/VOC	0.58	76.13		
	Carbon monoxide	140	28.01		
	Carbon tetrachloride - HAP/VOC	4.0E-03	153.84		
	Carbonyl sulfide - HAP/VOC	0.49	60.07		
	Chlorobenzene - HAP/VOC	0.25	112.56		
	Chlorodifluoromethane	1.3	86.47		
	Chloroethane (ethyl chloride) - HAP/VOC	1.3	64.52		
	Chloroform - HAP/VOC	0.03	119.39		
	Chloromethane - VOC	1.2	50.49		
	Dichlorobenzene - (HAP for para isomer/VOC)	0.21	147		
	Dichlorodifluoromethane	16	120.91		
	Dichlorofluoromethane - VOC	2.6	102.92		
	Dichloromethane (methylene chloride) - HAP	14	84.94		
	Dimethyl sulfide (methyl sulfide) - VOC	7.8	62.13		
	Ethane	890	30.07		
	Ethanol - VOC	27	46.08		

Pollutant Parameters (Continued)

		Gas / Pollutant Default Parameters:		*User-specified Pollutant Parameters:*	
	Compound	Concentration (*ppmv*)	Molecular Weight	Concentration (*ppmv*)	Molecular Weight
Pollutants	Ethyl mercaptan (ethanethiol) - VOC	2.3	62.13		
	Ethylbenzene - HAP/VOC	4.6	106.16		
	Ethylene dibromide - HAP/VOC	1.0E-03	187.88		
	Fluorotrichloromethane - VOC	0.76	137.38		
	Hexane - HAP/VOC	6.6	86.18		
	Hydrogen sulfide	36	34.08		
	Mercury (total) - HAP	2.9E-04	200.61		
	Methyl ethyl ketone - HAP/VOC	7.1	72.11		
	Methyl isobutyl ketone - HAP/VOC	1.9	100.16		
	Methyl mercaptan - VOC	2.5	48.11		
	Pentane - VOC	3.3	72.15		
	Perchloroethylene (tetrachloroethylene) - HAP	3.7	165.83		
	Propane - VOC	11	44.09		
	t-1,2-Dichloroethene - VOC	2.8	96.94		
	Toluene - No or Unknown Co-disposal - HAP/VOC	39	92.13		
	Toluene - Co-disposal - HAP/VOC	170	92.13		
	Trichloroethylene (trichloroethene) - HAP/VOC	2.8	131.40		
	Vinyl chloride - HAP/VOC	7.3	62.50		
	Xylenes - HAP/VOC	12	106.16		

Graphs

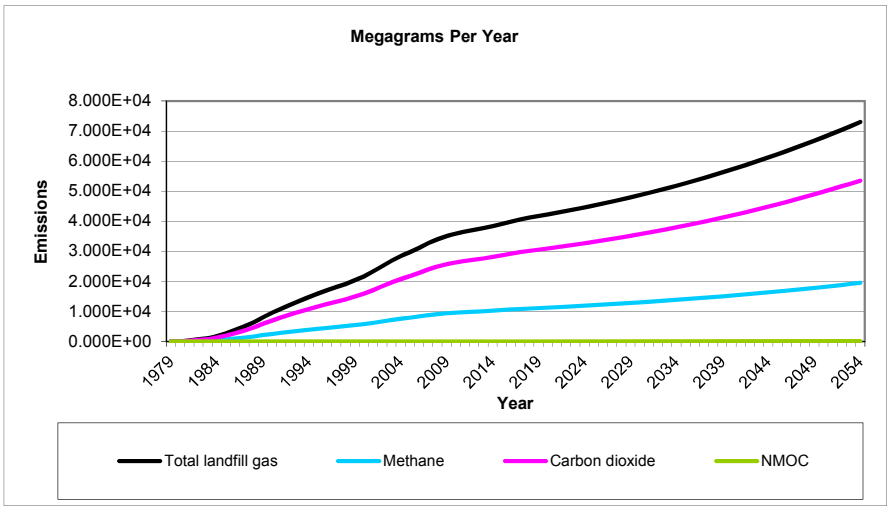
Megagrams Per Year
Emissions
8.000E+04
7.000E+04
6.000E+04
5.000E+04
4.000E+04
3.000E+04
2.000E+04
1.000E+04
0.000E+00
1979
1984
1989
1994
1999
2004
2009
2014
2019
2024
2029
2034
2039
2044
2049
2054
Year
Total landfill gas
Methane
Carbon dioxide
NMOC

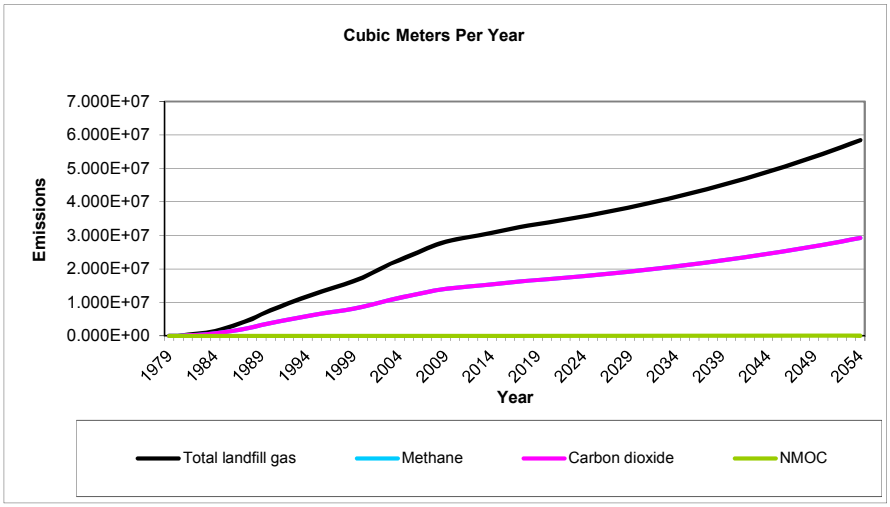
Cubic Meters Per Year
Emissions
7.000E+07
6.000E+07
5.000E+07
4.000E+07
3.000E+07
2.000E+07
1.000E+07
0.000E+00
1979
1984
1989
1994
1999
2004
2009
2014
2019
2024
2029
2034
2039
2044
2049
2054
Year
Total landfill gas
Methane
Carbon dioxide
NMOC

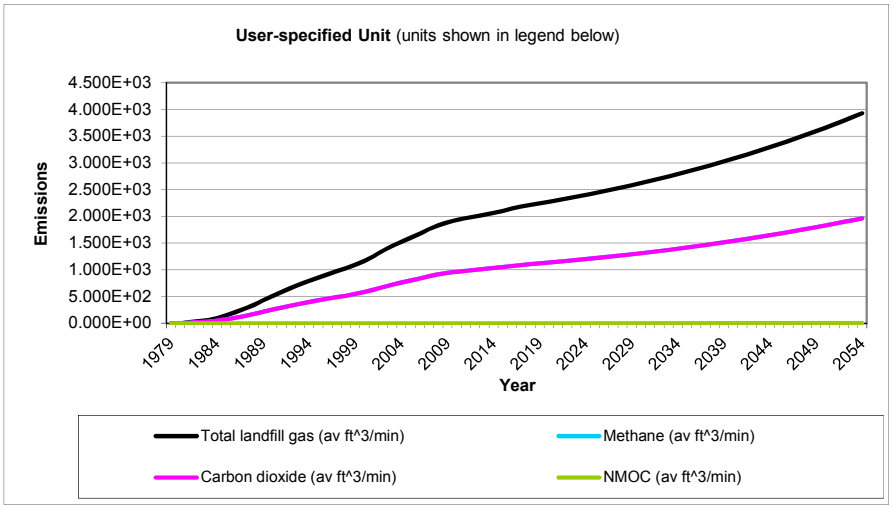
User-specified Unit (units shown in legend below)
Emissions
4.500E+03
4.000E+03
3.500E+03
3.000E+03
2.500E+03
2.000E+03
1.500E+03
1.000E+03
5.000E+02
0.000E+00
1979
1984
1989
1994
1999
2004
2009
2014
2019
2024
2029
2034
2039
2044
2049
2054
Year
Total landfill gas (av ft^3/min)
Methane (av ft^3/min)
Carbon dioxide (av ft^3/min)
NMOC (av ft^3/min)

Results

Year	Total landfill gas			Methane		
	(Mg/year)	*(m^3/year)*	*(av ft^3/min)*	*(Mg/year)*	*(m^3/year)*	*(av ft^3/min)*
1979	0	0	0	0	0	0
1980	1.654E+01	1.324E+04	8.898E-01	4.417E+00	6.621E+03	4.449E-01
1981	3.879E+02	3.106E+05	2.087E+01	1.036E+02	1.553E+05	1.043E+01
1982	7.570E+02	6.062E+05	4.073E+01	2.022E+02	3.031E+05	2.036E+01
1983	1.131E+03	9.057E+05	6.086E+01	3.021E+02	4.529E+05	3.043E+01
1984	1.769E+03	1.417E+06	9.520E+01	4.726E+02	7.084E+05	4.760E+01
1985	2.732E+03	2.188E+06	1.470E+02	7.297E+02	1.094E+06	7.349E+01
1986	3.830E+03	3.067E+06	2.060E+02	1.023E+03	1.533E+06	1.030E+02
1987	5.056E+03	4.048E+06	2.720E+02	1.350E+03	2.024E+06	1.360E+02
1988	6.322E+03	5.062E+06	3.401E+02	1.689E+03	2.531E+06	1.701E+02
1989	8.016E+03	6.418E+06	4.313E+02	2.141E+03	3.209E+06	2.156E+02
1990	9.483E+03	7.594E+06	5.102E+02	2.533E+03	3.797E+06	2.551E+02
1991	1.089E+04	8.724E+06	5.862E+02	2.910E+03	4.362E+06	2.931E+02
1992	1.222E+04	9.788E+06	6.576E+02	3.265E+03	4.894E+06	3.288E+02
1993	1.352E+04	1.082E+07	7.273E+02	3.611E+03	5.412E+06	3.637E+02
1994	1.480E+04	1.185E+07	7.962E+02	3.953E+03	5.925E+06	3.981E+02
1995	1.590E+04	1.273E+07	8.556E+02	4.248E+03	6.367E+06	4.278E+02
1996	1.704E+04	1.365E+07	9.168E+02	4.552E+03	6.823E+06	4.584E+02
1997	1.813E+04	1.452E+07	9.757E+02	4.844E+03	7.261E+06	4.878E+02
1998	1.915E+04	1.533E+07	1.030E+03	5.114E+03	7.666E+06	5.151E+02
1999	2.033E+04	1.628E+07	1.094E+03	5.431E+03	8.141E+06	5.470E+02
2000	2.169E+04	1.737E+07	1.167E+03	5.794E+03	8.684E+06	5.835E+02
2001	2.334E+04	1.869E+07	1.256E+03	6.233E+03	9.343E+06	6.278E+02
2002	2.507E+04	2.008E+07	1.349E+03	6.697E+03	1.004E+07	6.745E+02
2003	2.692E+04	2.156E+07	1.448E+03	7.191E+03	1.078E+07	7.242E+02
2004	2.831E+04	2.267E+07	1.523E+03	7.561E+03	1.133E+07	7.615E+02
2005	2.971E+04	2.379E+07	1.598E+03	7.936E+03	1.190E+07	7.992E+02
2006	3.117E+04	2.496E+07	1.677E+03	8.325E+03	1.248E+07	8.384E+02
2007	3.270E+04	2.618E+07	1.759E+03	8.734E+03	1.309E+07	8.797E+02
2008	3.403E+04	2.725E+07	1.831E+03	9.090E+03	1.362E+07	9.154E+02
2009	3.506E+04	2.807E+07	1.886E+03	9.364E+03	1.404E+07	9.431E+02
2010	3.588E+04	2.873E+07	1.930E+03	9.584E+03	1.436E+07	9.652E+02
2011	3.653E+04	2.925E+07	1.966E+03	9.758E+03	1.463E+07	9.828E+02
2012	3.718E+04	2.977E+07	2.001E+03	9.932E+03	1.489E+07	1.000E+03
2013	3.774E+04	3.022E+07	2.030E+03	1.008E+04	1.511E+07	1.015E+03
2014	3.840E+04	3.075E+07	2.066E+03	1.026E+04	1.537E+07	1.033E+03
2015	3.908E+04	3.129E+07	2.102E+03	1.044E+04	1.564E+07	1.051E+03
2016	3.988E+04	3.194E+07	2.146E+03	1.065E+04	1.597E+07	1.073E+03
2017	4.055E+04	3.247E+07	2.182E+03	1.083E+04	1.624E+07	1.091E+03
2018	4.119E+04	3.298E+07	2.216E+03	1.100E+04	1.649E+07	1.108E+03
2019	4.172E+04	3.341E+07	2.245E+03	1.114E+04	1.670E+07	1.122E+03
2020	4.226E+04	3.384E+07	2.274E+03	1.129E+04	1.692E+07	1.137E+03
2021	4.282E+04	3.429E+07	2.304E+03	1.144E+04	1.714E+07	1.152E+03
2022	4.339E+04	3.474E+07	2.334E+03	1.159E+04	1.737E+07	1.167E+03
2023	4.398E+04	3.522E+07	2.366E+03	1.175E+04	1.761E+07	1.183E+03
2024	4.459E+04	3.571E+07	2.399E+03	1.191E+04	1.785E+07	1.200E+03
2025	4.522E+04	3.621E+07	2.433E+03	1.208E+04	1.811E+07	1.217E+03
2026	4.588E+04	3.674E+07	2.468E+03	1.225E+04	1.837E+07	1.234E+03
2027	4.655E+04	3.727E+07	2.504E+03	1.243E+04	1.864E+07	1.252E+03
2028	4.724E+04	3.783E+07	2.542E+03	1.262E+04	1.891E+07	1.271E+03

Results (Continued)

Year	Total landfill gas			Methane		
	(Mg/year)	*(m^3/year)*	*(av ft^3/min)*	*(Mg/year)*	*(m^3/year)*	*(av ft^3/min)*
2029	4.795E+04	3.840E+07	2.580E+03	1.281E+04	1.920E+07	1.290E+03
2030	4.868E+04	3.898E+07	2.619E+03	1.300E+04	1.949E+07	1.310E+03
2031	4.944E+04	3.959E+07	2.660E+03	1.321E+04	1.979E+07	1.330E+03
2032	5.021E+04	4.021E+07	2.702E+03	1.341E+04	2.010E+07	1.351E+03
2033	5.101E+04	4.084E+07	2.744E+03	1.362E+04	2.042E+07	1.372E+03
2034	5.182E+04	4.150E+07	2.788E+03	1.384E+04	2.075E+07	1.394E+03
2035	5.266E+04	4.217E+07	2.833E+03	1.407E+04	2.108E+07	1.417E+03
2036	5.352E+04	4.286E+07	2.880E+03	1.430E+04	2.143E+07	1.440E+03
2037	5.440E+04	4.356E+07	2.927E+03	1.453E+04	2.178E+07	1.464E+03
2038	5.531E+04	4.429E+07	2.976E+03	1.477E+04	2.214E+07	1.488E+03
2039	5.623E+04	4.503E+07	3.025E+03	1.502E+04	2.251E+07	1.513E+03
2040	5.718E+04	4.579E+07	3.076E+03	1.527E+04	2.289E+07	1.538E+03
2041	5.815E+04	4.657E+07	3.129E+03	1.553E+04	2.328E+07	1.564E+03
2042	5.915E+04	4.736E+07	3.182E+03	1.580E+04	2.368E+07	1.591E+03
2043	6.016E+04	4.818E+07	3.237E+03	1.607E+04	2.409E+07	1.618E+03
2044	6.121E+04	4.901E+07	3.293E+03	1.635E+04	2.451E+07	1.647E+03
2045	6.227E+04	4.986E+07	3.350E+03	1.663E+04	2.493E+07	1.675E+03
2046	6.336E+04	5.074E+07	3.409E+03	1.692E+04	2.537E+07	1.705E+03
2047	6.448E+04	5.163E+07	3.469E+03	1.722E+04	2.582E+07	1.735E+03
2048	6.562E+04	5.254E+07	3.530E+03	1.753E+04	2.627E+07	1.765E+03
2049	6.678E+04	5.348E+07	3.593E+03	1.784E+04	2.674E+07	1.797E+03
2050	6.797E+04	5.443E+07	3.657E+03	1.816E+04	2.722E+07	1.829E+03
2051	6.919E+04	5.541E+07	3.723E+03	1.848E+04	2.770E+07	1.861E+03
2052	7.044E+04	5.640E+07	3.790E+03	1.881E+04	2.820E+07	1.895E+03
2053	7.171E+04	5.742E+07	3.858E+03	1.915E+04	2.871E+07	1.929E+03
2054	7.301E+04	5.846E+07	3.928E+03	1.950E+04	2.923E+07	1.964E+03
2055	7.426E+04	5.946E+07	3.995E+03	1.984E+04	2.973E+07	1.998E+03
2056	7.547E+04	6.043E+07	4.060E+03	2.016E+04	3.022E+07	2.030E+03
2057	7.280E+04	5.829E+07	3.917E+03	1.945E+04	2.915E+07	1.958E+03
2058	7.023E+04	5.623E+07	3.778E+03	1.876E+04	2.812E+07	1.889E+03
2059	6.774E+04	5.424E+07	3.645E+03	1.809E+04	2.712E+07	1.822E+03
2060	6.535E+04	5.233E+07	3.516E+03	1.745E+04	2.616E+07	1.758E+03
2061	6.304E+04	5.048E+07	3.392E+03	1.684E+04	2.524E+07	1.696E+03
2062	6.081E+04	4.869E+07	3.272E+03	1.624E+04	2.435E+07	1.636E+03
2063	5.866E+04	4.697E+07	3.156E+03	1.567E+04	2.348E+07	1.578E+03
2064	5.658E+04	4.531E+07	3.044E+03	1.511E+04	2.265E+07	1.522E+03
2065	5.458E+04	4.371E+07	2.937E+03	1.458E+04	2.185E+07	1.468E+03
2066	5.265E+04	4.216E+07	2.833E+03	1.406E+04	2.108E+07	1.416E+03
2067	5.079E+04	4.067E+07	2.733E+03	1.357E+04	2.034E+07	1.366E+03
2068	4.899E+04	3.923E+07	2.636E+03	1.309E+04	1.962E+07	1.318E+03
2069	4.726E+04	3.785E+07	2.543E+03	1.262E+04	1.892E+07	1.271E+03
2070	4.559E+04	3.651E+07	2.453E+03	1.218E+04	1.825E+07	1.226E+03
2071	4.398E+04	3.522E+07	2.366E+03	1.175E+04	1.761E+07	1.183E+03
2072	4.242E+04	3.397E+07	2.283E+03	1.133E+04	1.699E+07	1.141E+03
2073	4.092E+04	3.277E+07	2.202E+03	1.093E+04	1.638E+07	1.101E+03
2074	3.948E+04	3.161E+07	2.124E+03	1.054E+04	1.581E+07	1.062E+03
2075	3.808E+04	3.049E+07	2.049E+03	1.017E+04	1.525E+07	1.024E+03
2076	3.673E+04	2.942E+07	1.976E+03	9.812E+03	1.471E+07	9.882E+02
2077	3.544E+04	2.837E+07	1.907E+03	9.465E+03	1.419E+07	9.533E+02
2078	3.418E+04	2.737E+07	1.839E+03	9.130E+03	1.369E+07	9.195E+02
2079	3.297E+04	2.640E+07	1.774E+03	8.808E+03	1.320E+07	8.870E+02

Results (Continued)

Year	Total landfill gas			Methane		
	(Mg/year)	*(m^3/year)*	*(av ft^3/min)*	*(Mg/year)*	*(m^3/year)*	*(av ft^3/min)*
2080	3.181E+04	2.547E+07	1.711E+03	8.496E+03	1.274E+07	8.557E+02
2081	3.068E+04	2.457E+07	1.651E+03	8.196E+03	1.228E+07	8.254E+02
2082	2.960E+04	2.370E+07	1.592E+03	7.906E+03	1.185E+07	7.962E+02
2083	2.855E+04	2.286E+07	1.536E+03	7.626E+03	1.143E+07	7.681E+02
2084	2.754E+04	2.205E+07	1.482E+03	7.357E+03	1.103E+07	7.409E+02
2085	2.657E+04	2.127E+07	1.429E+03	7.097E+03	1.064E+07	7.147E+02
2086	2.563E+04	2.052E+07	1.379E+03	6.846E+03	1.026E+07	6.894E+02
2087	2.472E+04	1.980E+07	1.330E+03	6.604E+03	9.898E+06	6.651E+02
2088	2.385E+04	1.910E+07	1.283E+03	6.370E+03	9.548E+06	6.415E+02
2089	2.300E+04	1.842E+07	1.238E+03	6.145E+03	9.211E+06	6.189E+02
2090	2.219E+04	1.777E+07	1.194E+03	5.928E+03	8.885E+06	5.970E+02
2091	2.141E+04	1.714E+07	1.152E+03	5.718E+03	8.571E+06	5.759E+02
2092	2.065E+04	1.654E+07	1.111E+03	5.516E+03	8.268E+06	5.555E+02
2093	1.992E+04	1.595E+07	1.072E+03	5.321E+03	7.975E+06	5.359E+02
2094	1.922E+04	1.539E+07	1.034E+03	5.133E+03	7.693E+06	5.169E+02
2095	1.854E+04	1.484E+07	9.973E+02	4.951E+03	7.421E+06	4.986E+02
2096	1.788E+04	1.432E+07	9.620E+02	4.776E+03	7.159E+06	4.810E+02
2097	1.725E+04	1.381E+07	9.280E+02	4.607E+03	6.906E+06	4.640E+02
2098	1.664E+04	1.332E+07	8.952E+02	4.444E+03	6.662E+06	4.476E+02
2099	1.605E+04	1.285E+07	8.635E+02	4.287E+03	6.426E+06	4.318E+02
2100	1.548E+04	1.240E+07	8.330E+02	4.136E+03	6.199E+06	4.165E+02
2101	1.494E+04	1.196E+07	8.035E+02	3.989E+03	5.980E+06	4.018E+02
2102	1.441E+04	1.154E+07	7.751E+02	3.848E+03	5.768E+06	3.876E+02
2103	1.390E+04	1.113E+07	7.477E+02	3.712E+03	5.564E+06	3.739E+02
2104	1.341E+04	1.073E+07	7.213E+02	3.581E+03	5.367E+06	3.606E+02
2105	1.293E+04	1.036E+07	6.958E+02	3.454E+03	5.178E+06	3.479E+02
2106	1.247E+04	9.989E+06	6.712E+02	3.332E+03	4.995E+06	3.356E+02
2107	1.203E+04	9.636E+06	6.474E+02	3.214E+03	4.818E+06	3.237E+02
2108	1.161E+04	9.295E+06	6.245E+02	3.101E+03	4.648E+06	3.123E+02
2109	1.120E+04	8.967E+06	6.025E+02	2.991E+03	4.483E+06	3.012E+02
2110	1.080E+04	8.650E+06	5.812E+02	2.885E+03	4.325E+06	2.906E+02
2111	1.042E+04	8.344E+06	5.606E+02	2.783E+03	4.172E+06	2.803E+02
2112	1.005E+04	8.049E+06	5.408E+02	2.685E+03	4.024E+06	2.704E+02
2113	9.696E+03	7.764E+06	5.217E+02	2.590E+03	3.882E+06	2.608E+02
2114	9.353E+03	7.490E+06	5.032E+02	2.498E+03	3.745E+06	2.516E+02
2115	9.022E+03	7.225E+06	4.854E+02	2.410E+03	3.612E+06	2.427E+02
2116	8.703E+03	6.969E+06	4.683E+02	2.325E+03	3.485E+06	2.341E+02
2117	8.396E+03	6.723E+06	4.517E+02	2.243E+03	3.361E+06	2.259E+02
2118	8.099E+03	6.485E+06	4.357E+02	2.163E+03	3.243E+06	2.179E+02
2119	7.812E+03	6.256E+06	4.203E+02	2.087E+03	3.128E+06	2.102E+02

Results (Continued)

Year	Carbon dioxide			NMOC		
	(Mg/year)	*(m^3/year)*	*(av ft^3/min)*	*(Mg/year)*	*(m^3/year)*	*(av ft^3/min)*
1979	0	0	0	0	0	0
1980	1.212E+01	6.621E+03	4.449E-01	2.824E-02	7.879E+00	5.294E-04
1981	2.843E+02	1.553E+05	1.043E+01	6.624E-01	1.848E+02	1.242E-02
1982	5.548E+02	3.031E+05	2.036E+01	1.293E+00	3.607E+02	2.423E-02
1983	8.290E+02	4.529E+05	3.043E+01	1.932E+00	5.389E+02	3.621E-02
1984	1.297E+03	7.084E+05	4.760E+01	3.022E+00	8.430E+02	5.664E-02
1985	2.002E+03	1.094E+06	7.349E+01	4.666E+00	1.302E+03	8.746E-02
1986	2.807E+03	1.533E+06	1.030E+02	6.540E+00	1.825E+03	1.226E-01
1987	3.705E+03	2.024E+06	1.360E+02	8.634E+00	2.409E+03	1.618E-01
1988	4.633E+03	2.531E+06	1.701E+02	1.080E+01	3.012E+03	2.024E-01
1989	5.875E+03	3.209E+06	2.156E+02	1.369E+01	3.819E+03	2.566E-01
1990	6.950E+03	3.797E+06	2.551E+02	1.620E+01	4.518E+03	3.036E-01
1991	7.985E+03	4.362E+06	2.931E+02	1.861E+01	5.191E+03	3.488E-01
1992	8.958E+03	4.894E+06	3.288E+02	2.087E+01	5.824E+03	3.913E-01
1993	9.907E+03	5.412E+06	3.637E+02	2.309E+01	6.441E+03	4.328E-01
1994	1.085E+04	5.925E+06	3.981E+02	2.527E+01	7.051E+03	4.738E-01
1995	1.166E+04	6.367E+06	4.278E+02	2.716E+01	7.577E+03	5.091E-01
1996	1.249E+04	6.823E+06	4.584E+02	2.910E+01	8.119E+03	5.455E-01
1997	1.329E+04	7.261E+06	4.878E+02	3.097E+01	8.640E+03	5.805E-01
1998	1.403E+04	7.666E+06	5.151E+02	3.270E+01	9.122E+03	6.129E-01
1999	1.490E+04	8.141E+06	5.470E+02	3.473E+01	9.688E+03	6.509E-01
2000	1.590E+04	8.684E+06	5.835E+02	3.704E+01	1.033E+04	6.943E-01
2001	1.710E+04	9.343E+06	6.278E+02	3.985E+01	1.112E+04	7.471E-01
2002	1.838E+04	1.004E+07	6.745E+02	4.282E+01	1.195E+04	8.026E-01
2003	1.973E+04	1.078E+07	7.242E+02	4.598E+01	1.283E+04	8.618E-01
2004	2.075E+04	1.133E+07	7.615E+02	4.834E+01	1.349E+04	9.062E-01
2005	2.177E+04	1.190E+07	7.992E+02	5.074E+01	1.416E+04	9.511E-01
2006	2.284E+04	1.248E+07	8.384E+02	5.323E+01	1.485E+04	9.977E-01
2007	2.397E+04	1.309E+07	8.797E+02	5.584E+01	1.558E+04	1.047E+00
2008	2.494E+04	1.362E+07	9.154E+02	5.812E+01	1.621E+04	1.089E+00
2009	2.569E+04	1.404E+07	9.431E+02	5.987E+01	1.670E+04	1.122E+00
2010	2.630E+04	1.436E+07	9.652E+02	6.127E+01	1.709E+04	1.149E+00
2011	2.677E+04	1.463E+07	9.828E+02	6.239E+01	1.741E+04	1.169E+00
2012	2.725E+04	1.489E+07	1.000E+03	6.350E+01	1.772E+04	1.190E+00
2013	2.766E+04	1.511E+07	1.015E+03	6.445E+01	1.798E+04	1.208E+00
2014	2.814E+04	1.537E+07	1.033E+03	6.557E+01	1.829E+04	1.229E+00
2015	2.864E+04	1.564E+07	1.051E+03	6.673E+01	1.862E+04	1.251E+00
2016	2.923E+04	1.597E+07	1.073E+03	6.811E+01	1.900E+04	1.277E+00
2017	2.972E+04	1.624E+07	1.091E+03	6.926E+01	1.932E+04	1.298E+00
2018	3.019E+04	1.649E+07	1.108E+03	7.034E+01	1.962E+04	1.319E+00
2019	3.058E+04	1.670E+07	1.122E+03	7.125E+01	1.988E+04	1.336E+00
2020	3.097E+04	1.692E+07	1.137E+03	7.218E+01	2.014E+04	1.353E+00
2021	3.138E+04	1.714E+07	1.152E+03	7.312E+01	2.040E+04	1.371E+00
2022	3.180E+04	1.737E+07	1.167E+03	7.410E+01	2.067E+04	1.389E+00
2023	3.223E+04	1.761E+07	1.183E+03	7.511E+01	2.095E+04	1.408E+00
2024	3.268E+04	1.785E+07	1.200E+03	7.616E+01	2.125E+04	1.428E+00
2025	3.314E+04	1.811E+07	1.217E+03	7.724E+01	2.155E+04	1.448E+00
2026	3.362E+04	1.837E+07	1.234E+03	7.835E+01	2.186E+04	1.469E+00
2027	3.411E+04	1.864E+07	1.252E+03	7.949E+01	2.218E+04	1.490E+00
2028	3.462E+04	1.891E+07	1.271E+03	8.068E+01	2.251E+04	1.512E+00

Results (Continued)

Year	Carbon dioxide			NMOC		
	(Mg/year)	*(m^3/year)*	*(av ft^3/min)*	*(Mg/year)*	*(m^3/year)*	*(av ft^3/min)*
2029	3.514E+04	1.920E+07	1.290E+03	8.189E+01	2.285E+04	1.535E+00
2030	3.568E+04	1.949E+07	1.310E+03	8.314E+01	2.320E+04	1.559E+00
2031	3.623E+04	1.979E+07	1.330E+03	8.443E+01	2.355E+04	1.583E+00
2032	3.680E+04	2.010E+07	1.351E+03	8.575E+01	2.392E+04	1.607E+00
2033	3.738E+04	2.042E+07	1.372E+03	8.711E+01	2.430E+04	1.633E+00
2034	3.798E+04	2.075E+07	1.394E+03	8.851E+01	2.469E+04	1.659E+00
2035	3.860E+04	2.108E+07	1.417E+03	8.994E+01	2.509E+04	1.686E+00
2036	3.923E+04	2.143E+07	1.440E+03	9.140E+01	2.550E+04	1.713E+00
2037	3.987E+04	2.178E+07	1.464E+03	9.291E+01	2.592E+04	1.742E+00
2038	4.053E+04	2.214E+07	1.488E+03	9.445E+01	2.635E+04	1.770E+00
2039	4.121E+04	2.251E+07	1.513E+03	9.603E+01	2.679E+04	1.800E+00
2040	4.191E+04	2.289E+07	1.538E+03	9.765E+01	2.724E+04	1.830E+00
2041	4.262E+04	2.328E+07	1.564E+03	9.931E+01	2.771E+04	1.862E+00
2042	4.335E+04	2.368E+07	1.591E+03	1.010E+02	2.818E+04	1.893E+00
2043	4.409E+04	2.409E+07	1.618E+03	1.027E+02	2.867E+04	1.926E+00
2044	4.486E+04	2.451E+07	1.647E+03	1.045E+02	2.916E+04	1.959E+00
2045	4.564E+04	2.493E+07	1.675E+03	1.063E+02	2.967E+04	1.993E+00
2046	4.644E+04	2.537E+07	1.705E+03	1.082E+02	3.019E+04	2.028E+00
2047	4.725E+04	2.582E+07	1.735E+03	1.101E+02	3.072E+04	2.064E+00
2048	4.809E+04	2.627E+07	1.765E+03	1.121E+02	3.126E+04	2.101E+00
2049	4.894E+04	2.674E+07	1.797E+03	1.141E+02	3.182E+04	2.138E+00
2050	4.982E+04	2.722E+07	1.829E+03	1.161E+02	3.239E+04	2.176E+00
2051	5.071E+04	2.770E+07	1.861E+03	1.182E+02	3.297E+04	2.215E+00
2052	5.162E+04	2.820E+07	1.895E+03	1.203E+02	3.356E+04	2.255E+00
2053	5.255E+04	2.871E+07	1.929E+03	1.225E+02	3.417E+04	2.296E+00
2054	5.351E+04	2.923E+07	1.964E+03	1.247E+02	3.478E+04	2.337E+00
2055	5.442E+04	2.973E+07	1.998E+03	1.268E+02	3.538E+04	2.377E+00
2056	5.531E+04	3.022E+07	2.030E+03	1.289E+02	3.596E+04	2.416E+00
2057	5.335E+04	2.915E+07	1.958E+03	1.243E+02	3.469E+04	2.330E+00
2058	5.147E+04	2.812E+07	1.889E+03	1.199E+02	3.346E+04	2.248E+00
2059	4.965E+04	2.712E+07	1.822E+03	1.157E+02	3.228E+04	2.169E+00
2060	4.789E+04	2.616E+07	1.758E+03	1.116E+02	3.113E+04	2.092E+00
2061	4.620E+04	2.524E+07	1.696E+03	1.077E+02	3.003E+04	2.018E+00
2062	4.457E+04	2.435E+07	1.636E+03	1.038E+02	2.897E+04	1.947E+00
2063	4.299E+04	2.348E+07	1.578E+03	1.002E+02	2.795E+04	1.878E+00
2064	4.147E+04	2.265E+07	1.522E+03	9.663E+01	2.696E+04	1.811E+00
2065	4.000E+04	2.185E+07	1.468E+03	9.322E+01	2.601E+04	1.747E+00
2066	3.859E+04	2.108E+07	1.416E+03	8.992E+01	2.509E+04	1.686E+00
2067	3.722E+04	2.034E+07	1.366E+03	8.674E+01	2.420E+04	1.626E+00
2068	3.591E+04	1.962E+07	1.318E+03	8.367E+01	2.334E+04	1.568E+00
2069	3.464E+04	1.892E+07	1.271E+03	8.071E+01	2.252E+04	1.513E+00
2070	3.341E+04	1.825E+07	1.226E+03	7.786E+01	2.172E+04	1.459E+00
2071	3.223E+04	1.761E+07	1.183E+03	7.511E+01	2.095E+04	1.408E+00
2072	3.109E+04	1.699E+07	1.141E+03	7.245E+01	2.021E+04	1.358E+00
2073	2.999E+04	1.638E+07	1.101E+03	6.989E+01	1.950E+04	1.310E+00
2074	2.893E+04	1.581E+07	1.062E+03	6.742E+01	1.881E+04	1.264E+00
2075	2.791E+04	1.525E+07	1.024E+03	6.503E+01	1.814E+04	1.219E+00
2076	2.692E+04	1.471E+07	9.882E+02	6.274E+01	1.750E+04	1.176E+00
2077	2.597E+04	1.419E+07	9.533E+02	6.052E+01	1.688E+04	1.134E+00
2078	2.505E+04	1.369E+07	9.195E+02	5.838E+01	1.629E+04	1.094E+00
2079	2.417E+04	1.320E+07	8.870E+02	5.631E+01	1.571E+04	1.056E+00

Results (Continued)

Year	Carbon dioxide			NMOC		
	(Mg/year)	*(m^3/year)*	*(av ft^3/min)*	*(Mg/year)*	*(m^3/year)*	*(av ft^3/min)*
2080	2.331E+04	1.274E+07	8.557E+02	5.432E+01	1.515E+04	1.018E+00
2081	2.249E+04	1.228E+07	8.254E+02	5.240E+01	1.462E+04	9.822E-01
2082	2.169E+04	1.185E+07	7.962E+02	5.055E+01	1.410E+04	9.475E-01
2083	2.093E+04	1.143E+07	7.681E+02	4.876E+01	1.360E+04	9.140E-01
2084	2.019E+04	1.103E+07	7.409E+02	4.704E+01	1.312E+04	8.817E-01
2085	1.947E+04	1.064E+07	7.147E+02	4.537E+01	1.266E+04	8.505E-01
2086	1.878E+04	1.026E+07	6.894E+02	4.377E+01	1.221E+04	8.204E-01
2087	1.812E+04	9.898E+06	6.651E+02	4.222E+01	1.178E+04	7.914E-01
2088	1.748E+04	9.548E+06	6.415E+02	4.073E+01	1.136E+04	7.634E-01
2089	1.686E+04	9.211E+06	6.189E+02	3.929E+01	1.096E+04	7.364E-01
2090	1.626E+04	8.885E+06	5.970E+02	3.790E+01	1.057E+04	7.104E-01
2091	1.569E+04	8.571E+06	5.759E+02	3.656E+01	1.020E+04	6.853E-01
2092	1.513E+04	8.268E+06	5.555E+02	3.527E+01	9.839E+03	6.611E-01
2093	1.460E+04	7.975E+06	5.359E+02	3.402E+01	9.491E+03	6.377E-01
2094	1.408E+04	7.693E+06	5.169E+02	3.282E+01	9.155E+03	6.151E-01
2095	1.358E+04	7.421E+06	4.986E+02	3.166E+01	8.831E+03	5.934E-01
2096	1.310E+04	7.159E+06	4.810E+02	3.054E+01	8.519E+03	5.724E-01
2097	1.264E+04	6.906E+06	4.640E+02	2.946E+01	8.218E+03	5.522E-01
2098	1.219E+04	6.662E+06	4.476E+02	2.842E+01	7.927E+03	5.326E-01
2099	1.176E+04	6.426E+06	4.318E+02	2.741E+01	7.647E+03	5.138E-01
2100	1.135E+04	6.199E+06	4.165E+02	2.644E+01	7.377E+03	4.956E-01
2101	1.095E+04	5.980E+06	4.018E+02	2.551E+01	7.116E+03	4.781E-01
2102	1.056E+04	5.768E+06	3.876E+02	2.460E+01	6.864E+03	4.612E-01
2103	1.019E+04	5.564E+06	3.739E+02	2.373E+01	6.621E+03	4.449E-01
2104	9.825E+03	5.367E+06	3.606E+02	2.290E+01	6.387E+03	4.292E-01
2105	9.478E+03	5.178E+06	3.479E+02	2.209E+01	6.161E+03	4.140E-01
2106	9.143E+03	4.995E+06	3.356E+02	2.130E+01	5.944E+03	3.993E-01
2107	8.819E+03	4.818E+06	3.237E+02	2.055E+01	5.733E+03	3.852E-01
2108	8.508E+03	4.648E+06	3.123E+02	1.982E+01	5.531E+03	3.716E-01
2109	8.207E+03	4.483E+06	3.012E+02	1.912E+01	5.335E+03	3.585E-01
2110	7.916E+03	4.325E+06	2.906E+02	1.845E+01	5.146E+03	3.458E-01
2111	7.637E+03	4.172E+06	2.803E+02	1.780E+01	4.965E+03	3.336E-01
2112	7.367E+03	4.024E+06	2.704E+02	1.717E+01	4.789E+03	3.218E-01
2113	7.106E+03	3.882E+06	2.608E+02	1.656E+01	4.620E+03	3.104E-01
2114	6.855E+03	3.745E+06	2.516E+02	1.597E+01	4.456E+03	2.994E-01
2115	6.612E+03	3.612E+06	2.427E+02	1.541E+01	4.299E+03	2.888E-01
2116	6.379E+03	3.485E+06	2.341E+02	1.486E+01	4.147E+03	2.786E-01
2117	6.153E+03	3.361E+06	2.259E+02	1.434E+01	4.000E+03	2.688E-01
2118	5.935E+03	3.243E+06	2.179E+02	1.383E+01	3.859E+03	2.593E-01
2119	5.726E+03	3.128E+06	2.102E+02	1.334E+01	3.722E+03	2.501E-01

APPENDIX D

LANDFILL METHANE RULE (LMR) SURFACE EMISSIONS MONITORING PLAN

cornerstone
A TETRA TECH COMPANY

Building lifetime relationships with our clients and employees.

Landfill Methane Rule Surface Emissions Monitoring Plan

Western Regional Sanitary Landfill

May 2016

Prepared for:
Western Placer Waste Management Authority
3195 Athens Avenue
Lincoln, CA 95468

7600 Dublin Blvd., Suite 200
Dublin, CA 94568
(877) 633-5520

Revision History

Landfill Methane Rule (LMR) Surface Emissions Monitoring (SEM) Plan

Western Regional Sanitary Landfill
Lincoln, California

Add the effective date of the most recent revision to the list below. Do not overwrite or delete any dates. This is intended to be a complete record of all revisions made to this Plan, and assists in making certain that all plan revisions are retained at least five (5) years as required by California Code of Regulations (CCR) Title 17 §95470(a)(1)(D).

Date of Initial Issuance
November 2, 2011
REVISION DATES
May 20, 2016

TABLE OF CONTENTS

REVISION HISTORY II

1 INTRODUCTION 4

1.1 PURPOSE OF PLAN 4

2 LMR SURFACE EMISSIONS MONITORING PLAN 5

2.1 SEM REQUIREMENTS 5

2.1.1 ALTERNATIVE REQUESTS 5

2.1.2 MONITORING AREA AND GRIDS 5

2.1.3 WEATHER CONDITIONS 6

2.1.4 FREQUENCY 7

2.1.5 RECORDKEEPING 8

2.2 INSTANTANEOUS SEM REQUIREMENTS 8

2.2.1 INSTANTANEOUS SEM PROCEDURES 8

2.2.2 INSTANTANEOUS SEM MONITORING EQUIPMENT 10

2.2.3 200 PPMV METHANE INSTANTANEOUS SEM EXCEEDANCES 11

2.2.4 500 PPMV METHANE INSTANTANEOUS SEM EXCEEDANCES 11

2.3 INTEGRATED SEM REQUIREMENTS 13

2.3.1 INTEGRATED SEM PROCEDURES 13

2.3.2 INTEGRATED SEM MONITORING EQUIPMENT 14

2.3.3 INTEGRATED SEM RESULTS BELOW 25 PPMV 14

2.3.4 25 PPMV INTEGRATED SEM EXCEEDANCES 15

LIMITATIONS 17

APPENDICES

APPENDIX A PCAPCD CORRESPONDENCE

APPENDIX B APPROVED ALTERNATIVE COMPLIANCE OPTIONS SUMMARY

APPENDIX C INSTANTANEOUS AND INTEGRATED SEM EVENT MAP

APPENDIX D LMR SURFACE EMISSIONS MONITORING REPORT TEMPLATE

1 INTRODUCTION

1.1 Purpose of Plan

The Western Regional Sanitary Landfill (WRSL) is an active landfill located in Lincoln, Placer County, California, owned and operated by the Western Placer Waste Management Authority (WPWMA). This Surface Emissions Monitoring (SEM) Plan (Plan) has been prepared by Cornerstone on behalf of WPWMA to provide a monitoring protocol in compliance with the requirements of the California Code of Regulations (CCR) Title 17, Division 3, Chapter 1, Subchapter 10, Article 4, Subarticle 6, Methane Emissions from Municipal Solid Waste Landfills (CCR Title 17) Landfill Methane Rule (LMR), as mandated by Assembly Bill (AB) 32.

WRSL is subject to the SEM requirements of CCR Title 17 per §95463(b) because the waste-in-place (WIP) is greater than 450,000 tons and heat input capacity (HIC) of WRSL exceeds 3.0 million British thermal units per hour (MMBTU/hr). A landfill gas collection and control system (GCCS) has been installed at WRSL and is in continuous operation. Surface emissions will be monitored quarterly, as required by regulations and as described in this SEM Plan, unless otherwise approved.

2 LMR SURFACE EMISSIONS MONITORING PLAN

2.1 SEM Requirements

The purpose of SEM is to ensure that no location on the municipal solid waste (MSW) landfill surface exceeds 500 parts per million by volume (ppmv) (other than non-repeatable, momentary readings) during instantaneous SEM, nor any identified approximately 50,000 square foot (ft^2) grid exceed an average methane concentration of 25 ppmv methane during integrated SEM. Pursuant to CCR Title 17 §95469(a), instantaneous and integrated surface monitoring must be conducted on a quarterly basis unless otherwise approved. Due to a delay in implementation, per the California Air Resources Board (CARB), December 1, 2010 MSW Landfill Regulation Regulatory Advisory, the SEM became effective and starting July 1, 2011. The following test methods and procedures for surface emissions testing satisfy 40 Code of Federal Regulations (CFR) §60.753 (d) and the requirements of CCR Title 17 §95471.

2.1.1 Alternative Requests

Pursuant to CCR Title 17 §95468, WPWMA may request alternatives to the compliance measures, monitoring requirements, test methods and procedures of CCR Title 17 §95464, §95469, and §95471. The landfill owner or operator must file a written request with an explanation of the alternative compliance option (ACO) with the Executive Officer (EO), in this case the Placer County Air Pollution Control District (PCAPCD). The EO shall notify the landfill owner or operator in writing of the decision. An ACO Request was submitted to the PCAPCD on February 29, 2012, per CCR Title 17 §95468(a). A formal response to the ACO request was received by the Western Placer Waste Management Authority (WPWMA) on August 7, 2012.

Within this Plan, a brief description of approved ACO requests are included at the end of each section identifying any applicable alternative methods. ACO requests are included in Appendix A, PCAPCD Correspondence. Detailed ACO requirements are included within Appendix B, Approved Alternative Compliance Options Summary.

2.1.2 Monitoring Area and Grids

Pursuant to CCR Title 17 §95471(c)(1), the entire landfill surface must be divided into individually identified approximately 50,000 ft^2 grids, which shall be used for both instantaneous and integrated SEM. Appendix C contains an SEM Grid Map for WRSL which was developed in accordance with the requirements of CCR Title 17 §95471(c)(1):

- The walking pattern must be no more than a 25-foot spacing interval and must traverse each grid;

  - Per CCR Title 17 §95471(c)(1)(B)(1) and (2), if no SEM exceedances (refer to Sections 2.2 and 2.3 for instantaneous and integrated SEM exceedance limits) were detected in the past *three years prior to the effective date (July 1, 2011)* or are detected *after four consecutive quarterly monitoring events*, the walking pattern spacing may be increased to 100-foot intervals. If SEM exceedances are detected and cannot be remediated within ten calendar days or are detected during a compliance inspection, the landfill must return to a 25-foot spacing interval;
- The sampling path resembles a "serpentine" pattern which traverses the grid; and
- The walking pace should be approximately 100 feet per minute, except when limited by terrain or vegetation.

As of the date of this Plan, WRSL is divided into a total of 206 individual monitoring grids. The SEM Grid Map is located in Appendix C.

The following ACO requests are approved for monitoring areas and grids:

ACO Summary Description	Date Approved
Areas containing only asbestos-containing waste, inert waste, or non-decomposable waste.	August 7, 2012
Areas with a 25% slope or greater can be excluded.	August 7, 2012
Since landfills are not sized in 50,000 square foot increments, grid segments are allowed to be slightly larger or smaller than 50,000 square feet along waste area boundaries and around areas that cannot be subjected to SEM due to safety reasons.	August 7, 2012

The ACO requests are included in Appendix A, PCAPCD Correspondence. Detailed ACO requirements are included within Appendix B, Approved Alternative Compliance Options Summary.

2.1.3 Weather Conditions

Monitoring will be performed during typical meteorological conditions. The onsite weather station will be used for monitoring and recording wind speed data during the SEM events and reviewing periods of rainfall. The onsite weather station continuously measures and records wind speed and weather data. The onsite weather station is located at the scale house and can be seen on the Placer County website at:

http://www.placer.ca.gov/Departments/Facility/facweather.aspx

The field technician will check the wind speed using a hand-held anemometer. The wind speed will be measured and recorded to ensure the 15 minute averaged speed does not

exceed 10 mph or the instantaneous wind speed does not exceed 20 mph, per the approved ACO (see below).

The field technician will also confirm the surface of WRSL is dry enough to traverse safely and there has been no measured precipitation within the past 24 hours, per the approved ACO (see below). Historical weather data at the onsite weather station will be checked prior to conducting SEM to ensure there has been no measurable precipitation in the preceding 24 hours.

The following ACO requests are approved for weather conditions:

ACO Summary Description	Date Approved
The District will accept alternative wind speeds of the following: If the average wind speed exceeds 10 miles per hour (mph), or the instantaneous wind speed exceeds 20 mph, surface testing can be terminated until the wind speed decreases and is within the acceptable limits.	August 7, 2012
The District will allow surface monitoring when there has been no measureable precipitation in the preceding 24 hours. WPWMA will minimize the times when SEM is conducted with precipitation in the preceding 24 to 72 hours.	August 7, 2012

The ACO requests are included in Appendix A, PCAPCD Correspondence. Detailed ACO requirements are included within Appendix B, Approved Alternative Compliance Options Summary.

2.1.4 Frequency

SEM will be performed quarterly (calendar basis) for the portion of the landfill with an active GCCS.

If portions of WRSL are closed or inactive, and if there is no measured instantaneous methane reading greater than 500 ppmv after four (4) consecutive quarterly monitoring periods, WRSL may thereafter perform SEM on an annual basis. Any exceedance of the 500 ppmv limit that cannot be remediated within 10 calendar days will result in a return to quarterly SEM of WRSL.

For a closed or inactive municipal solid waste (MSW) landfill, if there is no measured concentration of 200 ppmv methane or greater from the surface of the landfill, pursuant to CCR Title 17 §95463 (b)(2)(B)(3), WRSL may discontinue surface monitoring. WRSL must, however, submit a WIP report per CCR Title 17 §95470(b)(4) and all instantaneous surface monitoring records for review and approval by the EO within 90 days.

The following ACO requests are approved for SEM frequency:

ACO Summary Description	Date Approved
The District will allow closed areas designated as Modules 1, 2, 10 and 11 to be tested annually. If an exceedance of the limits is measured, then the testing of the affected area shall return to quarterly testing.	August 7, 2012

The ACO requests are included in Appendix A, PCAPCD Correspondence. Detailed ACO requirements are included within Appendix B, Approved Alternative Compliance Options Summary.

2.1.5 Recordkeeping

Per CCR Title 17 §95470, instantaneous and integrated SEM records must be stored onsite and be readily accessible in either a paper or electronic format. These records shall be kept for at least five (5) years. These records shall include calibration forms, weather data, the location and reading of the exceedance, as well as the results of the follow-up readings in the subsequent months (whether or not these readings were exceedances), the action taken to repair the area, and the date of the repair.

Alternative recordkeeping requirements may be allowed, following approval of an ACO request, as described in Section 2.1.1. The following ACO requests are approved for recordkeeping:

ACO Summary Description	Date Approved

The ACO requests are included in Appendix A, PCAPCD Correspondence. Detailed ACO requirements are included within Appendix B, Approved Alternative Compliance Options Summary.

2.2 Instantaneous SEM Requirements

2.2.1 Instantaneous SEM Procedures

Prior to initiating the instantaneous SEM monitoring event, the field technician will:

- Confirm the surface of WRSL is dry enough to traverse safely and there has been no measured precipitation within the past 24 hours, per the approved ACO (see Section 2.1.3);
- Check the wind speed using a hand-held anemometer. The wind speed will be measured and recorded to ensure the 15 minute averaged speed does not exceed 10 mph or the instantaneous wind speed does not exceed 20 mph, per the approved ACO (See Section 2.1.3);
- Assess the monitoring grids, locate grid boundaries, and on the SEM map identify all inaccessible areas;
- Calibrate the monitoring equipment (see Section 2.2.2); and
- Establish background methane concentrations by waving the wand of the flame ionization detector (FID) upwind and downwind outside the boundary of the landfill from a distance of at least 30 meters from perimeter wells.

During the instantaneous SEM monitoring event, the field technician will employ the following procedures:

- For each monitoring grid, the field technician will follow the traverse walking path and hold the monitoring probe no more than three (3) inches above the landfill surface;
- Continuously record the wind speed using the onsite anemometer and check the instantaneous wind speed periodically with a hand-held anemometer to ensure instantaneous wind speed does not exceed 20 mph, per the approved ACO;
- Document on the Exceedance and Monitoring Log and on the grid map 200 ppmv and 500 ppmv exceedance locations, along with any re-test dates and results (See Sections 2.2.3 and 2.2.4);
- While walking, the probe should be slowly moved from side to side to cover a path of four (4) to six (6) feet wide (approximately two [2] to three [3] feet on each side);
- Any areas where visual observations indicate elevated concentrations of landfill gas (LFG), such as distressed vegetation and cracks or seeps in the cover, will be visually inspected and monitored;
- A constant walking pace of approximately 100 feet per minute should be maintained except when limited by terrain or vegetation; and
- If the pace is interrupted for more than 10 to 15 seconds, the data logging should be paused and the cause should be noted on recordkeeping forms.

The following ACO requests are approved for procedures required prior to instantaneous SEM:

ACO Summary Description	Date Approved
The wand tip of the FID may be held within 3 inches of the top of vegetation in areas where the landfill surface is covered with low-lying vegetation such as grasses, while traversing the grid.	August 7, 2012

The ACO requests are included in Appendix A, PCAPCD Correspondence. Detailed ACO requirements are included within Appendix B, Approved Alternative Compliance Options Summary.

2.2.2 Instantaneous SEM Monitoring Equipment

An organic vapor analyzer, FID, or other portable hydrocarbon detector in general conformance with 40 CFR Part 60, Appendix A, Method 21 will be used to determine the methane concentration at each sampling point, pursuant to CCR Title 17 §95471(a). The instrument will be calibrated according to the manufacturer's recommendations prior to each monitoring period and calibration results recorded on the calibration forms located in Attachment A of the Surface Emissions Monitoring Report Template. The SEM Report Template is included in Appendix D.

A hand-held anemometer will be used for monitoring instantaneous wind speed. The onsite weather station will be used to record wind speed and weather data.

Alternative instantaneous SEM monitoring equipment may be allowed following approval of an ACO request, as described in Section 2.1.1. The following ACO requests are approved for instantaneous SEM monitoring equipment:

ACO Summary Description	Date Approved

The ACO requests are included in Appendix A, PCAPCD Correspondence. Detailed ACO requirements are included within Appendix B, Approved Alternative Compliance Options Summary.

2.2.3 200 PPMV Methane Instantaneous SEM Exceedances

In accordance with CCR Title 17 §95471(c)(2), the field technician must record instantaneous surface emissions readings ranging from 200 ppmv to 500 ppmv methane using the Instantaneous SEM 200 ppmv Exceedance and Monitoring Log, located in Attachment B of the LMR Surface Emissions Monitoring Report. The LMR Surface Emissions Monitoring Report Template is included in Appendix D of this Plan.

The field technician will record the date, time, grid and instantaneous reading location, methane concentration, and any additional comments. If multiple readings are observed in a given area, the technician will delineate the area with exceedances on the map and document the readings observed. Per CCR Title 17 §95471(c), instantaneous surface emissions from 200 ppmv up to and including 500 ppmv methane readings are only required to be recorded. No remedial action is required.

Alternatives may be approved for instantaneous SEM readings of 200 to 500 ppmv following approval of an ACO request, as described in Section 2.1.1. The following ACO requests are approved for instantaneous SEM readings of 200 to 500 ppmv:

ACO Summary Description	Date Approved

The ACO requests are included in Appendix A, PCAPCD Correspondence. Detailed ACO requirements are included within Appendix B, Approved Alternative Compliance Options Summary.

2.2.4 500 PPMV Methane Instantaneous SEM Exceedances

In accordance with CCR Title 17 §95471(c)(2), the field technician must record and remediate instantaneous surface emissions exceeding 500 ppmv methane. The Instantaneous SEM 500 ppmv Exceedance and Monitoring Log, located in Attachment B of the LMR Surface Emissions Monitoring Report Template must be completed for the monitoring event. The LMR Surface Emissions Monitoring Report Template is included in Appendix D of this Plan.

The field technician will record the date, time, grid and exceedance location, mark location on the SEM grid map, exceedance methane concentration, remedial action, and any additional comments.

If an exceedance of 500 ppmv methane is detected during instantaneous surface monitoring, the following procedures for monitoring and remediation will be employed:

Initial monitoring event: Any SEM reading greater than 500 ppmv methane above background will be recorded as an exceedance. The location of the exceedance will be marked and recorded. Cover maintenance or adjustments to the GCCS will be made following the initial monitoring event.

- *First 10-day re-monitoring event*: The locations where initial exceedances were detected will be re-monitored within 10 calendar days of the initial monitoring date. If the location continues to be in exceedance, it must be re-monitored within 10 calendar days. If no exceedance is detected, no further monitoring is required.
- *Second 10-day re-monitoring event:* If a location continues to be in exceedance during the first 10-day re-monitoring, the location must be re-monitored again within 10 calendar days. If no exceedance is detected, no further monitoring is required. Additional corrective action will be taken following the second 10-day re-monitoring.
    - If the second 10-day re-monitoring shows an exceedance (which is considered three times within a quarterly period), a new well or other collection device shall be installed within 120 calendar days of the initial exceedance. An alternative remedy to the exceedance, such as upgrading the blower, header piping or control device, and a corresponding timeline for installation may be submitted to the EO for approval.

The following ACO requests are approved for instantaneous SEM readings greater than 500 ppmv:

ACO Summary Description	Date Approved
The District will allow additional time for re-monitoring in cases where the area is dangerous or cannot be safely reached.	August 7, 2012
The District will allow other modifications than just additional wells, as appropriate, to correct exceedances. A corresponding alternative compliance timeline beyond 120 days will be allowed, as appropriate.	August 7, 2012

The ACO requests are included in Appendix A, PCAPCD Correspondence. Detailed ACO requirements are included within Appendix B, Approved Alternative Compliance Options Summary.

2.3 Integrated SEM Requirements

2.3.1 Integrated SEM Procedures

Prior to initiating the integrated SEM monitoring event, the field technician will:

- Confirm the surface of the landfill is dry enough to traverse safely and there has been no measured precipitation within the past 24 hours, per the approved ACO (see Section 2.1.3);
- Check the wind speed using a hand-held anemometer. The wind speed will be measured and recorded to ensure the 15-minute averaged speed does not exceed 10 mph or the instantaneous wind speed does not exceed 20 mph, per the approved ACO (See Section 2.1.3);
- Assess the monitoring grids, locate grid boundaries, and on the SEM map identify all inaccessible areas;
- Assemble the sampling unit and calibrate the monitoring equipment (see Section 2.3.2); and
- Establish background methane concentrations by waving the wand of the FID upwind and downwind outside the boundary of the landfill from a distance of at least 30 meters from perimeter wells.

During the integrated SEM monitoring event, the field technician will employ the following procedures:

- For each monitoring grid, the field technician will follow the traverse walking path and hold the monitoring probe no more than three inches above the landfill surface;
- Continuously record the wind speed using the onsite anemometer and check the instantaneous wind speed periodically with a hand-held anemometer to ensure instantaneous wind speed does not exceed 20 mph, per the approved ACO;
- While walking, the probe should be slowly moved from side to side to cover a path of four to six feed wide (approximately two to three feet on each side);
- Any areas where visual observations indicate elevated concentrations of LFG, such as distressed vegetation and cracks or seeps in the cover, will be visually inspected and monitored;
- If the pace is interrupted for more than 10 to 15 seconds, the data logging should be paused and the cause should be noted on recordkeeping forms; and
- Record the average methane concentration for each grid as well as any re-test dates and results (See Sections 2.3.3 and 2.3.4).

Alternative procedures required prior to integrated SEM may be allowed following approval of an ACO request, as described in Section 2.1.1. The following ACO requests are approved for procedures required prior to integrated SEM:

ACO Summary Description	Date Approved

The ACO requests are included in Appendix A, PCAPCD Correspondence. Detailed ACO requirements are included within Appendix B, Approved Alternative Compliance Options Summary.

2.3.2 Integrated SEM Monitoring Equipment

Similar equipment used in instantaneous monitoring will be used for the integrated monitoring. The meter used will be capable of averaging the methane readings collected across each grid to obtain the integrated reading.

2.3.3 Integrated SEM Results Below 25 PPMV

Per CCR Title 17 §95471(c)(3)(A), the field technician must record the average methane concentration for each grid. The Integrated Surface Monitoring Grid Log, located in Attachment B of the LMR Surface Emissions Monitoring Report Template must be completed for the monitoring event. The LMR Surface Emissions Monitoring Report Template is included in Appendix D of this Plan. The Log must include the average methane concentration for each grid. Grids with methane concentrations greater than 25 ppmv methane must be recorded on a separate exceedance log, as discussed in Section 2.3.4.

Alternatives for integrated SEM exceedances below 25 ppmv methane may be allowed following approval of an ACO request. See Section 2.1.1 for additional information. The following ACO requests are approved for integrated SEM procedures:

ACO Summary Description	Date Approved

The ACO requests are included in Appendix A, PCAPCD Correspondence. Detailed ACO requirements are included within Appendix B, Approved Alternative Compliance Options Summary.

2.3.4 25 PPMV Integrated SEM Exceedances

In accordance with CCR Title 17 §95471(c)(3), the field technician must record and remediate grids containing integrated surface emissions exceeding 25 ppmv on average. The Integrated SEM 25 ppmv Exceedance and Monitoring Log, located in Attachment B of the LMR Surface Emissions Monitoring Report Template must be completed for the monitoring event. The LMR Surface Emissions Monitoring Report Template is included in Appendix D of this Plan.

The field technician will record the date, time, grid number, mark location on the SEM grid map, average methane concentration for each grid, remedial action, and any additional comments.

If an exceedance of 25 ppmv methane is detected during integrated surface monitoring, the following procedures for monitoring and remediation will be employed:

- *Initial monitoring event:* Any detection of 25 ppmv or more will be recorded as an exceedance. Cover maintenance or adjustments to the GCCS will be made following the initial monitoring event.
- *First 10-day re-monitoring event*: The grid where initial exceedances were detected will be re-monitored within 10 calendar days of the initial monitoring date. If the grid continues to be in exceedance, it must be re-monitored within 10 calendar days. If no exceedance is detected, no further monitoring is required.
- *Second 10-day re-monitoring event:* If a grid continues to be in exceedance during the first 10-day re-monitoring, the grid must be re-monitored again within 10 calendar days. If no exceedance is detected, no further monitoring is required. Additional corrective action will be taken following the second 10-day re-monitoring.
    - If the second 10-day re-monitoring shows an exceedance (which is considered three (3) times within a quarterly period), a new well or other collection device shall be installed within 120 calendar days of the initial exceedance. An alternative remedy to the exceedance, such as upgrading the blower, header pipes or control device, and a corresponding timeline for installation may be submitted to the EO for approval.

The following ACO requests are approved for integrated SEM procedures:

ACO Summary Description	Date Approved
The District will allow additional time for re-monitoring in cases where the area is dangerous or cannot be safely reached.	August 7, 2012
The District will allow other modifications than just additional wells, as appropriate, to correct exceedances. A corresponding alternative compliance timeline beyond 120 days will be allowed, as appropriate.	August 7, 2012

The ACO requests are included in Appendix A, PCAPCD Correspondence. Detailed ACO requirements are included within Appendix B, Approved Alternative Compliance Options Summary.

LIMITATIONS

The work product included in the attached was undertaken in full conformity with generally accepted professional consulting principles and practices and to the fullest extent as allowed by law we expressly disclaim all warranties, express or implied, including warranties of merchantability or fitness for a particular purpose. The work product was completed in full conformity with the contract with our client and this document is solely for the use and reliance of our client (unless previously agreed upon that a third party could rely on the work product) and any reliance on this work product by an unapproved outside party is at such party's risk.

The work product herein (including opinions, conclusions, suggestions, etc.) was prepared based on the situations and circumstances as found at the time, location, scope and goal of our performance and thus should be relied upon and used by our client recognizing these considerations and limitations. Cornerstone shall not be liable for the consequences of any change in environmental standards, practices, or regulations following the completion of our work and there is no warrant to the veracity of information provided by third parties, or the partial utilization of this work product. Cornerstone is not responsible for the impacts of any changes in information, site operations or methods that may change in the future.

APPENDIX A
PCAPCD CORRESPONDENCE

Placer County
AIR POLLUTION CONTROL DISTRICT

110 Maple St., Auburn, CA 95603 • (530) 745-2330 • Fax (530) 745-2373 • www.placer.ca.gov/apcd

Thomas J. Christofk, Air Pollution Control Officer

August 7, 2012

Mr. Keith J. Schmidt, P.E.
Western Placer Waste Management Authority
11476 C Avenue
Auburn, CA 95603

Subject: District Response to Proposed Exceptions to SEM Plan

Dear Mr. Schmidt:

The following responds to the proposed alternative compliance options for the Western Regional Sanitary Landfill.

1) Areas Excluded from Collection and Surface Emission Monitoring (SEM)
CCR 95464(a)(1)(F)(1) allows the exclusion of areas containing only asbestos-containing waste, inert waste, or non-decomposable waste.

Placer County Air Pollution Control District (District) accepts and allows the clarifications made in the proposal.

2) Areas Excluded from SEM Where Safety Issues Exist
CCR 95471(c)(1) requires that SEM activities be conducted over the entire landfill surface.

The District accepts and allows the exclusion of areas as described in the proposal. Specifically, the use of 25% slope is allowed.

3) Methane Destruction Compliance Parameter – Flares
CCR 95464(b)(2)(A)(4) requires that an enclosed flare operated as a control device be operated within the parameter ranges established during the initial or most recent source test.

The District believes that it is reasonable that there be a tolerance on the flare operating temperature. If the last source test were used as the minimum operating temperature, then the allowable flare temperature would continually ratchet up with subsequent flare tests. The District accepts the requested 50 degree F below source test request.

However, flare temperature is not the only compliance parameter. The methane destruction efficiency of at least 99 percent by weight of 95464(B)(2)(A)(1) must be demonstrated by annual or triennial source test. The District plans to amend your flare permits to include the annual methane destruction test.

4) Source Test Methods

As specified in CCR 95464(b)(4), annual compliance testing of the control devices specifies the use of the test methods identified in CCR 95471(f), as follows: USEPA Methods 18, 25, 25A, or 25C.

The District intends to add to the flare permits the 99 percent methane destruction requirement and use the test methods required in the permits. So the SEM should state that the test methods are called out in the permits.

The Landfill Regulation requires flare testing annually until the destruction limit is achieved three years consecutively, and then the testing frequency can be extended to three years. The testing frequency in the District permits is biennially. Once the three consecutive years of meeting the methane destruction requirement is achieved, we intend to require the methane testing biennially with the other flare testing.

5) Timeline for Leak Repairs

CCR 95468(a)(2) allows additional time for leak repairs at landfills with procurement and delivery delays for necessary parts to complete the repair, or adverse weather conditions that impede work.

WPWMA seems to be requesting a blanket ACO for times when requirements cannot be implemented within the timeline due to procurement or weather issues. This request is denied. The District prefers to initially have these requests be made specific to the individual incident. If there are numerous repetitive incidents, the District may consider a blanket ACO for this particular situation.

6) SEM Procedures

CCR95469(a) requires that owners or operators of landfills with a GCCS conduct instantaneous and integrated SEM quarterly using the procedures specified in CCR 95471(c).
Article 95471(c) does not specify whether the instantaneous and integrated SEMs are to be done individually or simultaneously. Either way is acceptable to the District as long as the SEM meets the requirements of the article.

7) Re-monitoring After Instantaneous and Integrated Exceedances

CCR95469(a)(1)(B) and (a)(2)(B) require corrective action be taken by the owner or operator such as, but not limited to, cover maintenance or repair, or well vacuum adjustments and location re-monitored within ten calendar days of a measured excedance of the instantaneous and/or integrated surface emission standards.

The District will allow additional time for re-monitoring in cases where the area is dangerous or cannot be safely reached, as requested.

8) SEM Remediation after Third Instantaneous and/or Third Integrated SEM Excedance

CCR 95469(a)(1)(B)(2) and (a)(2)(B)(2) require the installation of a new or replacement well within 120 calendar days of detecting a third excedance of the Instantaneous SEM limit of CCR 95465(a)(1) and/or the Integrated SEM limit of CCR 95465(a)(2).

The District will allow other modifications than just additional wells, as appropriate, to correct excedances. A corresponding alternative compliance timeline beyond 120 days will be allowed, as appropriate.

9) SEM Monitoring Height

CCR 95471(c)(1)(A) requires that SEM be conducted by holding the probe within three (3) inches of the landfill surface while traversing the grid.

If an area not clear of surface vegetation cannot be found in the walking path, the District will allow the top of the vegetation to be considered the landfill surface and the probe be held within three inches vertical of the vegetation surface.

10) Wellhead Pressure Requirements

CCR 95469(c) requires corrective action if monthly wellhead pressure monitoring results in a positive pressure reading except as exempted in CCR 95464(d) (well raising) and CCR 95464(e) (temporary shutdown in order to repair the components, due to catastrophic events such as earthquakes, to connect new LFG collection system components to the existing system, to extinguish landfill fires, or to perform construction activities.)

The WPWMA is requesting to allow temporary exemption from well head pressure requirements due to potential subsurface oxidation, well damage, poor LFG quality, or other reasons as documented by the WPWMA not listed in 95469. The District will allow these additional exemptions provided the event is described to the District in writing and the District concurs.

11) Wellhead Pressure Exceedance Corrective Action

CCR 95469(c)(2) requires further corrective actions be initiated, including, but not limited to, any necessary expansion of the GCCS, to correct any positive pressure readings if positive pressure readings cannot be corrected within 15 days after the initial positive pressure reading. CCR 95469(c)(3) requires corrective action, including any necessary expansion of the GCCS, to correct any positive pressure readings within 120 days of the initial positive pressure reading.

The District will consider requests for alternative engineering solutions to be evaluated and allow an alternative timeline to consider and implement alternative solutions. This will require concurrence by the District for the engineering study and implementation.

12) Wind Speed

CCR 95471(c)(1)(C) requires that SEM be terminated when the average wind speed exceeds five miles per hour (mph) or the instantaneous wind speed exceeds 10 mph. The Executive Officer may approve alternatives to this wind speed SEM termination for MSW landfills consistently having measured winds in excess of these specified limits.

The District agrees that the landfill is located in a windy area and will accept the alternative wind speeds of 10 mph for average wind and 20 mph for instantaneous wind speed.

13) Measurable Precipitation

CCR 95471(c)(1)(D) requires that SEM be conducted only when there has been no measurable precipitation in the preceding 72 hours.

The District will allow SEM to be conducted only when there has been no measurable precipitation in the preceding 24 hours, as requested. WPWMA shall minimize the times when SEM is conducted with precipitation in the preceding 24-72 hours.

14) Source Testing Schedule

CCR 95464(b)(4) requires that annual source testing be conducted no later than 45 days after the anniversary of the initial source test.

WPWMA is requesting that the control device source test be conducted with the District source testing of the flares for the Title V permit on the timing for the Title V tests without regard to the 45 day requirement. The District denies this request. The CCR 95464(b)(4) testing is initially required annually, while the Title V testing frequency is biennially. In years when both types of testing are required, the testing can be combined and scheduled to meet the 45 day requirement.

15) Grid Area – Near Landfill Waste Boundaries

CCR 95471(c)(1) requires that the entire surface of the landfill be divided up into individually identified 50,000 square foot grids which would be used for both instantaneous and integrated SEM.

Since landfills are not sized in 50,000 square foot increments, the District will allow, along waste area boundaries and around areas that cannot be subjected to SEM due to safety reasons, grid segments that are slightly larger or smaller than 50,000 square feet.

16) Grid Sizes – Areas Excluded from SEM

See ACP (15) above.

17) Closed Areas – Reduction to Annual SEM

In accordance with CCR 95469(a)(3), an owner or operator of a closed or inactive MSW landfill, or any closed or inactive area on an active MSW landfill that can demonstrate that in the three years before the effective date of this subarticle that there were no measured excedances of the limits specified in 95465 by annual or quarterly monitoring may monitor annually.

The District will allow closed areas designated as Modules 1, 2, 10, and 11 to be tested annually. If an excedance of the limits is measured, then the testing of the affected area shall return to quarterly testing.

18) Exemption from Compliance with Sections 95464 through 95470

In accordance with 95463(b)(2)(B)(3), if there is no measured concentration of methane of 200 ppmv or greater from the surface of a closed or inactive MSW landfill, the requirements of sections 95464 through 95470 no longer apply provided that the following information is submitted to and approved by the EO within 90 days:

a. Waste-in-Place report
b. All instantaneous monitoring records.

WPWMA is requesting that Modules 1, 2, 10, and 11 be exempted from compliance with these noted sections. This request is denied at this time. The request will be granted once the measured concentration of methane does not exceed 200 ppmv for four consecutive quarters.

19) Increase in Walking Pattern Spacing

Per CCR 9547(c)(1)(B)(1) and (2), if no SEM excedances were detected in the past three years prior to the effective date (July 1, 2011) or are detected after four consecutive quarterly monitoring events, the walking pattern spacing may be increased to 100-foot intervals. If SEM excedances are detected and cannot be remediated within ten calendar days or are detected during a compliance inspection, the WPWMA must return to a 25-foot spacing interval.

No ACO is required for increasing the walking pattern spacing for grids that have had no excedances as described above. WPWMA should keep records to justify the larger walking pattern.

PROPOSED CLARIFICATIONS

1) Continuous Routing of LFG/Operation of GCCS

CCR 95464(b)(1)(A) requires that the owner or operator of a GCCCS "Route the collected gas to a gas control device or devices, and operate the gas collection and control system continuously except as provided in CCR 95464(d) and (e)".

The District will accept WPWMA's interpretation, consistent with the NSPS, that GCCS downtime of less than five days and/or control device downtime of less than one hour not be considered reportable deviations, and therefore only subject to the SSM reporting requirements.

2) Wellhead Negative Pressure Requirements

CCR 95464(c) requires that wellheads be operated under negative pressure except as noted in CCR 95464(c)(d) or (e). WPWMA's interpretation is that this applies to wells within the limit of the waste and not to perimeter wells or soil vapor extraction wells which are not in refuse and are not extracting LFG, consistent with the NSPS. The District will concur with this interpretation.

If you have any questions regarding this matter, please contact me at (530) 745-2336.

Sincerely,

Don Duffy

Don Duffy
Air Pollution Control Engineer

APPENDIX B

APPROVED ALTERNATIVE COMPLIANCE OPTIONS SUMMARY

WESTERN REGIONAL SANITARY LANDFILL
APPROVED ALTERNATIVE COMPLIANCE OPTIONS SUMMARY

Title 17 Section	Requirement	Alternative	Approval Date
95464(a)(1)(F)(1)	Any areas of the landfill that contain only asbestos-containing waste, inert waste or non-decomposable solid waste may be excluded from collection.	Any areas of the landfill that contain only asbestos-containing waste, inert waste or non-decomposable solid waste may be excluded from collection and surface emission monitoring.	August 7, 2012
95471(c)(1)	The entire landfill surface mist be divided into individually identified 50,000 square foot grids. The grids must be used for both instantaneous and integrated surface emissions monitoring.	The District accepts and allowed the exclusion of areas of greater than 25% slope.	August 7, 2012
95469(a)(1)(B) and (a)(2)(B)	For integrated and instantaneous monitoring corrective action is to be taken within ten calendar days of the measured exceedance of the SEM standards.	The District will allow additional time for re-monitoring in cases where the area is dangerous or cannot be safely reached.	August 7, 2012
95469(a)(1)(B)(2) and (a)(2)(B)(2)	For integrated and instantaneous monitoring a new or replacement will be installed within 120 days of detection of a third exceedance of the SEM limit.	The District will allow other modifications than just additional wells, as appropriate, to correct exceedances. A corresponding alternative compliance timeline beyond 120 days will be allowed, as appropriate.	August 7, 2012
95471(c)(1)(C)	Surface testing must be terminated when the average wind speed exceeds file miles per hour or the instantaneous wind speed exceeds 10 miles per hour.	The District will accept the alternative wind speeds of 10- miles per hour for average wind and 20 miles per hour for instantaneous wind speed.	August 7, 2012

Title 17 Section	Requirement	Alternative	Approval Date
95471(c)(1)(D)	Surface emissions testing must be conducted only when there has been no measurable precipitation in the preceding 72 hours.	The District will allow SEM to be conducted only when there has been no measurable precipitation in the preceding 24 hours. WPWMA shall minimize the times when SEM is conducted with precipitation in the preceding 24 to 72 hours.	August 7, 2012
95471(c)(1)	The entire landfill surface mist be divided into individually identified 50,000 square foot grids. The grids must be used for both instantaneous and integrated surface emissions monitoring.	Since landfills are not sized in 50,000 square foot increments, the District will allow along waste area boundaries and around areas that cannot be subjected to SEM due to safety reasons, grid segments that are slightly large or smaller than 50,000 square feet.	August 7, 2012
95469(a)(3)	An owner or operator of a closed or inactive MSWQ landfill, or any closed or inactive areas on an active MSW landfill that can demonstrate that in the three years before the effective date of this subarticle there were no measured exceedances of the limits…by annual or quarterly monitoring may monitor annually.	The District will allow closed areas designated as Modules 1, 2, 10 and 11 to be tested annually. If an exceedance of the limits is measured, the testing of the affected area hall return to quarterly testing.	August 7, 2012

APPENDIX C

INSTANTANEOUS AND INTEGRATED SEM EVENT MAP

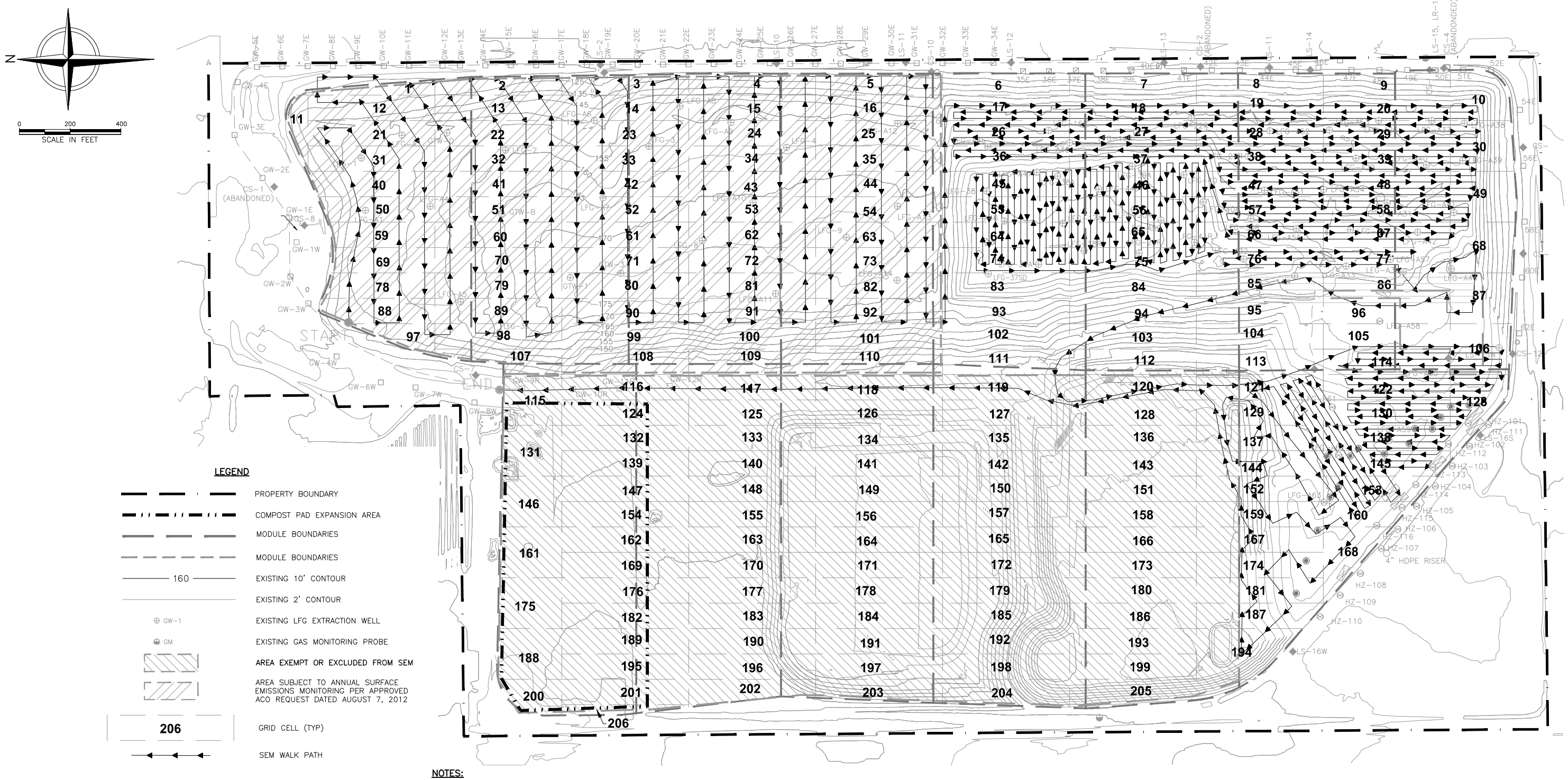

NOTES:

1. TOPOGRAPHY COMPILED BY PHOTOGRAMMETRIC METHODS BY THE BASE MAPPING COMPANY LTD. DATE OF PHOTOGRAPHY: JULY 31, 2013.
2. FEATURES, CONTOURS, AND ELEVATIONS ON THESE BASE MAPS ARE APPROXIMATE INDICATIONS OF CURRENT AND FUTURE CONDITIONS.
3. SOURCE OF 2012 AS-BUILT DATA: AMERICAN ENVIRONMENTAL GROUP LTD. SUPPLEMENTAL 2013 GCCS IMPROVEMENTS AS-BUILT PIPING AND WELL LOCATIONS PER FIELD SURVEY PERFORMED BY F3 AND ASSOCIATES, DATED NOVEMBER 20, 2013 AND NOVEMBER 25, 2013. SUPPLEMENTAL GCCS LOCATIONS, INCLUDING HORIZONTAL COLLECTORS HZ-111 THROUGH HZ-116, PER FIELD OBSERVATIONS PERFORMED IN JANUARY 2014.
4. MONITORING DATES:
5. TECHNICIANS:

REV	DATE	DESCRIPTION	DWN BY	DES BY	CHK BY	APP BY

DATE OF ISSUE 05/18/2016
DRAWN BY RAW
DESIGNED BY JR
CHECKED BY ML
APPROVED BY CWY

cornerstone environmental

PREPARED BY:
CORNERSTONE ENVIRONMENTAL GROUP, LLC

This drawing represents intellectual property of Cornerstone Environmental Group LLC. Any modification to the original by other than Cornerstone Environmental Group LLC personnel violates its original purpose and as such is rendered void. Cornerstone Environmental Group LLC will not be held liable for any changes made to this document without express written consent of the originator.

WESTERN REGIONAL SANITARY LANDFILL
PLACER COUNTY, CALIFORNIA

SURFACE EMISSION MONITORING MAP

SHEET NO. 1
PROJECT NO. 110343

File: L:\PROJECTS\PLACER COUNTY\110343 - WRSL_PROJECT DRAWINGS\SEM\2016\DBR-SEM GRID w WALK PATH.dwg Layout: SHT 1 User: russell.williams May 18, 2016 - 1:08pm
1" 1/2" 0" 1"

APPENDIX D
LMR SURFACE EMISSIONS MONITORING REPORT TEMPLATE

cornerstone
A TETRA TECH COMPANY

7600 Dublin Boulevard, Suite 200, Dublin, CA 94568
T 877.633.5520 | F 925.560.9879 | W www.cornerstoneeg.com

DATE

Mr. Keith Schmidt
Western Regional Sanitary Landfill
3033 Fiddyment Road
Roseville, CA 95648

Re: QUARTER/YEAR Landfill Methane Rule Surface Emissions Monitoring Report
Western Regional Sanitary Landfill

Dear Mr. Schmidt:

This report for the Western Regional Sanitary Landfill (WRSL) contains the results of the QUARTER/YEAR Integrated and Instantaneous Landfill Methane Rule (LMR) Surface Emissions Monitoring (SEM). This monitoring was conducted in accordance with the requirements set forth in the California Code of Regulations (CCR) Title 17, Division 3, Chapter 1, Subarticle 6 (Title 17), as mandated by Assembly Bill (AB) 32 LMR. All monitoring and reporting was completed in accordance with the LMR WRSL SEM Plan, dated May 2016, prepared by Cornerstone Environmental Group, LLC (Cornerstone).

An Alternative Compliance Option (ACO) Request was submitted to the Placer County Air Pollution Control District (PCAPCD) on February 29, 2012, per CCR Title 17 §95468(a). A formal response to the ACO request was received by the Western Placer Waste Management Authority (WPWMA) on August 7, 2012.

The following is a summary of the monitoring results completed for QUARTER/YEAR on DATE.

Instantaneous and Integrated Surface Monitoring Procedures

The surface of the WRSL disposal area has been divided into 206 monitoring grids – approximately 50,000 square feet each. The Instantaneous and Integrated SEM was conducted using a flame ionization detector (FID) which meets or exceeds all guidelines set forth in the LMR SEM CCR Title 17 §95471(a). The FID was calibrated prior to use in accordance with the United States Environmental Protection Agency (USEPA) Method 21. The Instantaneous SEM procedures followed the requirements of CCR Title 17 §95471(c)(2). The Integrated SEM was conducted using an FID with averaging capabilities to average the

methane readings measured while walking the surface of each grid. Calibration logs were completed by the field technician performing the SEM and a copy of the calibration forms are included in Appendix A of this report.

Weather Conditions during Monitoring

The wind speed was recorded and averaged in 15-minute intervals using an onsite anemometer with a continuous recorder for the entire duration of the monitoring event. Pursuant to the approved ACO request, if the average wind speed exceeded 10 miles per hour (mph), or the instantaneous wind speed exceeded 20 mph, surface testing was terminated until the wind speed decreased and was within the acceptable limits. During these monitoring events, the instantaneous and integrated wind speeds were within the required limits. Pursuant to the approved ACO request, surface monitoring was not conducted within 24 hours of measureable precipitation. Weather data collected during surface monitoring is available onsite, upon request.

Instantaneous Surface Monitoring

Field personnel walked the surface of the Landfill following the walking pattern as depicted in Attachment C, which traverses each monitoring grid. Pursuant to the approved ACO areas of the Landfill slopes greater than 14 degrees (25 percent) and areas only containing asbestos-containing waste, inert waste and/or non-decomposable waste were not monitored. As allowed by CCR Title 17 §95466, areas of the Landfill with active operations and areas of the landfill surface where the landfill cover materials have been removed and refuse has been exposed for the purpose of installing, expanding, replacing, or repairing components of the landfill gas, leachate or gas condensate collection and removal system, were excluded.

While walking, the wand tip of the FID was held within three (3) inches of the landfill surface while traversing the grid. Per an approved ACO request, the wand tip of the FID was held within 3 inches of vegetation in areas where the landfill surface is covered with low-lying vegetation such as grasses, while traversing the grid. All instantaneous surface monitoring was performed in accordance with Title 40 Code of Federal Regulation (CFR) §60.755 (c)(3) and CCR Title 17 §95471(c).

Any instantaneous surface readings of methane over 500 parts per million by volume (ppmv) methane were recorded and marked on the SEM Map, and Exceedances and Monitoring Log (Appendix B) and flagged for remediation. Any instantaneous surface readings of methane from (and including) 200 to 500 ppmv were recorded and marked on the SEM Map and the Exceedances and Monitoring Log (Appendix B). Readings between 200 to 500 ppmv are not an exceedance of CCR Title 17 §95465(a)(1-2), therefore no further action is required. The SEM Map is included in Appendix C of this report. WRSL personnel were informed of the SEM results immediately following monitoring.

Results of QUARTER/YEAR Instantaneous SEM

Readings between 200 ppmv and 500 ppmv Methane

There were INSERT readings between 200 ppmv and 500 ppmv methane detected during the initial monitoring event conducted on DATE. See Appendix B, Instantaneous SEM 200 ppmv Methane Readings and Monitoring Log, for details. Pursuant to CCR Title 17 §95471(c), instantaneous surface emissions exceeding 200 ppmv but below 500 ppmv methane are required to be recorded, however no remedial action is required.

500 ppmv or Higher Methane Exceedances

There was INSERT exceedance, in Grid #, of 500 ppmv methane detected on DATE. See Appendices B and C, Instantaneous SEM 500 ppmv Methane Exceedances and Monitoring Log, and SEM Map, for details.

[***If no exceedances detected:*** *Since there were no location with exceedances detected during the initial monitoring event, ten-day re-monitoring and thirty-day follow-up monitoring events were not required.]*

First Ten-day Re-monitoring Results

The first ten-day re-monitoring event was completed on DATE. Upon re-monitoring, Grid # was found to be in compliance of 500 ppmv methane.

[***If no exceedances detected:*** *No exceedances (methane readings above 500 ppmv) were detected during this monitoring event.]*

Second Ten-day Re-monitoring Results

On DATE, field personnel completed a 30-day follow-up monitoring of the exceedance of 500 ppmv methane in Grid # in accordance with the LMR SEM Regulations. Results indicated that no further exceedance of the 500 ppmv limit remained.

Integrated Surface Monitoring

Field personnel walked the surface of the Landfill following the walking pattern which traverses each monitoring grid, as depicted in Appendix C. Pursuant to the approved ACO areas of the Landfill slopes greater than 14 degrees (25 percent) and areas only containing asbestos-containing waste, inert waste and/or non-decomposable waste were not monitored. As allowed by CCR Title 17 §95466 areas of the Landfill with active operations and areas of the landfill surface where the landfill cover materials have been removed and refuse has been exposed for the purpose of installing, expanding, replacing, or repairing components of the landfill gas, leachate or gas condensate collection and removal system, were excluded.

The integrated surface sampling equipment consisted of an FID which meets or exceeds all guidelines set forth in the CCR Title 17 §95471(a). The FID was calibrated prior to use in accordance with the USEPA Method 21. The FID averaged the methane readings observed while walking the surface of each grid. During sampling, the probe was held within 3 inches of the landfill surface and any vegetation in areas where the landfill surface is covered with low-lying vegetation, as allowed by the approved ACO request.

The field technician traversed the grid walking path at a pace of approximately 100 feet per minute. Grids with results greater than 25 ppmv methane were recorded, marked on the SEM map, and flagged for remediation. The SEM Map is included in Appendix C of this report. WRSL personnel were informed of the SEM results immediately following monitoring.

Results of QUARTER/YEAR Integrated SEM

The average methane concentration of each grid was recorded during the monitoring event. See Appendix C, Integrated Surface Monitoring Grid Log.

There were INSERT grids (Grids #, #, and #) with exceedances of 25 ppmv or higher methane detected during the initial monitoring event conducted on DATE.

[***If no exceedances detected:*** *Since there were no location with exceedances detected during the initial monitoring event, no further monitoring is required.]*

See Appendices B and C, Integrated SEM 25 ppmv Exceedances and Monitoring Log, and SEM Map, for details.

First Ten-day Re-monitoring Results

The first ten-day re-monitoring event was completed on DATE.

If exceedances detected: Upon re-monitoring, all INSERT grids remained in exceedance of 25 ppmv methane.

Second Ten-day Re-monitoring Results

The second ten-day re-monitoring event was completed on DATE.

[***If no exceedances detected:*** *No exceedances (methane readings above 25 ppmv) were detected during this monitoring event.]*

If exceedances detected: All INSERT grids continued to be in exceedance of 25 ppmv methane.

Pursuant to CCR Title 17 §95469(a)(2)(B)(2), the owner and operator must install a new or replacement well as determined to achieve compliance no later than 120 calendar days after detecting the third exceedance. However, in accordance with the approved ACO, the District will allow other modifications than just additional wells such as upgrading the blower, header pipes or control device, as appropriate to correct exceedances, and a corresponding alternative compliance timeline beyond 120 days will be allowed, as appropriate.

All monitoring was completed in accordance with the 40 CFR §60.753 (d) and the LMR SEM CCR Title 17 requirements. If you have any questions regarding this report, please do not hesitate to contact me at PHONE NUMBER.

Sincerely,

Cornerstone Environmental Group, LLC

Enclosures: Appendix A - Calibration Records
Appendix B - Exceedances and Monitoring Log
Instantaneous SEM 200 ppmv Exceedance and Monitoring Log
Integrated SEM Monitoring Grid Log
Integrated SEM 25 ppmv Exceedances and Monitoring Log
Appendix C - SEM Event Map
Instantaneous and Integrated SEM Map

APPENDIX A
CALIBRATION RECORDS

CALIBRATION PRECISION TEST RECORD

Date: _____

Expiration Date (3 months): _____

Time: _____ AM _____ PM

Instrument Make: _____ Model: _____ S/N: _____

Measurement #1:

Meter Reading for Zero Air: _____ ppm (a)

Meter Reading for Calibration Gas: _____ ppm (b)

Measurement #2:

Meter Reading for Zero Air: _____ ppm (c)

Meter Reading for Calibration Gas: _____ ppm (d)

Measurement #3:

Meter Reading for Zero Air: _____ ppm (e)

Meter Reading for Calibration Gas: _____ ppm (f)

Calculate Precision:

$$\frac{\{|(500) - (b)| + |(500) - (d)| + |(500) - (f)|\}}{3} \times \frac{1}{500} \times 100$$

Less than 0.33% (must be < than 10%)

Performed By: _____

RESPONSE TIME TEST RECORD

Date: _____

Expiration Date (3 months): _____

Time: _____ AM _____ PM

Instrument Make: _____ Model: _____ S/N: _____

Measurement #1:

Stabilized Reading Using Calibration Gas: _____ ppm
90% of the Stabilized Reading: _____ ppm
Time to Reach 90% of Stabilized Reading after switching from Zero Air to Calibration Gas: _____ seconds (a)

Measurement #2:

Stabilized Reading Using Calibration Gas: _____ ppm
90% of the Stabilized Reading: _____ ppm
Time to Reach 90% of Stabilized Reading after switching from Zero Air to Calibration Gas: _____ seconds (b)

Measurement #3:

Stabilized Reading Using Calibration Gas: _____ ppm
90% of the Stabilized Reading: _____ ppm
Time to Reach 90% of Stabilized Reading after switching from Zero Air to Calibration Gas: _____ seconds (c)

Calculate Response Time:

$$\frac{(a) + (b) + (c)}{3} =$$ _____ seconds (must be less than 30 seconds)

Performed By: _____

CALIBRATION PROCEDURE AND BACKGROUND DETERMINATION REPORT

Landfill Name: Western Regional Sanitary Landfill Date: _____

Time: _____ AM _____ PM

Instrument Make:_____ Model: _____ S/N:_____

Calibration Procedure

1. Allow instrument to internally zero itself while introducing zero air.
2. Introduce the calibration gas into the probe.

   Stable Reading = _____ppm
3. Adjust meter to read 500 ppm.

Background Determination Procedure

1. Upwind Reading (highest in 30 seconds): _____ ppm (a)
2. Downwind Reading (highest in 30 seconds): _____ ppm (b)

Calculate Background Value:

$\frac{(a) + (b)}{2}$ Background = _____ppm

Performed By: _____

APPENDIX B

EXCEEDANCES AND MONITORING LOGS

WESTERN REGIONAL SANITARY LANDFILL INSTANTANEOUS SURFACE EMISSIONS MONITORING
INSTANTANEOUS SEM 200 PPMV EXCEEDANCES AND MONITORING LOG

Grid #/Location	Brief Description	Initial Monitoring Event		Comments
		Monitoring Date/Time	Exceedance (ppmv)	

ppmv = parts per million by volume

Pursuant to CCR Title 17 §95471(c), instantaneous surface emissions exceeding 200 ppmv but below 500 ppmv are required to be recorded. No remedial action is required.

WESTERN REGIONAL SANITARY LANDFILL INSTANTANEOUS SURFACE EMISSIONS MONITORING
INSTANTANEOUS SEM 500 PPMV EXCEEDANCES AND MONITORING LOG

Grid #/ Location	Brief Description	Initial Monitoring Event		1st 10-Day Re-Monitoring Event			2nd 10-Day Monitoring Event			Comments
		Monitoring Date/Time	Exceedance (ppmv)	Monitoring Date/Time	No Exceedance <500 ppm	Exceedance >500 ppm	Monitoring Date/Time	No Exceedance <500 ppm	Exceedance >500 ppm	

WESTERN REGIONAL SANITARY LANDFILL
INTEGRATED SURFACE EMISSIONS MONITORING LOG

Grid Number	Date	Start Time	Stop Time	Average Methane Concentration (ppmv)	Comments
1					
2					
3					
4					
5					
6					
7					
8					
9					
10					
11					
12					
13					
14					
15					
16					
17					
18					
19					
20					
21					
22					
23					
24					
25					
26					
27					
28					
29					
30					

Grid Number	Date	Start Time	Stop Time	Average Methane Concentration (ppmv)	Comments
31					
32					
33					
34					
35					
36					
37					
38					
39					
40					
41					
42					
43					
44					
45					
46					
47					
48					
49					
50					
51					
52					
53					
54					
55					
56					
57					
58					
59					
60					
61					
62					
63					

Grid Number	Date	Start Time	Stop Time	Average Methane Concentration (ppmv)	Comments
64					
65					
66					
67					
68					
69					
70					
71					
72					
73					
74					
75					
76					
77					
78					
79					
80					
81					
82					
83					
84					
85					
86					
87					
88					
89					
90					
91					
92					
93					
94					
95					
96					

Grid Number	Date	Start Time	Stop Time	Average Methane Concentration (ppmv)	Comments
97					
98					
99					
100					
101					
102					
103					
104					
105					
106					
107					
108					
109					
110					
111					
112					
113					
114					
115					
116					
117					
118					
119					
120					
121					
122					
123					
124					
125					
126					
127					
128					
129					

Grid Number	Date	Start Time	Stop Time	Average Methane Concentration (ppmv)	Comments
130					
131					
132					
133					
134					
135					
136					
137					
138					
139					
140					
141					
142					
143					
144					
145					
146					
147					
148					
149					
150					
151					
152					
153					
154					
155					
156					
157					
158					
159					
160					
161					
162					

Grid Number	Date	Start Time	Stop Time	Average Methane Concentration (ppmv)	Comments
163					
164					
165					
166					
167					
168					
169					
170					
171					
172					
173					
174					
175					
176					
177					
178					
179					
180					
181					
182					
183					
184					
185					
186					
187					
188					
189					
190					
191					
192					
193					
194					
195					

Grid Number	Date	Start Time	Stop Time	Average Methane Concentration (ppmv)	Comments
196					
197					
198					
199					
200					
201					
202					
203					
204					
205					
206					

ppmv = parts per million by volume

WESTERN REGIONAL SANITARY LANDFILL INSTANTANEOUS SURFACE EMISSIONS MONITORING
INTEGRATED SEM 25 PPMV EXCEEDANCES AND MONITORING LOG

Grid #/ Location	Brief Description	Initial Monitoring Event		1st 10-Day Re-Monitoring Event			2nd 10-Day Monitoring Event			Comments
		Monitoring Date/Time	Exceedance (ppmv)	Monitoring Date/Time	No Exceedance ≤25 ppm	Exceedance >25 ppm	Monitoring Date/Time	No Exceedance ≤25 ppm	Exceedance >25 ppm	

APPENDIX C
INSTANTANEOUS AND INTEGRATED SEM EVENT MAP

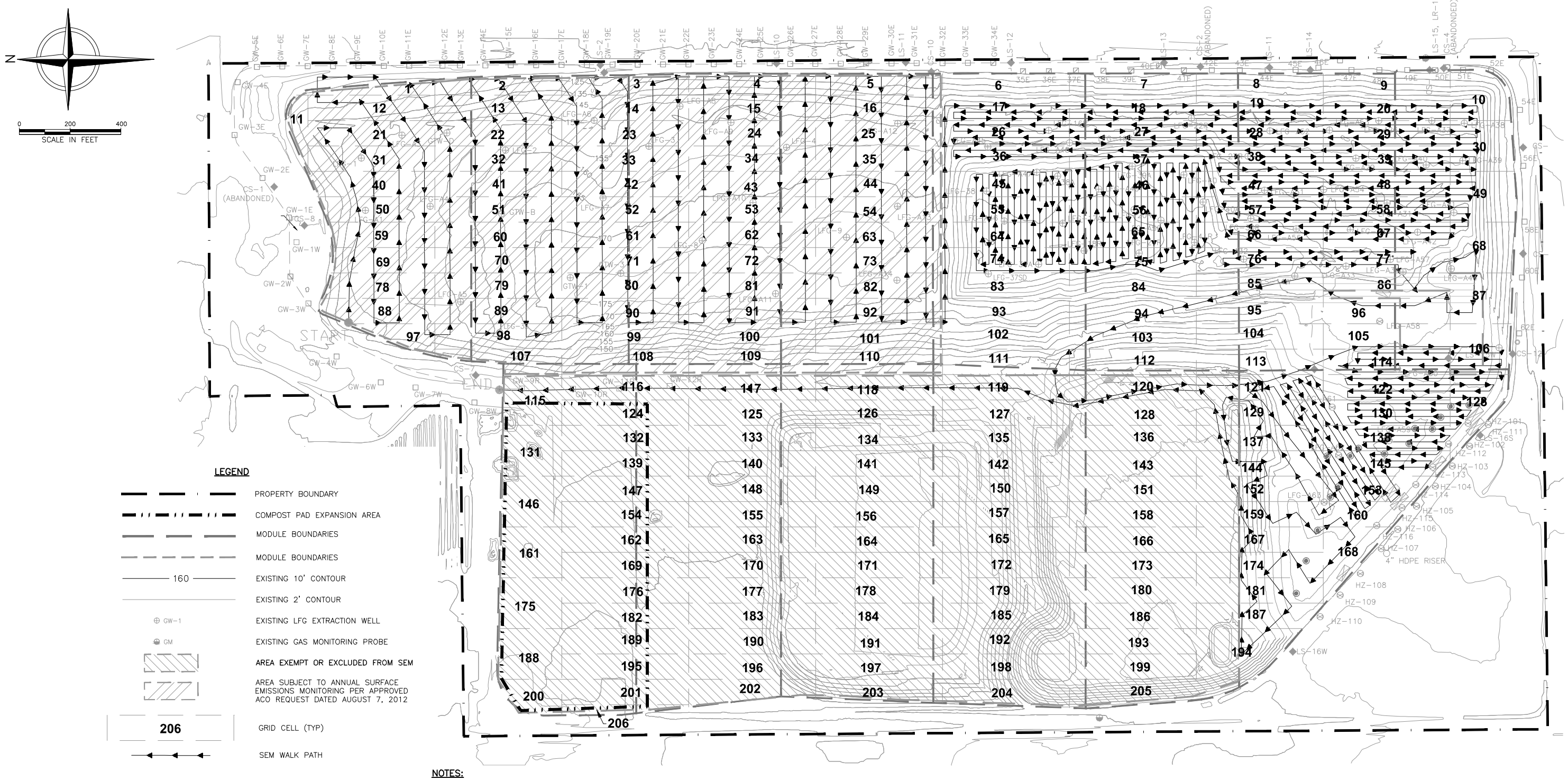

NOTES:

1. TOPOGRAPHY COMPILED BY PHOTOGRAMMETRIC METHODS BY THE BASE MAPPING COMPANY LTD. DATE OF PHOTOGRAPHY: JULY 31, 2013.
2. FEATURES, CONTOURS, AND ELEVATIONS ON THESE BASE MAPS ARE APPROXIMATE INDICATIONS OF CURRENT AND FUTURE CONDITIONS.
3. SOURCE OF 2012 AS-BUILT DATA: AMERICAN ENVIRONMENTAL GROUP LTD. SUPPLEMENTAL 2013 GCCS IMPROVEMENTS AS-BUILT PIPING AND WELL LOCATIONS PER FIELD SURVEY PERFORMED BY F3 AND ASSOCIATES, DATED NOVEMBER 20, 2013 AND NOVEMBER 25, 2013. SUPPLEMENTAL GCCS LOCATIONS, INCLUDING HORIZONTAL COLLECTORS HZ-111 THROUGH HZ-116, PER FIELD OBSERVATIONS PERFORMED IN JANUARY 2014.
4. MONITORING DATES:
5. TECHNICIANS:

REV	DATE	DESCRIPTION	DWN BY	DES BY	CHK BY	APP BY

DATE OF ISSUE 05/18/2016
DRAWN BY RAW
DESIGNED BY JR
CHECKED BY ML
APPROVED BY CWY

cornerstone environmental

PREPARED BY:
CORNERSTONE ENVIRONMENTAL GROUP, LLC

This drawing represents intellectual property of Cornerstone Environmental Group LLC. Any modification to the original by other than Cornerstone Environmental Group LLC personnel violates its original purpose and as such is rendered void. Cornerstone Environmental Group LLC will not be held liable for any changes made to this document without express written consent of the originator.

WESTERN REGIONAL SANITARY LANDFILL
PLACER COUNTY, CALIFORNIA

SURFACE EMISSION MONITORING MAP

SHEET NO. 1
PROJECT NO. 110343

File: L:\PROJECTS\PLACER COUNTY\110343 - WRSL_PROJECT DRAWINGS\SEM\2016\08IR-SEM GRID w WALK PATH.dwg Layout: SHT 1 User: russell.williams May 18, 2016 - 1:08pm
1" 1/2" 0" 1"